400 IDEAS FOR DESIGN

selected from ELECTRONIC DESIGN

1964

HAYDEN BOOK COMPANY, INC., NEW YORK

400 IDEAS FOR DESIGN

selected from ELECTRONIC DESIGN

Copyright © *1964*
HAYDEN BOOK COMPANY, INC.
All rights reserved. This book or any parts thereof may not be reproduced in any form or in any language without permission of the publisher.

Printed in the United States of America
Library of Congress Catalog
Card Number 64-18275

HAYDEN BOOK COMPANY, INC., NEW YORK
a division of HAYDEN PUBLISHING COMPANY, INC.

FOREWORD

Electronic design engineers are the true idea men of the electronic industries. They create ideas and use them in their designs, they stimulate ideas in other designers, and they borrow and adapt ideas from others. One could almost say they feed on and grow on ideas.

ELECTRONIC DESIGN has recognized this need and its editorial content has reflected this awareness. Each issue is literally a collection of useful ideas. In one section, however, special attention has been devoted to providing a forum for the exchange of ideas between readers—a section called "Ideas For Design." Here are presented clever, unique, ingenious, and often very simple ideas that readers have found useful, sometimes as parts of larger designs and sometimes as aids in measuring the parameters or testing the effectiveness of their designs. Many are quite simple "little" ideas, but experienced designers know that good little ideas make the good large design possible.

To encourage this exchange of ideas, ELECTRONIC DESIGN has been sponsoring an IFD Award program. Readers are asked to vote on the ideas they find most useful in the IFD section of ELECTRONIC DESIGN. Awards are made to the idea getting the most votes in an issue, and from the issue winners a grand prize of $1,000 is awarded for the best "Idea of the Year."

For the past four years, we have been selecting 100 of the best ideas and making them available in an annual booklet, arranged by category for the convenience of readers. Four volumes have appeared in this series, and now, in response to many requests we have combined these four volumes into a convenient, more durable book. The ideas have been rearranged under specific categories, making for a very handy reference book, suitable for a desk or library shelf.

It is difficult to categorize ideas for designers; they are often useable in situations not originally considered by the user (or the categorizer). Therefore, the reader may not agree with our choice, or worse still, he may miss a good idea because it did not appear under the category to which he felt it belonged. If the former be the case, we welcome comments and suggestions for arrangement of future volumes. To avoid the latter possibility, we suggest at least cursory perusal of all categories—you may be pleasantly surprised at what you find.

February 1964
New York

EDWARD E. GRAZDA
Editorial Director
ELECTRONIC DESIGN

CONTENTS

AMPLIFIERS

400 IDEAS FOR DESIGN

CALCULATION SHORT CUTS

COMMUNICATIONS AND TELEMETRY

COMPUTER AND PULSE CIRCUITS

CONTENTS

COMPUTER AND PULSE CIRCUITS *(cont.)*

COMPUTER AND PULSE CIRCUITS *(cont.)*

CONTROL CIRCUITS

CONTENTS

CONTROL CIRCUITS *(cont.)*

DESIGN AND LABORATORY AIDS

400 IDEAS FOR DESIGN

DESIGN AND LABORATORY AIDS *(cont.)*

FILTERS

MEASUREMENT AND TEST

CONTENTS

MEASUREMENT AND TEST *(cont.)*

MICROWAVE TECHNIQUES

OSCILLATORS AND MODULATORS

OSCILLATORS AND MODULATORS *(cont.)*

POWER SOURCES

CONTENTS

POWER SOURCES *(cont.)*

SWITCHING AND RELAY CIRCUITS

Transistor Improves Common-Mode Rejection In Difference Amplifier

In transistor differential amplifiers, Fig. 1, the common-mode rejection suffers badly if resistor *R* is made small enough to give good amplifier stabilization. A technique permitting reasonably high-operating current and high-rejection ratio, but low supply voltage was required.

Substituting a third transistor for the emitter resistor of the conventional circuit, as shown in Fig. 2, permits operation at fairly high currents. Also, it has the effect of a very large emitter resistor, since the collector characteristics of a transistor present a very high impedance to any collector load. For example, if a stage current of 5 ma is required and the emitter resistance is desired around 100 K, the conventional circuit would require a 500-v supply. Using the third transistor, it is quite easy to get the same results with a 10-v, or less, supply.

Roy P. Foerster, Group Engineer, The Martin Co., Baltimore, Md.

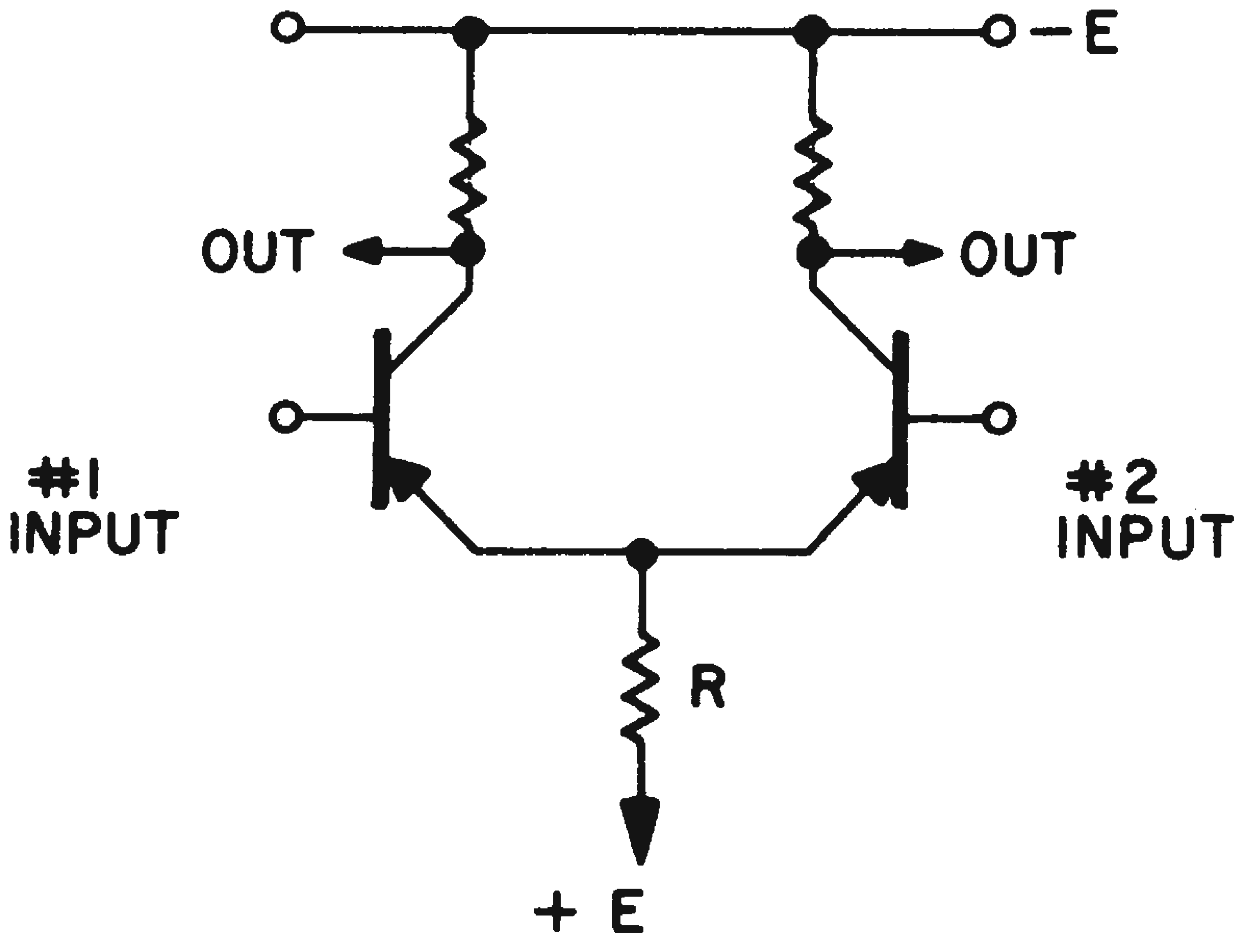

Fig. 1. Conventional differential amplifier circuit has poor common-made rejection if *R* is small enough for good stabilization.

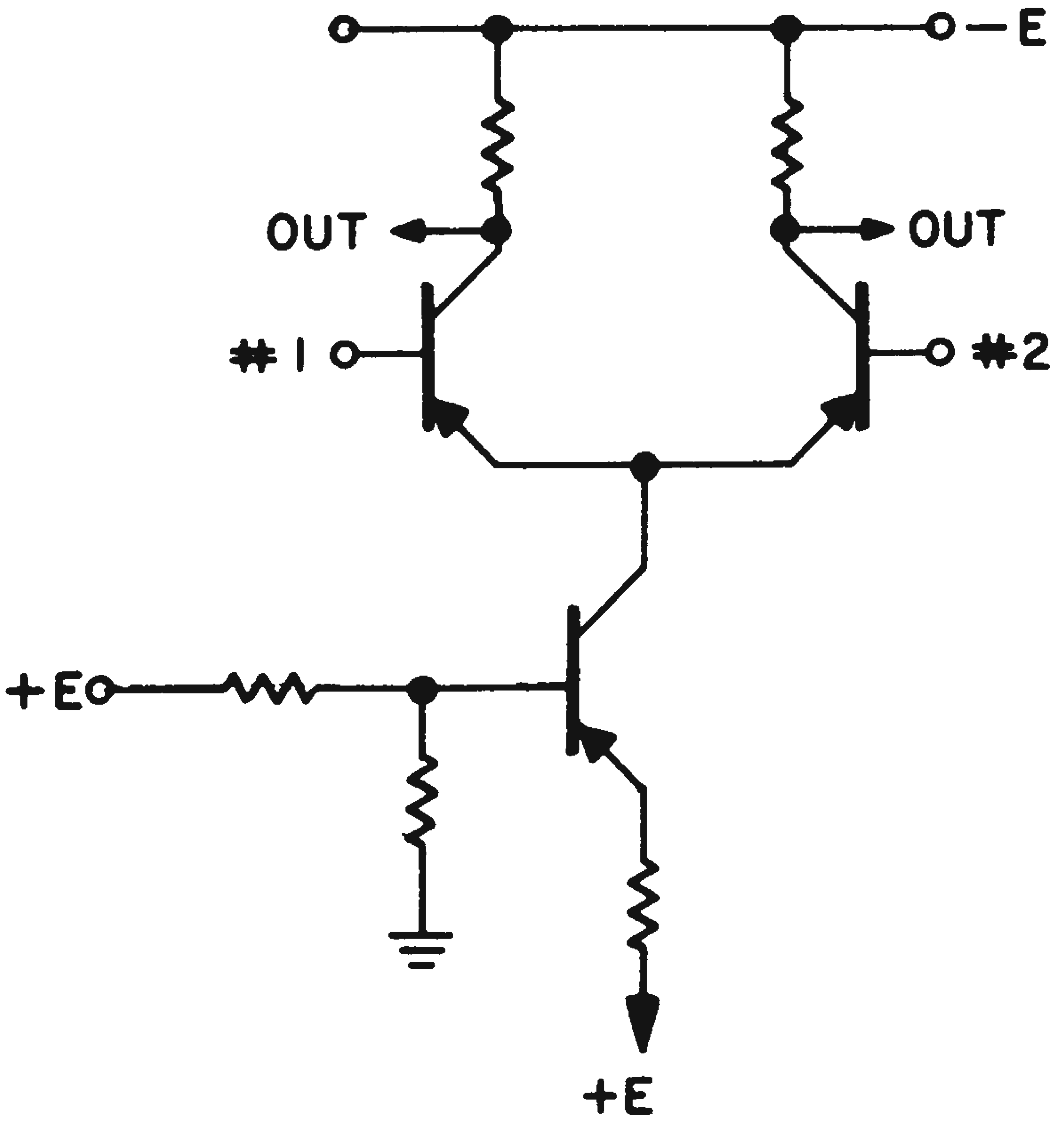

Fig. 2. Substituting a transistor for *R* allows high-current operation with an effectively large emitter resistance.

Transistor Chain Forms High Voltage Amplifier

The comparatively low collector to emitter voltage ratings of transistors limit their maximum

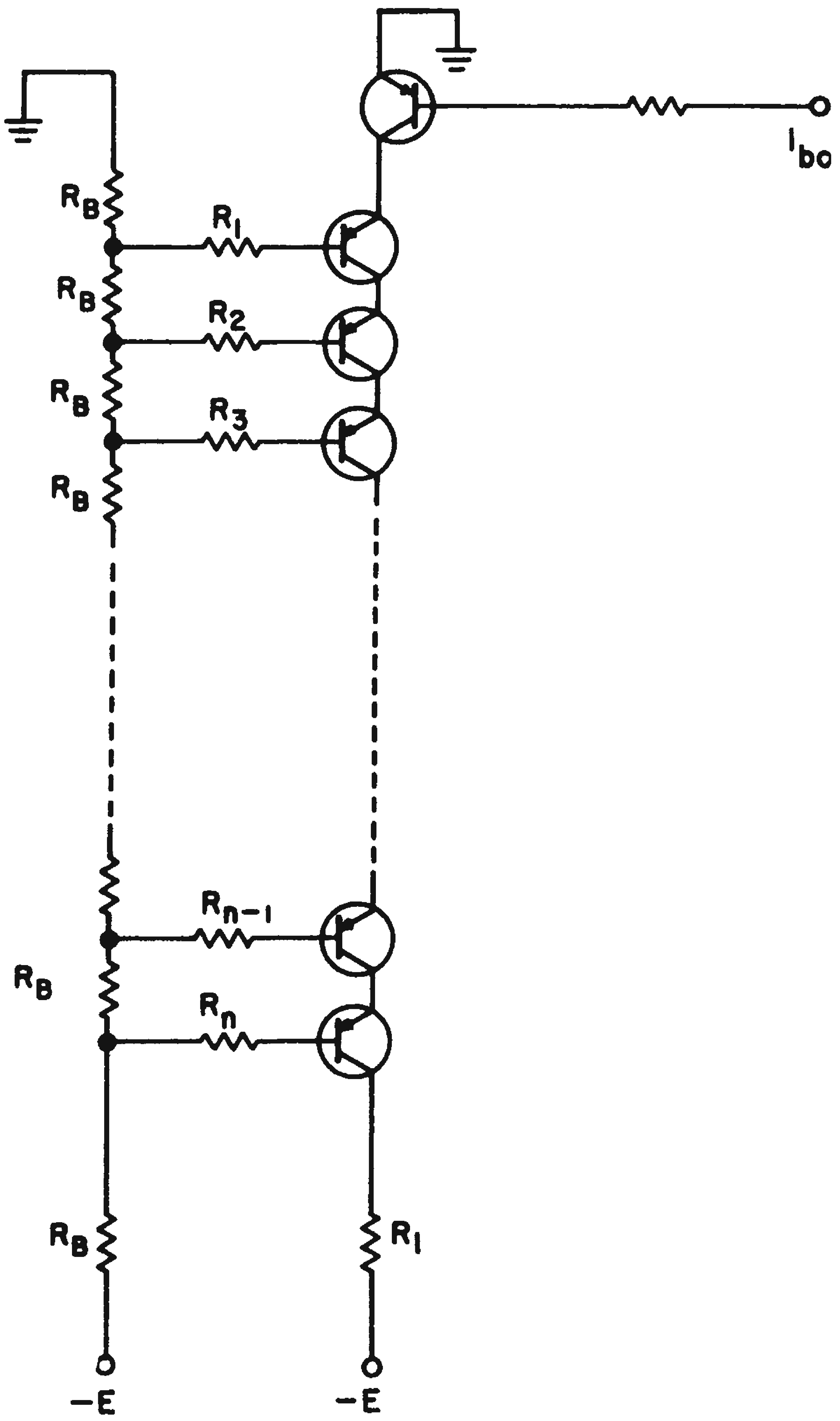

Fig. 1. This series transistor chain is equivalent to single transistor of nv_{CEmax} collector-emitter rating with a current gain of (β-*n*).

output voltage swing. However, the transistor amplifier shown here can operate with an output voltage swing of 300-400 v.

Fig. 1 shows the basic series arrangement with which the high output is obtained.

A current injected at the base of the top transistor must flow down the series string, increasing the drop across R_L and decreasing the drop across each transistor in the string. The decreased drop across each transistor is accompanied by an increase in each base current through the series base resistors. If the series base resistors are chosen so that all base current are always equal, then the expression for the output collector current is $i_L = (\beta - n)\, i_{bo}$,

where i_L = current through R_L
β = current gain of each transistor
n = number of transistors in the series string
i_{bo} = base current at input

If the injected current is removed, then each transistor is cut off and the drop across each is determined by the bleeder chain, R_B. The circuit of Fig. 1 is therefore equivalent to one transistor of nV_{CEmax} collector-emitter rating with a current gain of $(\beta - n)$.

For purposes of experiment, a 300-v supply was chosen and ten transistors (type 2N247, 35-v collector-emitter rating, $\beta = 60$) were connected in series, Fig. 2. With R_f open, this circuit is equivalent to one transistor with a 350-v collector rating and an opimum β equal to 50. R_f was added for stabilization. With R_f in the circuit the amplifier had a gain of ten, a useful output voltage swing approaching 300 v, and a frequency response flat from dc to 0.5 mc.

Linton S. Kypta, University of Illinois, Urbana, Ill.

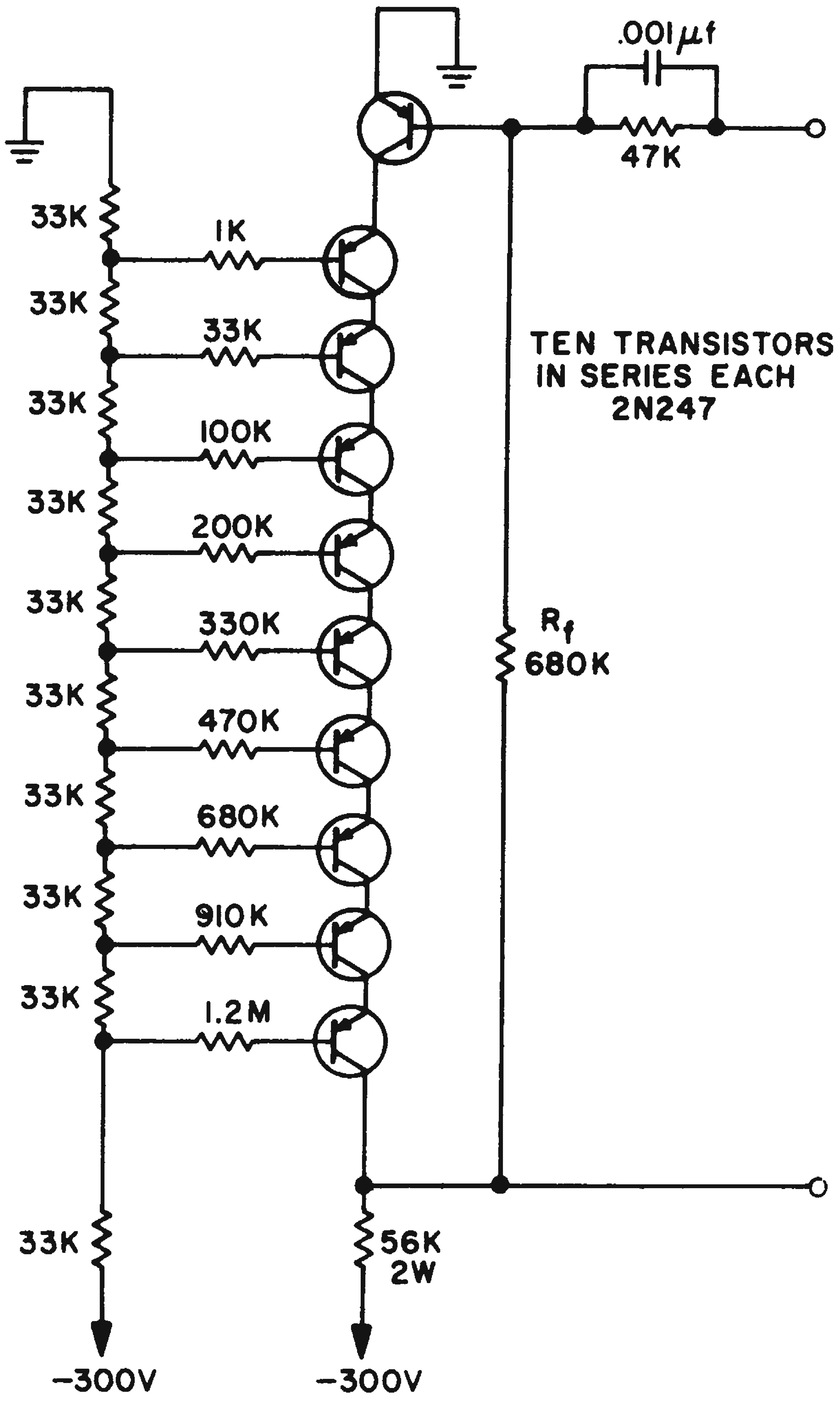

Fig. 2. Experimental circuit equivalent to one transistor with a 350-v collector rating and a β of 50.

Common-Emitter Circuit Has Emitter-Follower Characteristics

The emitter-follower circuit is most often used when a transistor amplifier with low output impedance is needed. However, a simple common-emitter circuit with a large amount of negative feedback can be used instead. The circuit shown has an output resistance of well under 1 K and a voltage gain of about 10, (depending upon the resistance of the external load).

In one application, this stage was used to drive the input transformer of a power amplifier, a case where its low output resistance was necessary. The total equivalent load resistance was 5 K and the total equivalent source resistance was approximately equal to the 2.2 K isolating re-

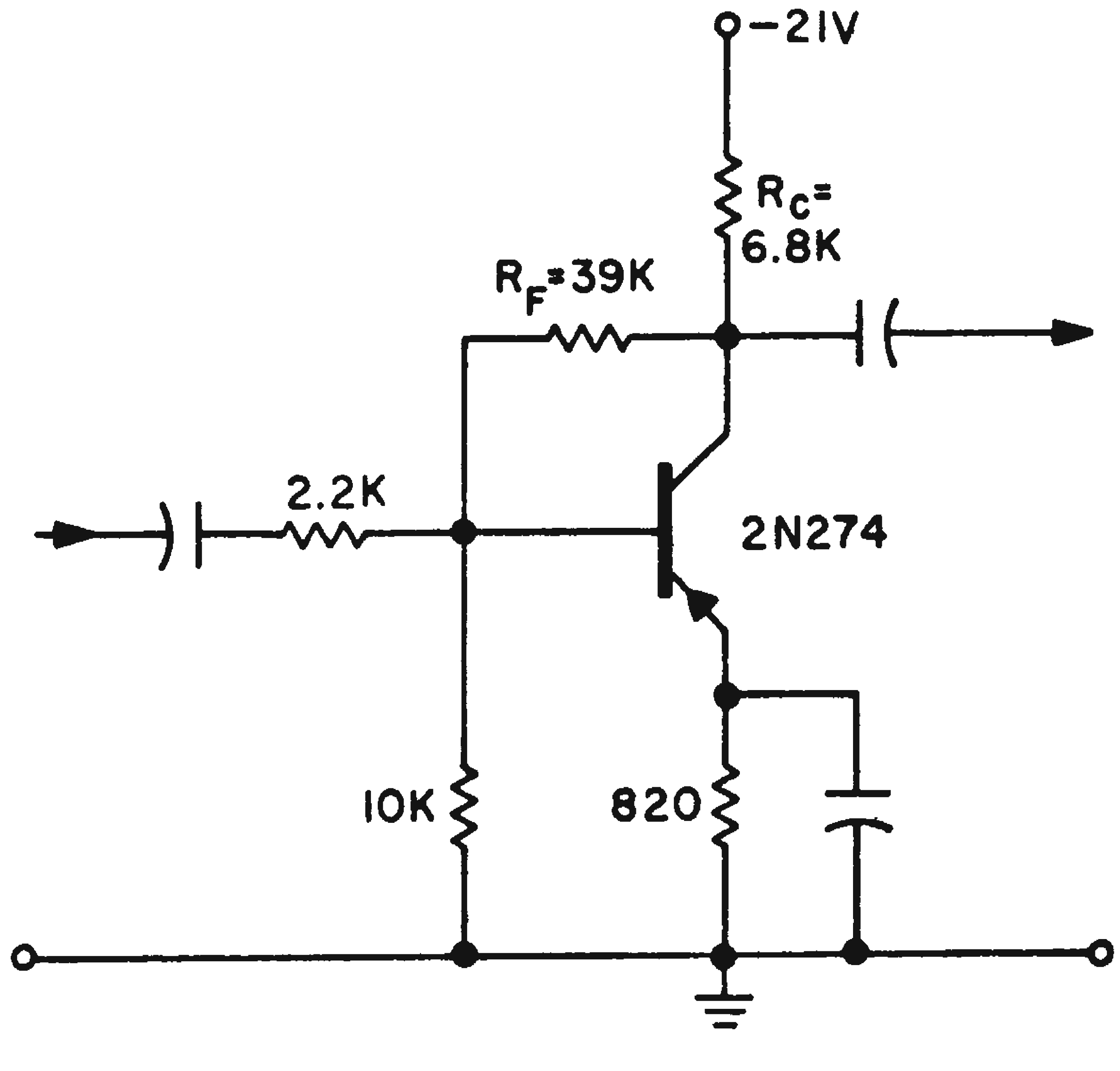

A common-emitter amplifier stage with negative feedback can have the low-output impedance of an emitter-follower configuration.

sistor. The output resistance was measured as 625 ohms and the voltage gain as measured from the input capacitor to the collector, was 14.

In a second application the total load was 875 ohms and the source resistance was 5.5 K. The output resistance was 500 ohms with a voltage gain of 7.

The isolating resistor in series with the base is necessary only when the driving stage has a low output resistance; for example, where a feedback gain-control pot is also driven from that stage.

W. R. Finley, Design Engineer, ARF Products, Inc., Raton, N. Mex.

Cascode Amplifier Stage Extends Receiving Tube Use

By combining a cascode stage with degeneration, small receiving tube types can be designed into circuits where considerations of voltage swing and power output would ordinarily preclude their use.

In the circuit shown, the feedback path to the grid of V_2 is of sufficiently low resistance to pass most of the load current when the series combination of the two tubes causes the load voltage to be at a minimum.

When, on the other hand, the load voltage is at its maximum value, and the tube voltage is at a minimum, the shunt path will contribute little current. However, tube dissipation is small due to the low voltage. Because of the series arrangement, the hold-off voltage rating is doubled.

For a typical design, $R_{s1} = R_{s2} = 1/2\, R_s$, and $K = 1/2$. Both tubes operate at substantially the same point and $\mu_1 = \mu_2 = \mu$, $r_{p1} = r_{p2} = r_p$, and $K = R_{s2}/(R_{s1} + R_{s2})$

Under these circumstances

$$G = -\frac{\dfrac{\mu\,(1+\mu)}{r_p\,(2+\mu)} \cdot \dfrac{R_s R_L}{R_s + R_L}}{1 + \dfrac{(1+K\mu)\,\dfrac{R_s R_L}{R_s + R_L}}{r_p\,(2+\mu)}}$$

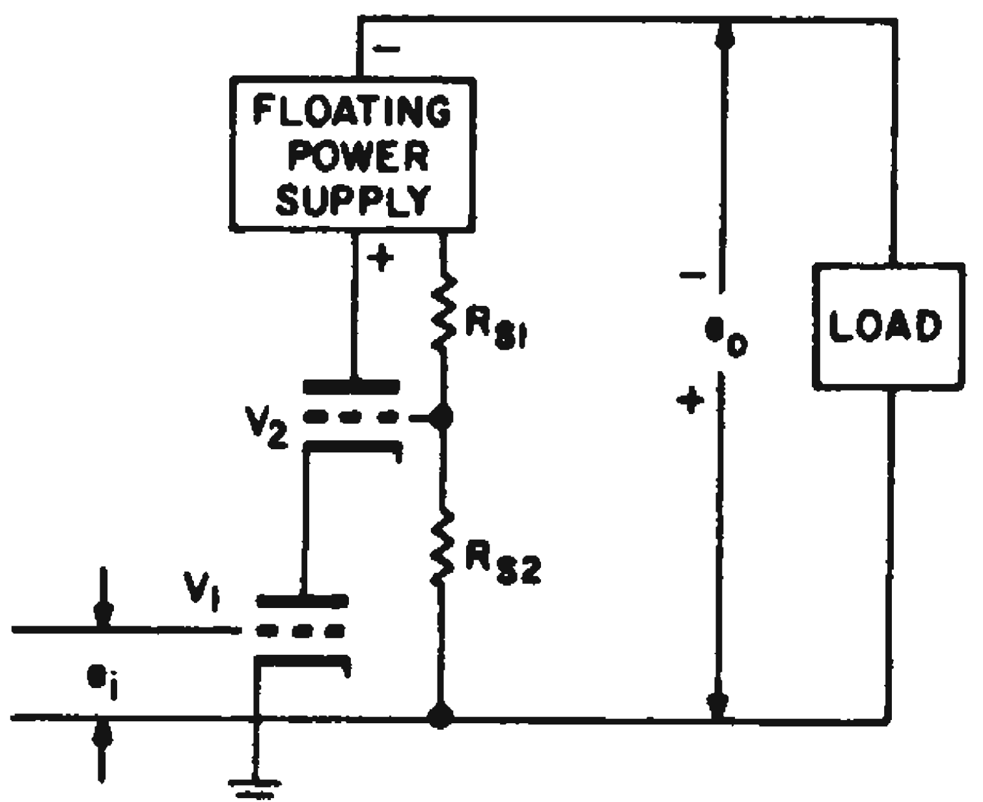

A cascode stage combined with degeneration extends receiving tube types usable in power output stages.

"*A*" = *Forward Gain*

$$= \frac{\mu\,(1+\mu)\,\dfrac{R_s R_L}{R_s + R_L}}{r_p\,(2+\mu)}$$

"*AB*" = *Feedback Return Ratio*

$$= \frac{(1+K\mu)\,\dfrac{R_s R_L}{R_s + R_L}}{r_p\,(2+\mu)}$$

For loads with a constant current characteristic, such as backward wave oscillator tubes, $R_L \to \infty$, and the gain becomes

$$G' = -\frac{\dfrac{\mu\,(1+\mu)}{r_p\,(2+\mu)} \cdot R_s}{1 + \dfrac{(1+K\mu)\,R_s}{(r_p + 2\mu)}}$$

George M. Strauss, Section Manager, The W. L. Maxson Corp., New York 18, N. Y.

Complementary Transistors Form Two-Stage, High-Gain Amplifier

Both high current and high voltage gain can be easily obtained from a two-stage transistor amplifier by using complementary transistors connected so that the second stage is prevented from loading down the first.

Ordinarily, when high power gain is sought, a two-stage amplifier with common emitter and/or emitter follower stages may fail to provide the necessary gain under load because of this loading effect. As the power output requirement is increased, the problem becomes more critical.

The difficulty becomes apparent when an amplifier with a common emitter first stage and an emitter follower second stage, Fig. 1, is considered. (The biasing network of Q_1 is not shown.) Total power gain will be reduced if R_1 is excessively loaded by $\beta_2 R_3$, where β_2 is the current gain of Q_2. As the requirement for output current increases, R_3 must be decreased. If $\beta_2 R_3$ becomes so small as to be comparable to, or even less than, R_1, the necessary gain may not be obtainable.

This loading effect is eliminated by using a pair of complementary transistors, with the collector resistor of the first stage in series with the base-to-emitter junction of the second stage. The basic circuit is shown in Fig. 2, with the biasing network of Q_1, again not shown. The emitter-de-

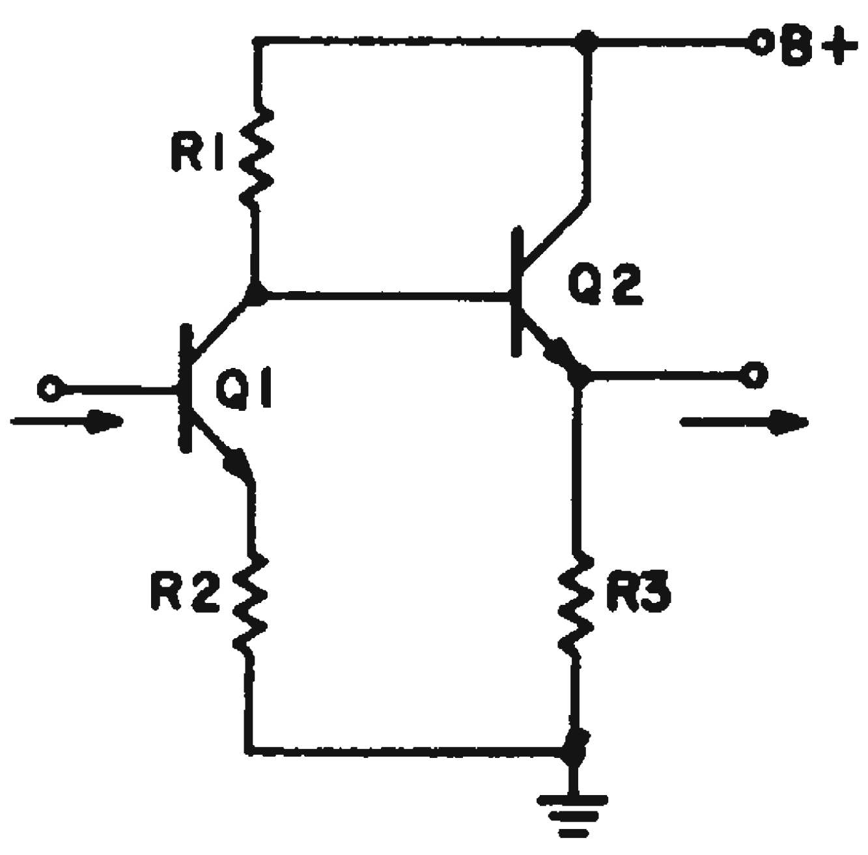

Fig. 1. High-power gain is difficult to obtain because output stage loads down, and reduces gain of first stage as output current increases.

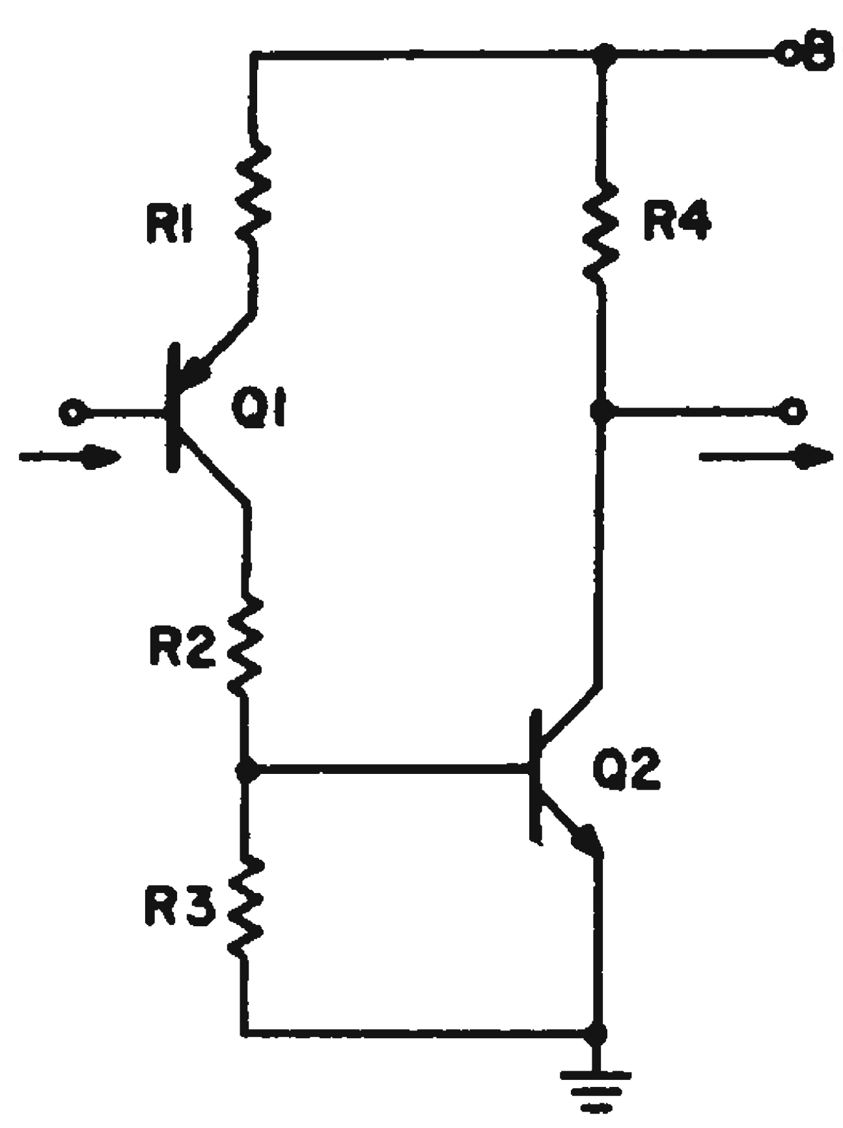

Fig. 2. Loading effect is eliminated when complementary transistors are connected with the collector resistor of first stage in series with the base-to-emitter junction of the second stage.

generating resistor, R_1, may be bypassed or shorted entirely if desired. Resistor R_2 is approximately equal to the load resistor of the first stage, and R_4, is equal to the load resistor of the second stage. R_3 is chosen so that the total collector resistance associated with the first stage does not substantially exceed R_2. Thus, in practice, $R_3 < 0.2\,R_2$.

It is also desired that a major portion of the collector current of the first stage flow through the base-to-emitter junction of Q_2. Hence R_3 must be less than R_{be2}, where R_{be2} is the equivalent base-to-emitter resistance of Q_2 in its saturated state. Therefore, as approximate design criteria, we have

$$R_3 < R_{be2}$$
$$R_2 < 5\,R_3$$

The circuit is equally applicable as a linear amplifier and as a switching amplifier, provided that the values of the resistors are chosen according to the function. Feedback stabilization may be added as desired. Also, the complementary symmetry can be arranged either with

1. Q_1, a *pnp*, Q_2 an *npn*, and a positive supply voltage, or
2. Q_1, an *npn*, Q_2 a *pnp*, and a negative supply voltage.

Finally, the output resistor R_4 may be as small as power supply and dissipation considerations permit, without noticeably affecting the signal at the collector of Q_1.

Lawrence Odess, Senior Engineer, ITT Laboratories, Nutley, N.J.

AF Tuned Amplifier Has Adjustable Bandwidth

Here's a circuit for a tuned af amplifier with adjustable bandwidth and an essentially constant gain-bandwidth product. If desired, it can be made voltage tunable by adding a single varactor diode.

The amplifier is basically of the regenerative type. Transistor Q_1 is used as a common-base amplifier. The second transistor Q_2, together with the transformer *T*, form a negative-resistance generator that reflects approximately $-R_e$ ohms into the collector circuit of Q_1. Transformer *T* can be either a center-tapped inductor or a small audio autotransformer.

Resistor R_e is the equivalent emitter-circuit resistance of Q_2 at the signal frequency. Adjustment of the potentiometer R_1, which is part of R_e, controls both the gain and bandwidth of the amplifier.

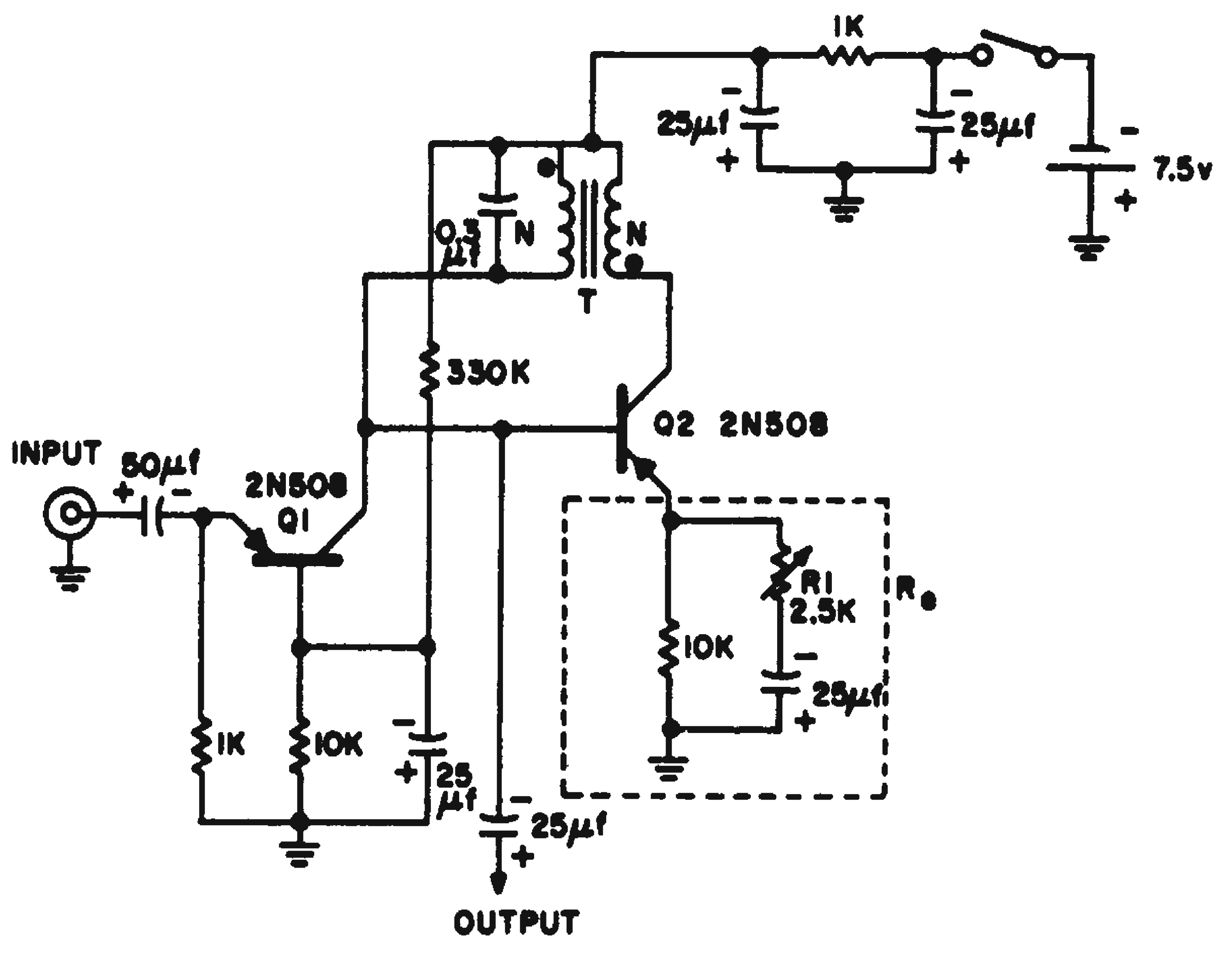

Tuned af amplifier has adjustable bandwidth and fairly constant gain-bandwidth product.

The following measurements were obtained at a center frequency of 990 cps:

Voltage gain	500	100	20
Bandwidth cps	6	35	180
Input signal μv	0.02	0.1	0.5
Signal to noise voltage	12	30	50

These results correspond to a noise figure of approximately 7 db.

Clement A. Skalski, Engineer, Norden Div., United Aircraft Corp., Norwalk, Conn.

Grounded-Grid Circuit Simplifies Microphone Input

To operate satisfactorily, carbon microphones have to have a dc bias applied to them. Thus, the conventional mike-input circuit, Fig. 1, is used. This circuit requires an input transformer and a dc source—a battery, as shown, or a resistor to $B+$.

Both the transformer and the dc source can be eliminated by using the grounded-grid circuit of Fig. 2. The dc bias is provided by the tube's plate current. Impedance matching is maintained because of the lower input impedance of the grounded grid. The values of the resistors R_1 and R_2 are given by:

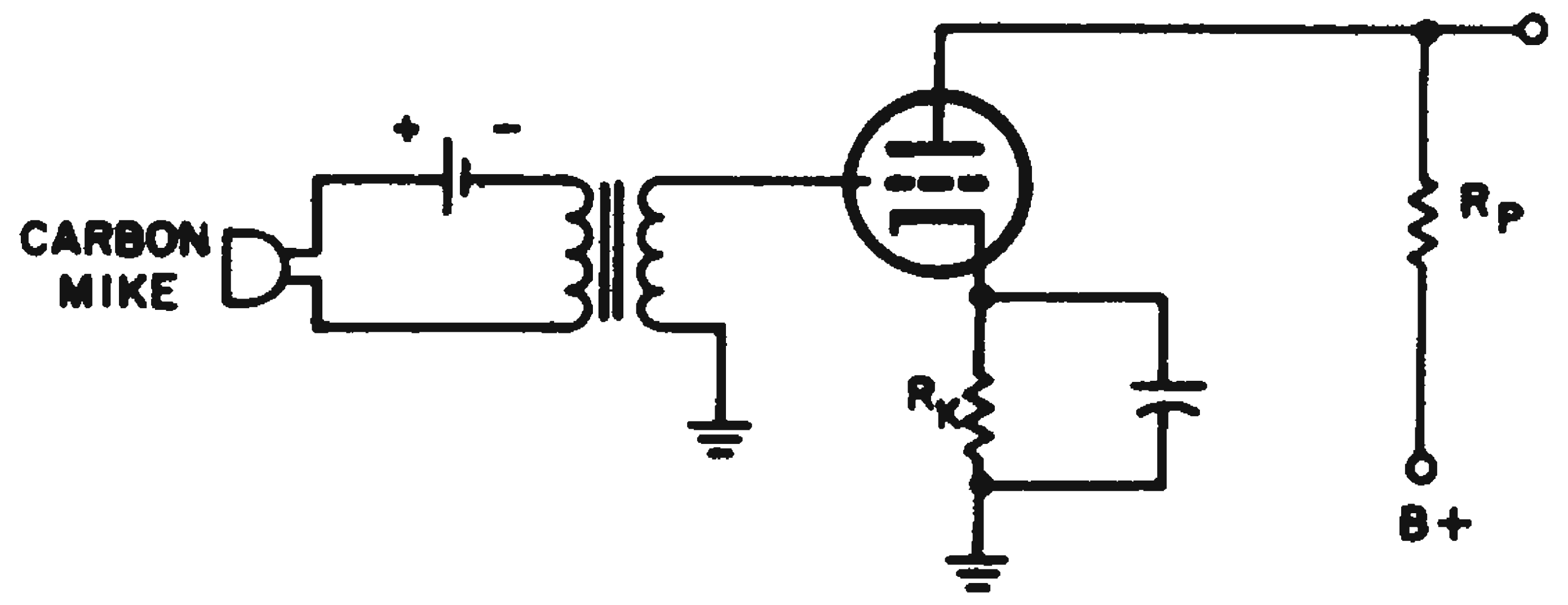

Fig. 1. Conventional carbon mike input circuit requires dc source and transformer.

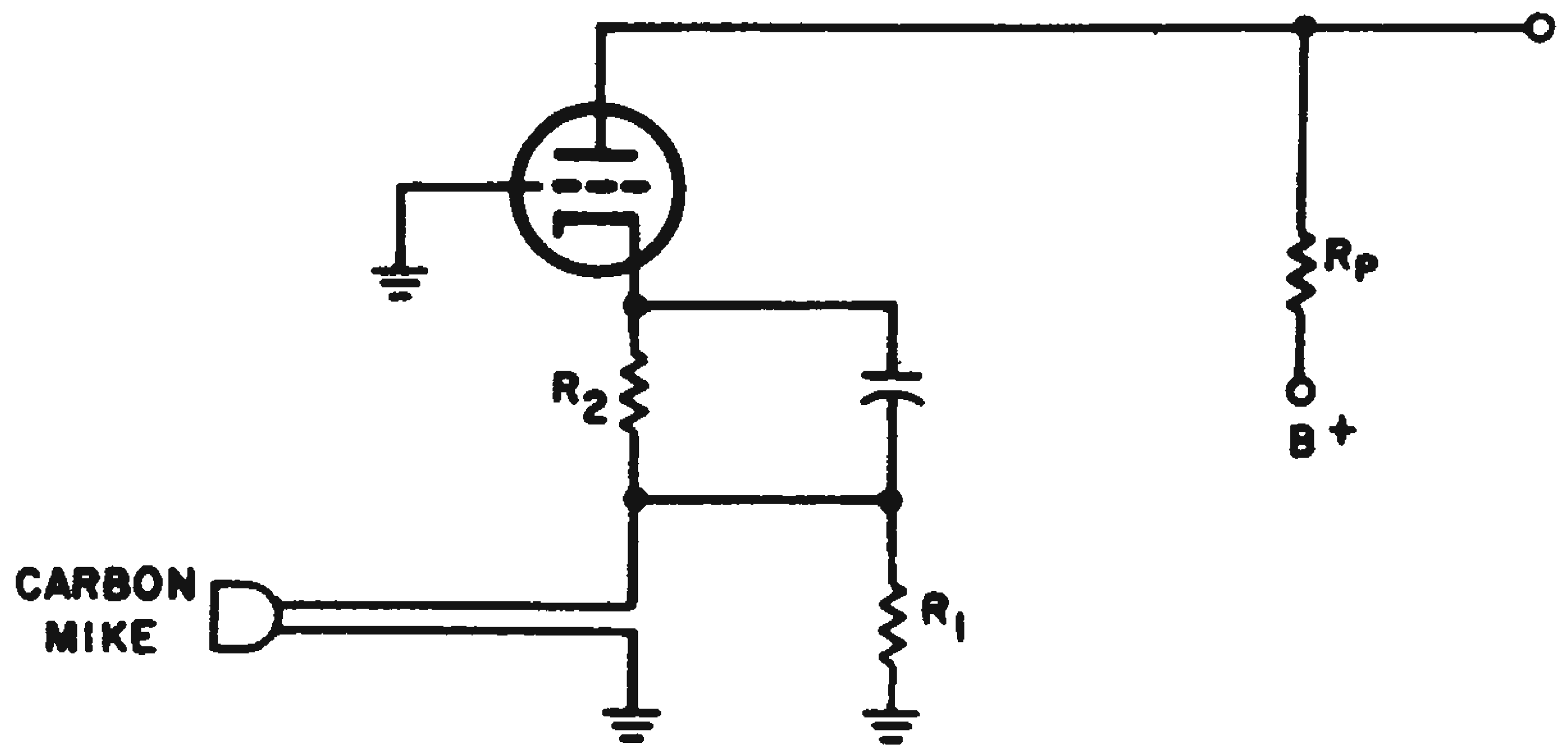

Fig. 2. Both the dc source and the transformer can be eliminated by using this grounded-grid circuit.

$$R_1 = \frac{R_m I_m}{I_p - I_m}$$

$$R_2 = R_k - \frac{R_1 R_m}{R_1 + R_m}\text{, where}$$

I_p = plate current
R_k = design value of cathode resistance
I_m = mike bias current desired
R_m = average mike resistance

D. Ivarson, Staff Scientist, Clifton Precision Products Co., Clifton Heights, Pa.

Modified Cathode Follower Dissipates Less Power

When a cathode follower drives a large capacitive load, good frequency response is maintained by using a small cathode resistor. However, if the resistor is replaced by a tube, as shown in the figure, the frequency response is still extremely good, while considerably less power is dissipated. In effect, the additional tube is used as an active cathode resistor.

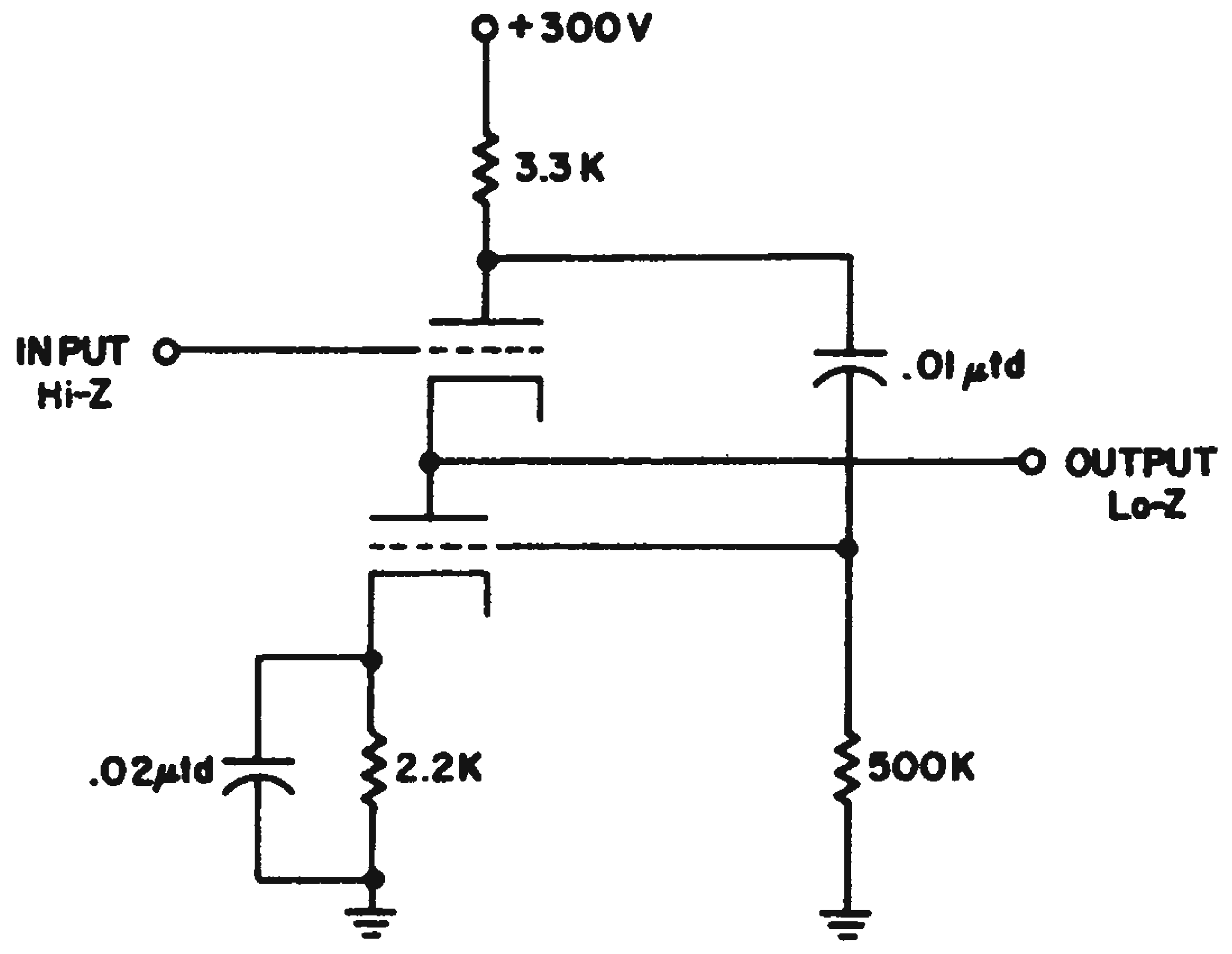

Lower power dissipation and high-input and low-output impedances are obtained with this modified cathode follower circuit.

The "cathode" tube conducts heavily only when the applied signal is going negative. Its impedance drops to a value determined by its plate characteristics. The steady state current for both tubes is set by the 2.2 K resistor.

With the circuit parameters indicated, using a 12BH7 to drive a 700-pf load a square wave rise and fall time of 2.5 μsec is obtained.

William H. Eisenreich, Engineer, Electronics for Medicine, White Plains, N. Y.

Balanced Xformer Windings Can Be Single-Ended or Push-Pull

It is often necessary, in many aspects of electronics, to make a transformer that can be changed from single-ended to push-pull, or vice versa. These transformers may be air-cored or core-wound for use at higher frequencies.

The primary difficulty that this change produces is the capacitive unbalance which occurs because one side of the single-ended winding is grounded. In phase-splitting transformers this results in phase unbalance in the push-pull winding. In link-coupled, air-core arrangements the maximum voltage swing and power output, with no loss of linearity, are limited similarly.

This unbalance can be entirely eliminated by the method shown in the figure. It has been used on small ferrite toroids in phase splitters, balanced modulators and phase discriminators. In one case the linear voltage swing of a large power amplifier was almost doubled by rewinding the single-ended link in this fashion.

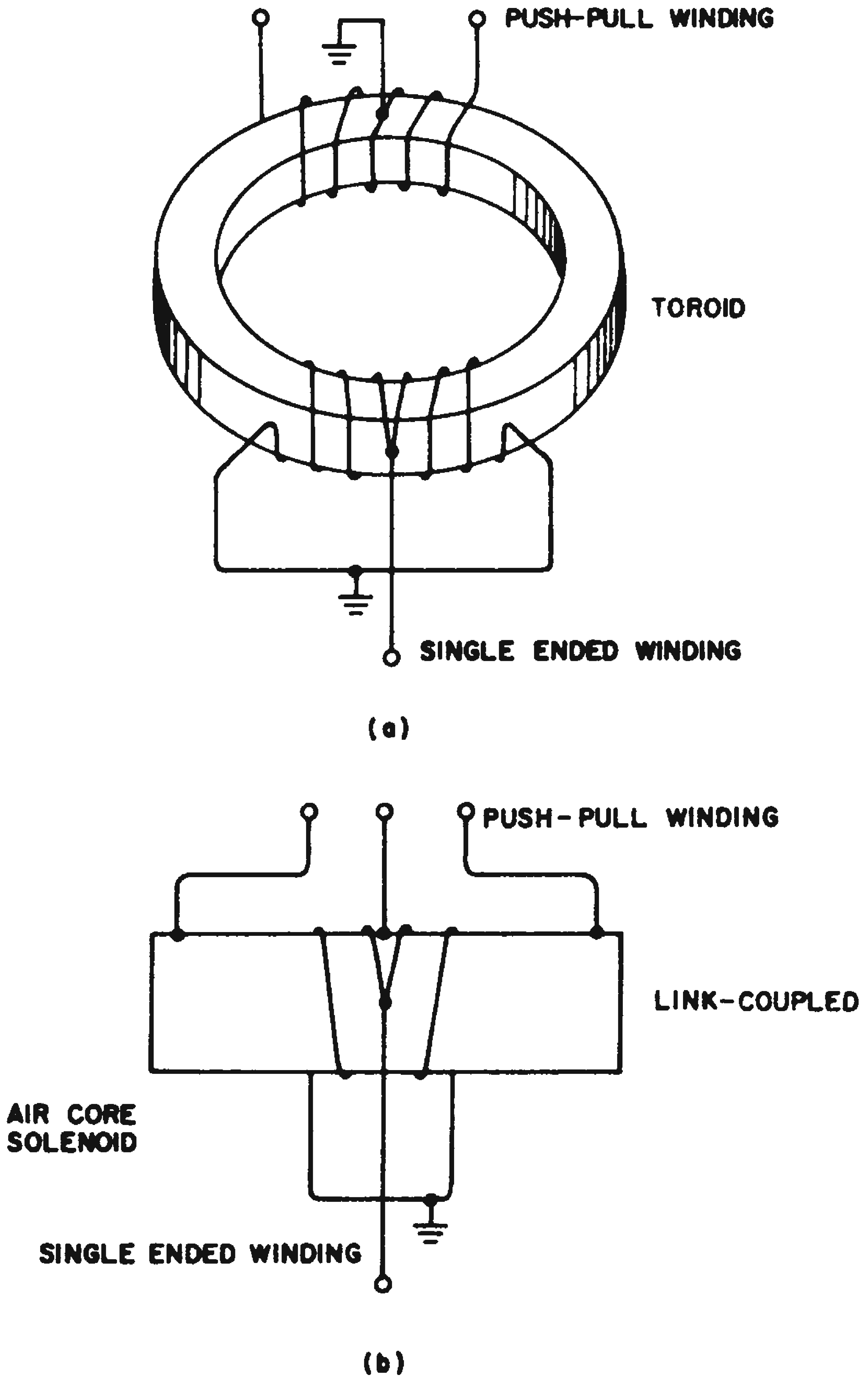

Transformer windings can be readily changed from single-ended to push-pull connection for (a) toroidal or (b) link-coupled units.

The single-ended winding consists of two windings in parallel, each having the required number of turns. These are wound from the center out, as shown, and the outer ends are joined and become the ground connection. It is seen that the flux in the two windings do not oppose, but rather aid each other. Although there is more winding capacitance due to the additional turns it is more than compensated for by the improvement in balance conditions.

For link-coupled transformers, the single-ended winding is similarly wound, with the single-ended winding centered over the center tap on the push-pull winding.

Martin Plotkin, Electrical Engineer, Brookhaven National Laboratory, Upton, Long Island, N. Y.

VR Tube Replaces Screen Resistor in Push-Pull Output Stage

A voltage regulator tube can be used as a series regulator to maintain a constant difference voltage between two loads.

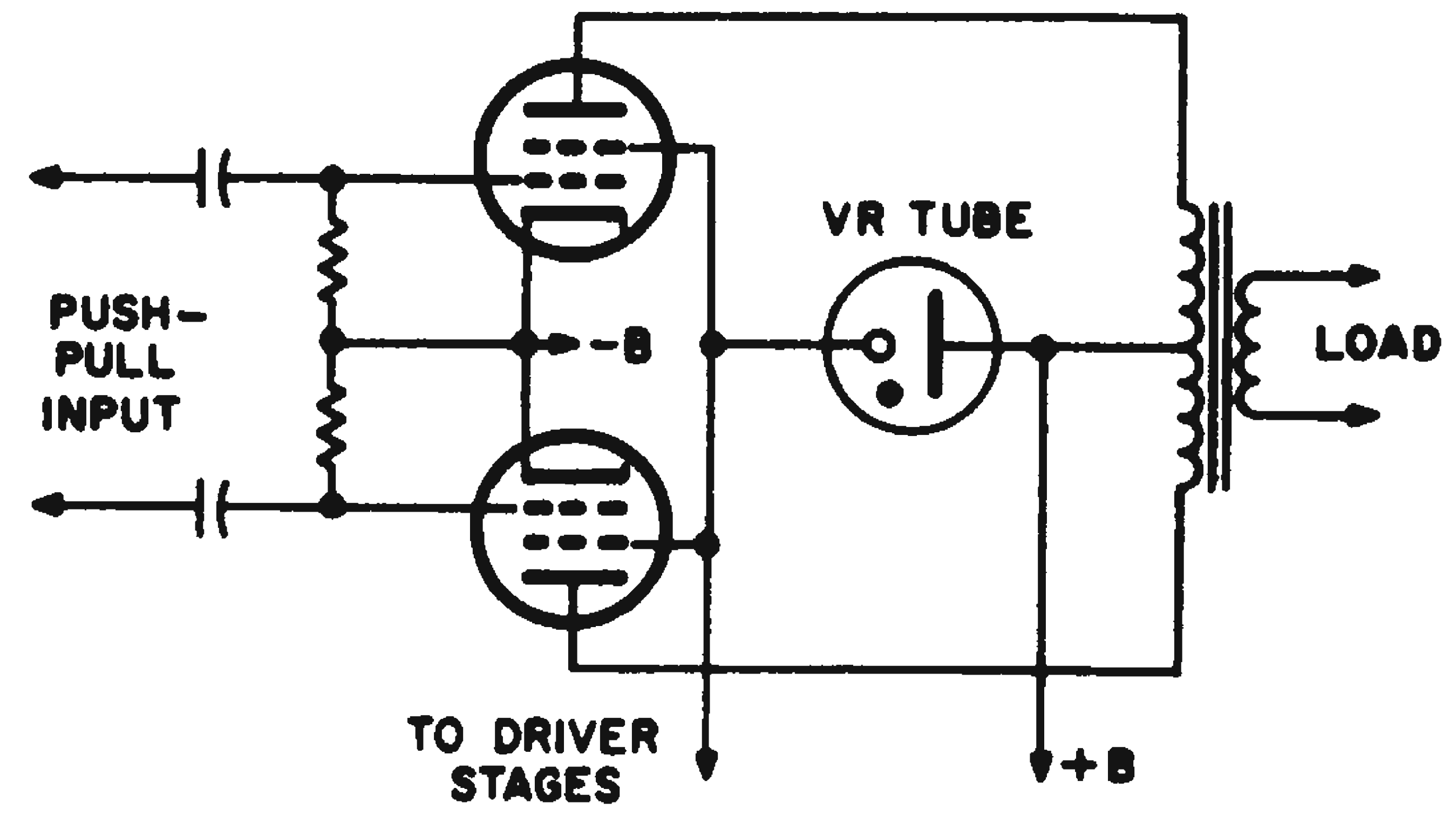

Use of VR tube eliminates screen dropping resistor, reduces screen voltage swing.

For example, in an audio output stage it is desirable to operate the screen grids of a push-pull output stage at 75 to 150 v below the plate supply voltage. Use of a dropping resistor poses a problem because of variation in screen current between signal and no signal conditions.

The use of a voltage regulator tube eliminates the need for high dissipation resistive networks.

H. A. Wittlinger, Engineer, Radio Corp. of America, Harrison, N.J.

Cathode-Follower Coupling Yields High Gain Bandwidth

Here's a circuit configuration which can provide voltage gain bandwidths of over 650 mc. Low capacitive loading of the cascode amplifier, Fig. 1, by the direct-coupled cathode follower

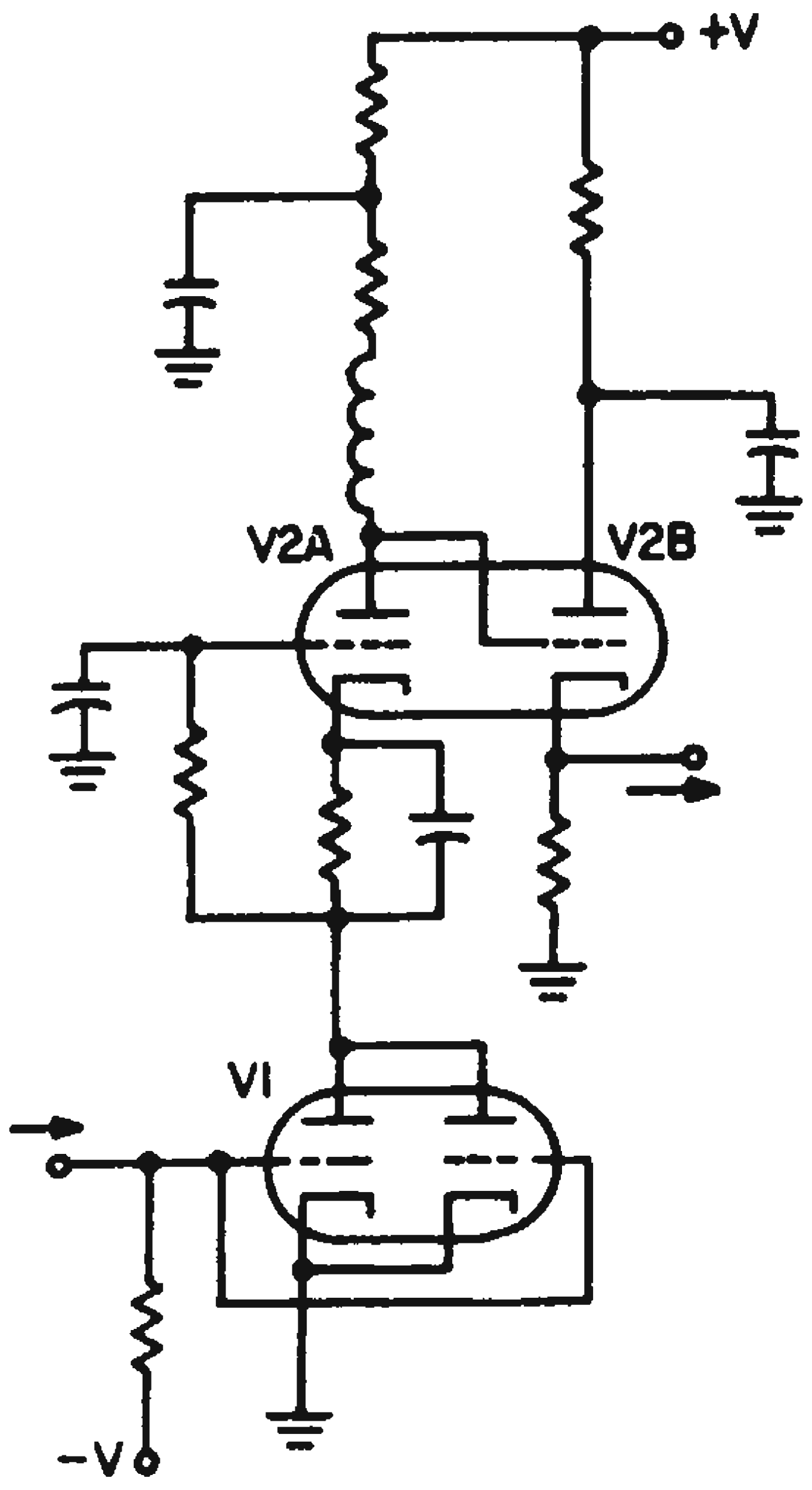

Fig. 1. Voltage gain bandwidths of over 650 mc can be obtained with cathode-follower coupled to cascode stage.

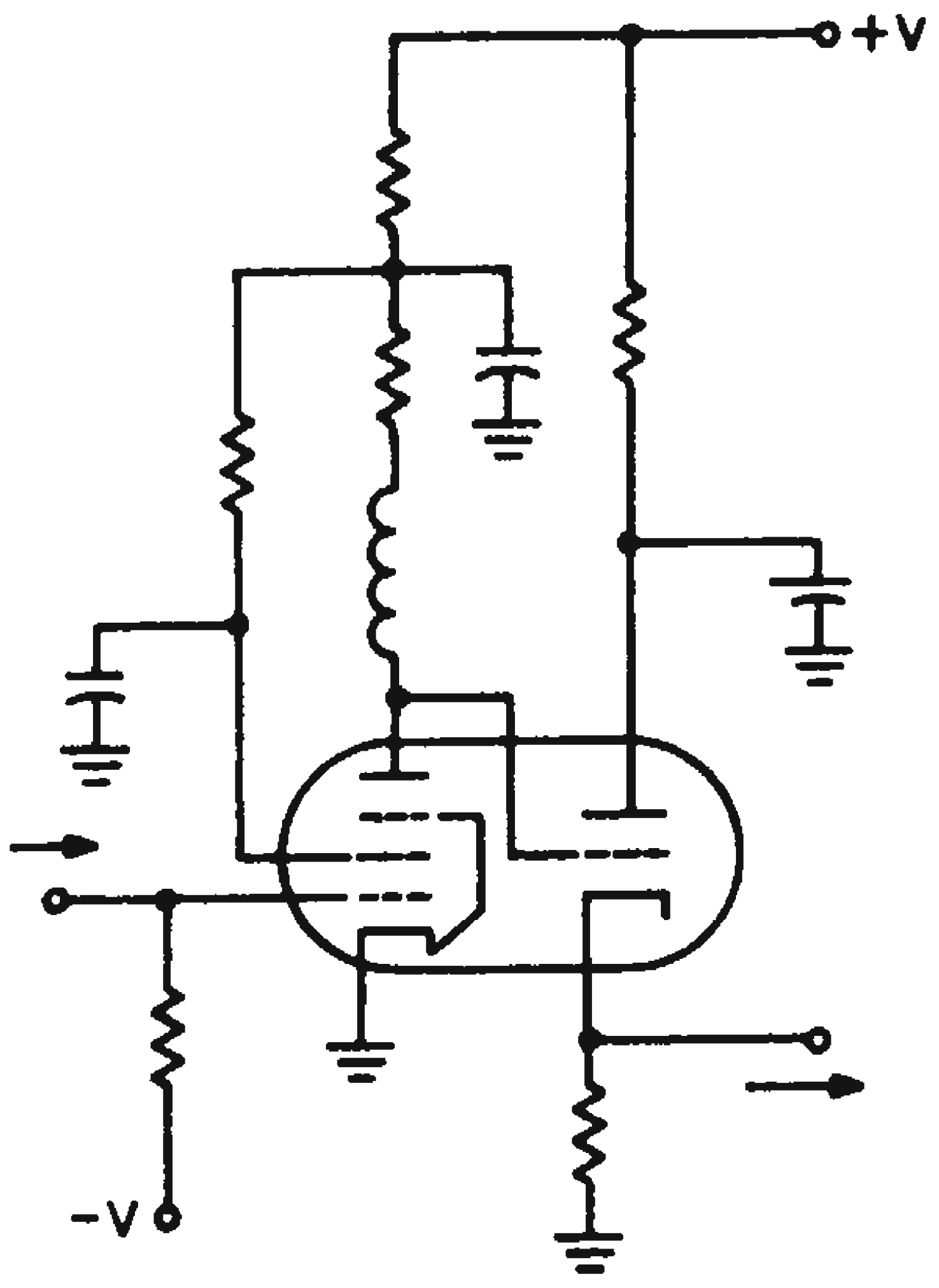

Fig. 2. With a single pentode-triode tube, gain-bandwidth is still high, but somewhat decreased.

permits a high plate load resistance, and hence high gain, in the cascode stage. Capacitive loading of a following stage is virtually eliminated by the low output impedance of the cathode follower.

If low-noise, high-transconductance dual triodes are used, this circuit can be readily applied to amplifying low-level signals.

The circuit of Fig. 2 yields somewhat less gain-bandwidth, but uses only a single pentode-triode vacuum tube.

H. F. Stearns, Engineer, Technical Products Operation, General Electric Co., Syracuse, N.Y.

Bypassed Bias Resistor Increases Emitter-Follower Input Z

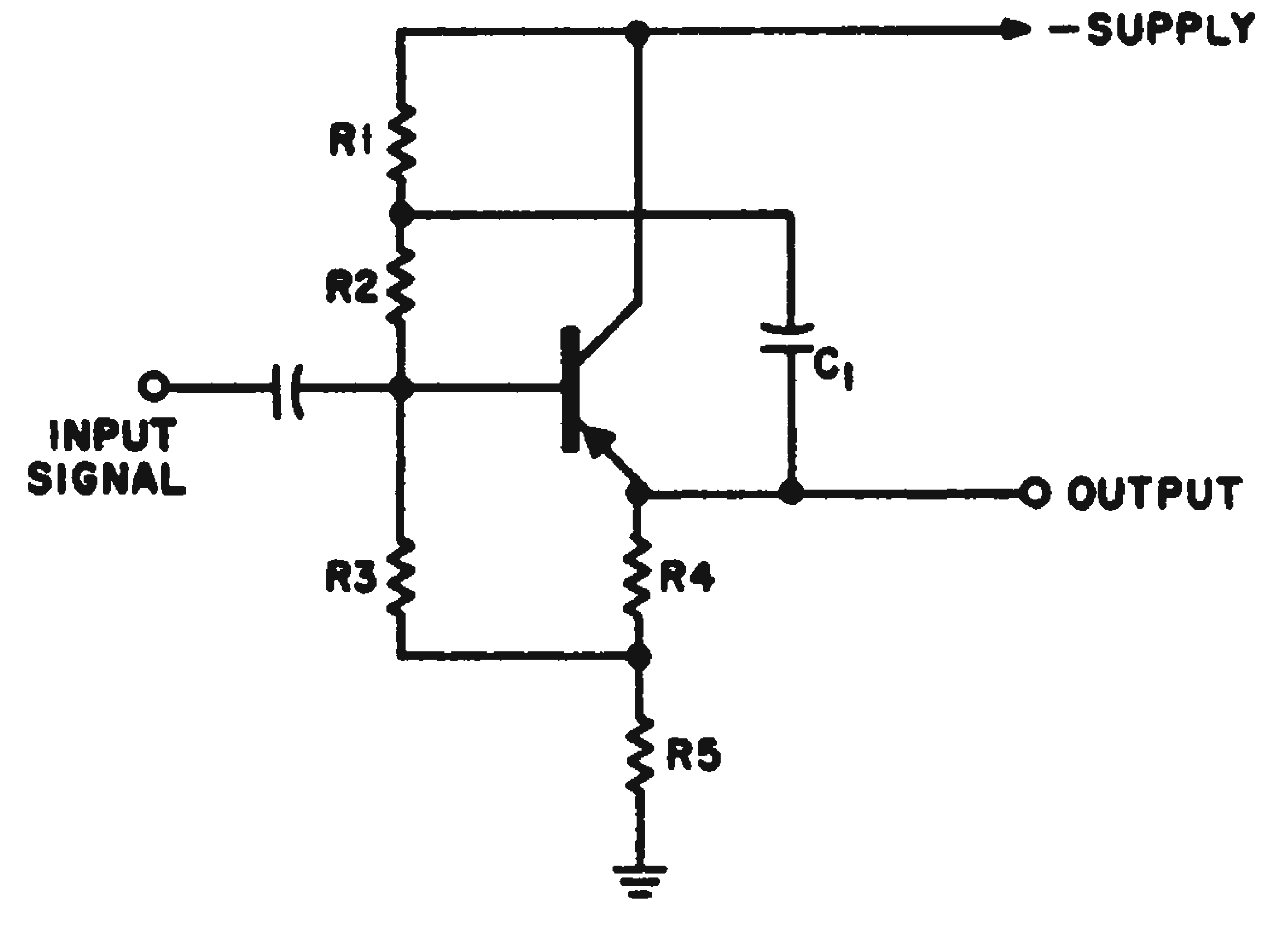

Bypassing of base-bias resistance by capacitor C_1 reduces the resistor's effect on input impedance of emitter follower.

In conventional transistor emitter-follower circuits, the input impedance is limited by the values of the base bias resistors. This limitation can be removed by connecting the circuit as shown in the figure.

Forward bias resistor $R_1 + R_2$ is divided into two equal parts and by-passed to the emitter by capacitor C_1. The emitter resistor is tapped as high as possible by resistor R_3 while still maintaining proper temperature bias conditions.

The value of R_3 does not affect the input impedance because of regenerative action in the emitter load. Capacitor C_1 puts R_2 and R_3 effectively in parallel for alternating currents. Resistor R_1 has no effect on the input impedance because it is in parallel with the low output of the stage.

Donald W. Bramer, Engineer, General Railway Signal Co., Rochester, N. Y.

AC Amplifier Is Wide Band, Less Bulky

Because of their large number of bypass capacitors, multistage transistor amplifiers become bulky and expensive, especially if designed for low cut-off frequencies. Wide-band performance can, however, be obtained if the stages are ac coupled as shown in the figure. Bulk and expense are reduced because only one capacitor is used.

Any number of these amplifiers can be connected in cascade, since the dc potential at the amplifier output is equal to the potential at the input. The peak-to-peak output voltage is equal to the dc supply voltage. The dc collector voltage of V_5 and the emitter voltage of V_1 are maintained at the same potential. The voltage drop across R_2 can be made negligible.

Gain stability is obtained by a proper choice of open loop gain and R_1 and R_2. A small capacitor is usually required to prevent oscillations near the transistor cut-off frequency. Transistors V_2 to V_5 should have substantial current gain at $V_{cb} = 0$. Most silicon and some germanium units meet this requirement.

The amplifier can be designed for excellent

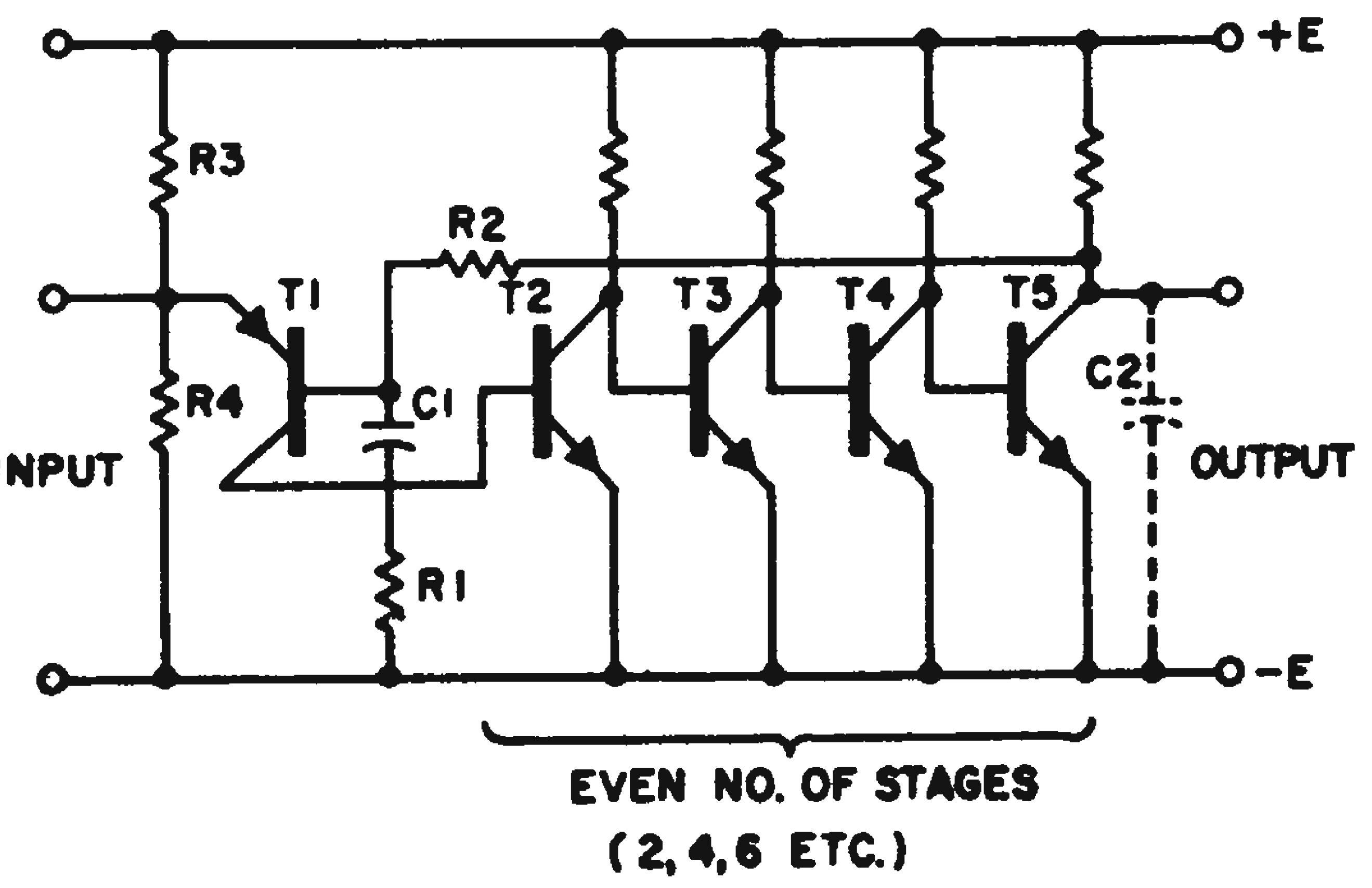

Direct-coupled amplifier has wide band and high gain, and operates without bulky and expensive by-pass capacitors.

temperature stability (1 db for a 100 C change in temperature) and wide-band performance (0.1 cps to 2 mc) at high gain.

Peter Laakmann, Project Engineer, American District Telegraph Co., New York, N. Y.

Ungrounded Shield Reduces Effective Cable Capacitance

Often it is inconvenient to locate a cathode follower stage near the high impedance circuit which drives it. But, if a shielded connecting cable is used with its shield grounded, the cable's input capacitance can affect the circuit frequency response.

This equivalent input capacitance, and the effect on frequency response, can be reduced by tying the cable shield to the cathode follower input, Fig. 1, instead of to ground. Very little voltage difference then exists between the inner and outer conductors. Reactive current is reduced to a small value.

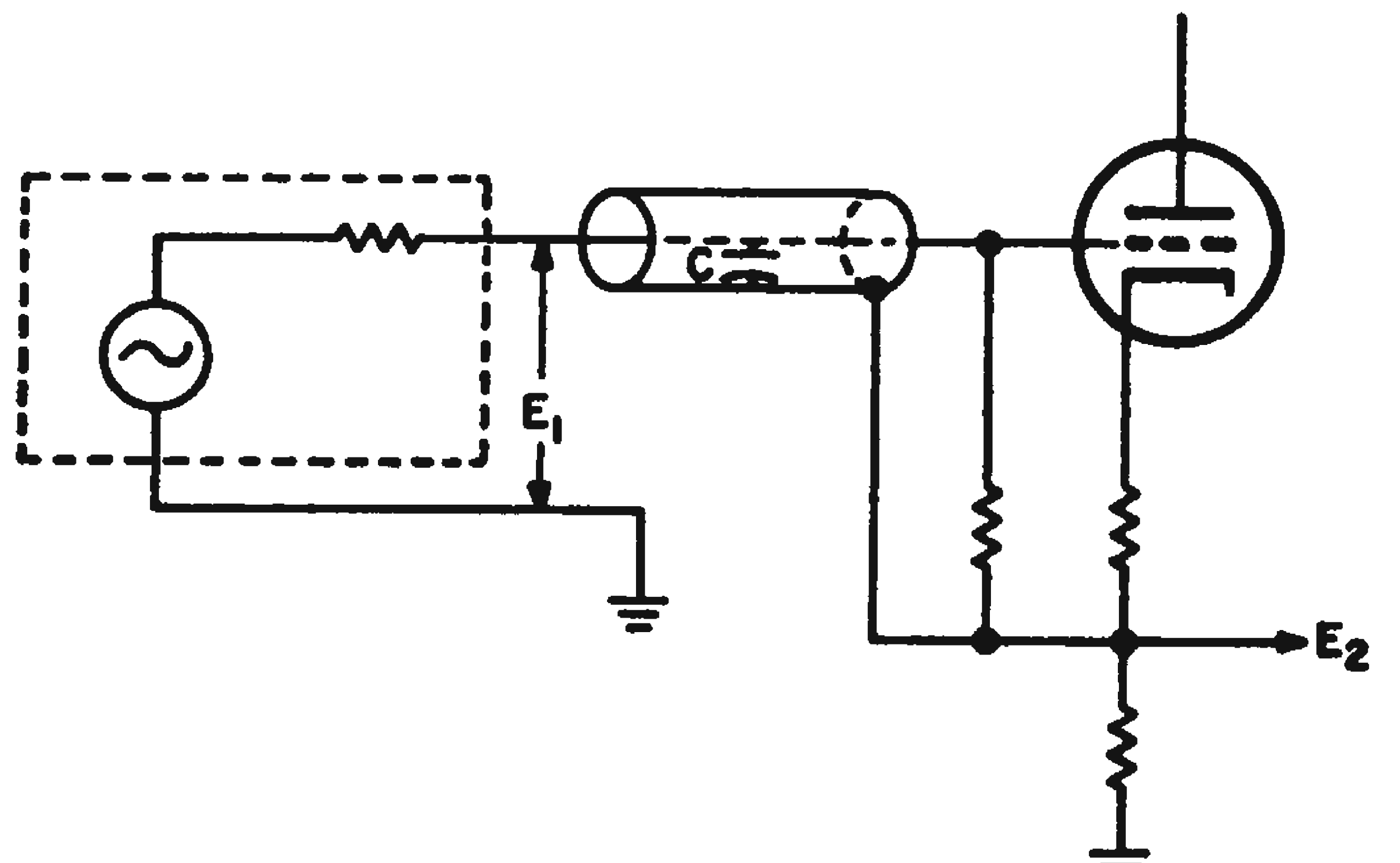

Fig. 1. Effective cable-input capacitance can be reduced by connecting shield to the cathode follower input.

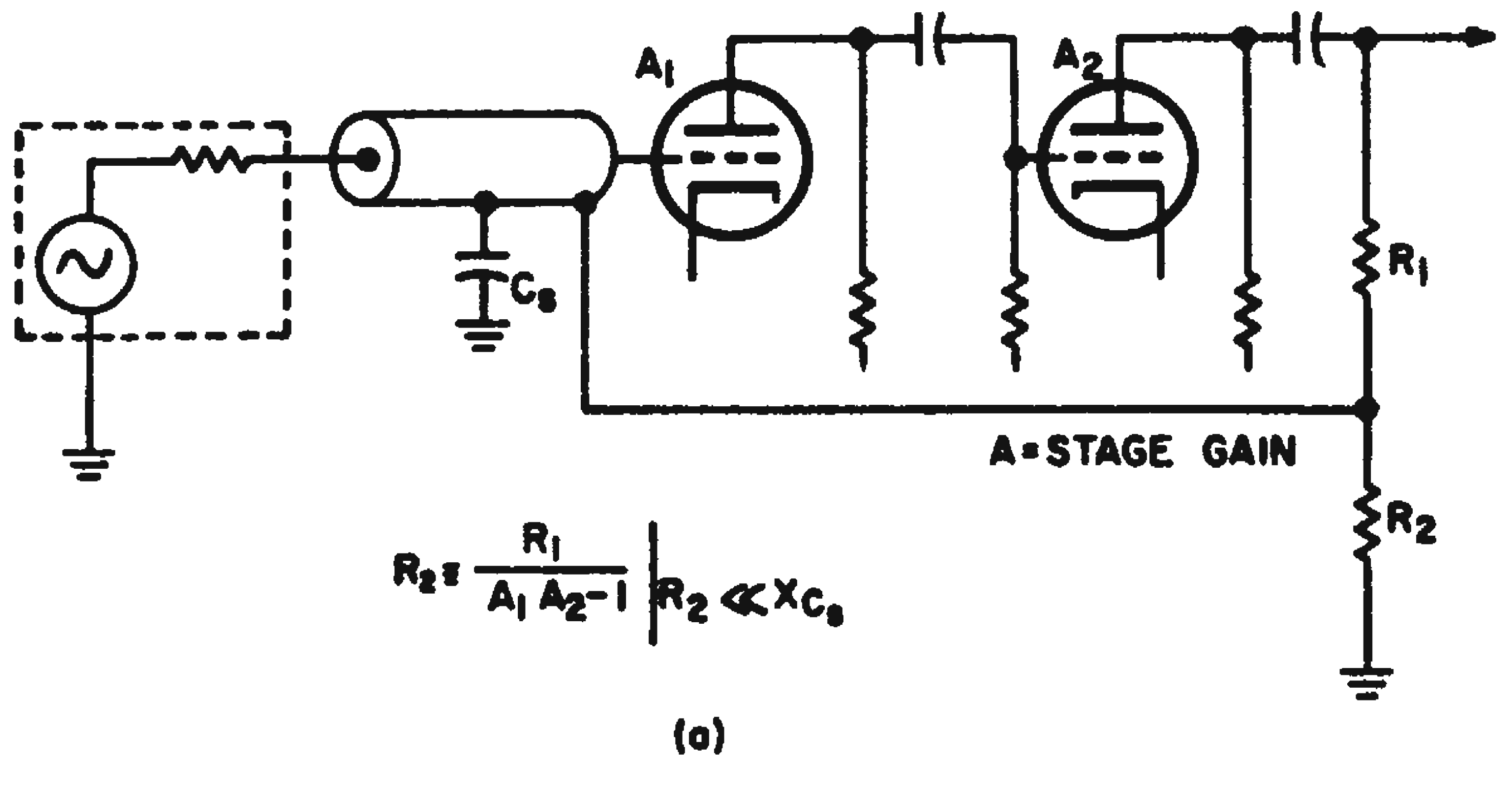

(a)

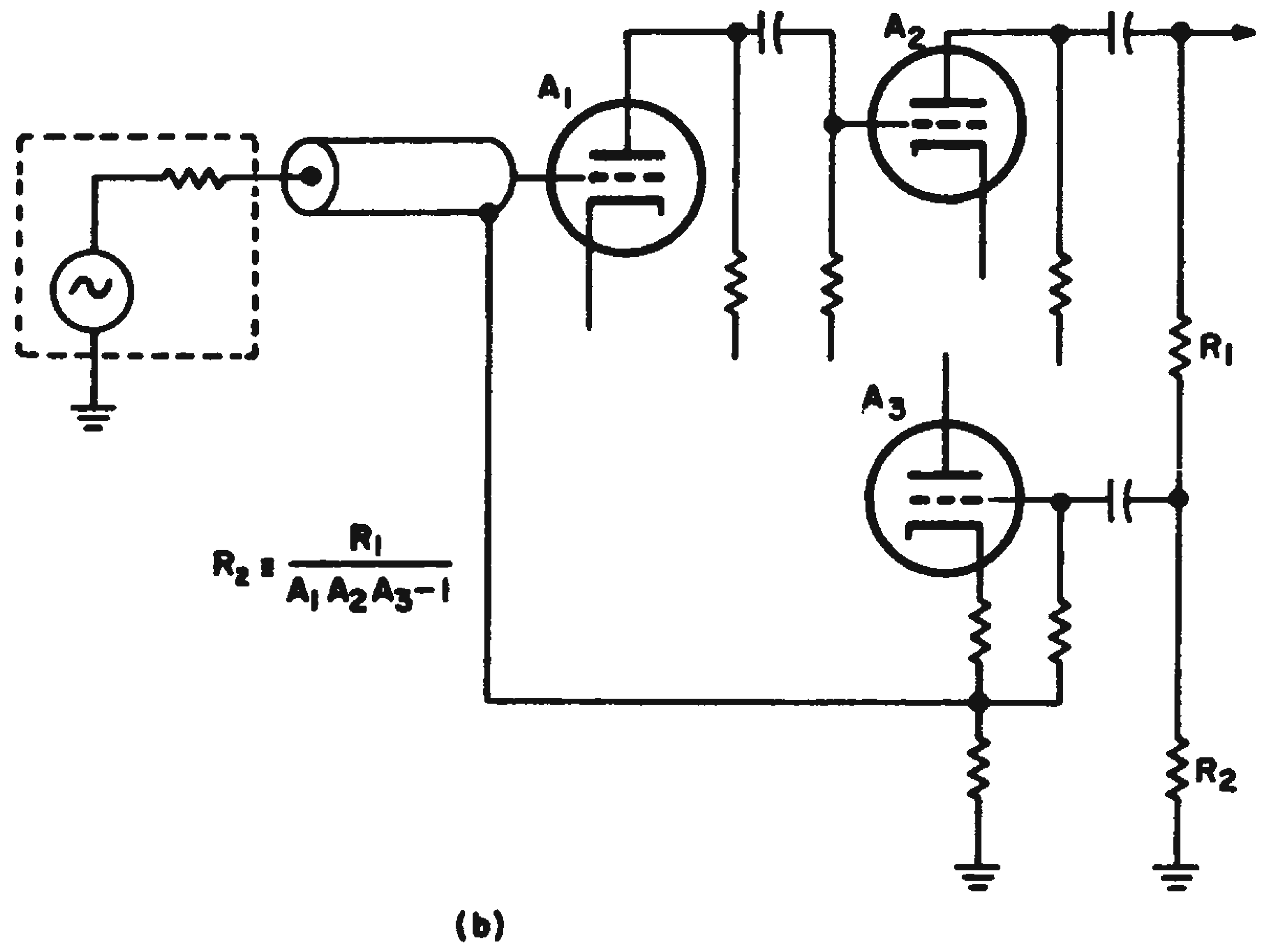

(b)

Fig. 2. Similar cable connections can be made for amplifiers of two or more stages.

If phase shift in the cathode-follower is negligible, the voltage E_1 on the inner conductor is in phase with the voltage E_2 on the shield. Reactive current I_x is equal to the difference between these voltages divided by the capacitive reactance of the cable X_c:

$$\text{Reactive current, } I_x = \frac{E_1 - E_2}{X_c}.$$

$$\text{Equivalent input reactance, } X_e = \frac{E_1}{I_x};$$

$$\text{Cathode-follower gain, } A = \frac{E_2}{E_1}.$$

These terms are substituted to yield the expression for the equivalent input capacitance, C_e.

$$\frac{E_1}{X_e} = \frac{E_1 - AE_1}{X_c} = \frac{E_1(1 - A)}{X_c};$$

$$\frac{X_c}{X_e} = \frac{C_e}{C} = \frac{E_1(1 - A)}{E_1} = 1 - A$$

$$C_e = C(1 - A).$$

Figs. 2a and 2b show similar arrangements for amplifiers of two or more stages. Resistance R_2 is selected so that the voltage applied to the cable shield is equal to the voltage on the inner conductor.

H. W. McCord, Electron Tube Div., Radio Corporation of America, Harrison, N.J.

DC-Servo Amplifier Has Single-Ended Drive

In driving a small dc motor in a servo loop it is sometimes desirable to have a single-ended input. Here is an amplifier that affords high voltage gain and high input impedance.

When the input voltage (or current) is sufficient to cause Q_1 to conduct, it first cuts off Q_2 and then conducts through CR_1. The motor thus is connected to supply A, causing rotation in one direction. When the input is reduced, R_1 will bias Q_2 on and the current through the motor is then in the opposite direction, through supply B. Voltage amplification is provided by Q_1, and Q_2 is an emitter follower that makes possible equal drive torque in each direction. This circuit has been sucessfully used to provide follow-up in a low-voltage power supply to reduce series regulator dissipation.

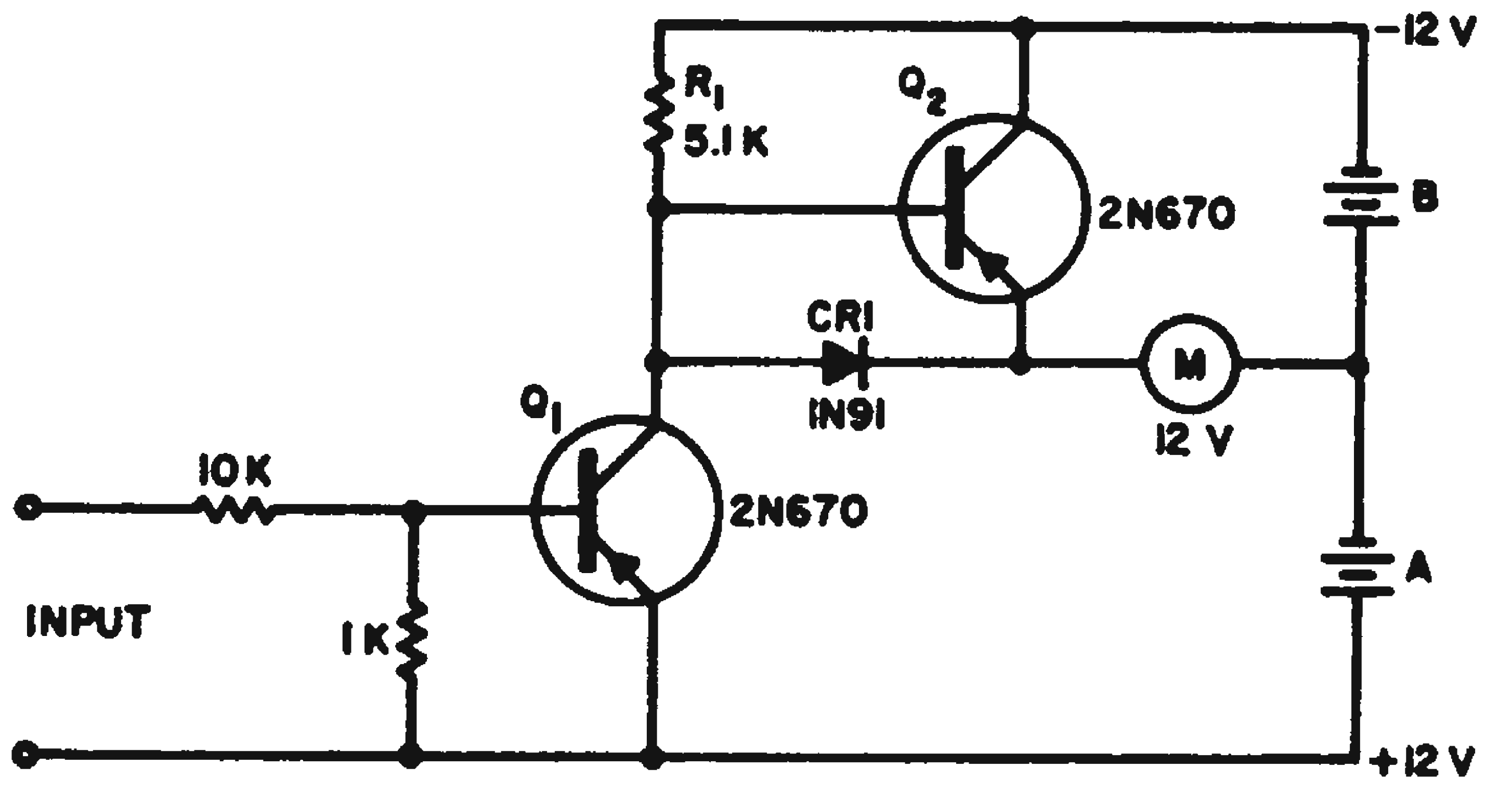

Input-signal level biases Q_1 or Q_2 on to connect required battery polarity to motor.

Richard L. Shaum, staff associate, Sandia Corp., Albuquerque, N. M.

Double Coupling Capacitors Avoid Leakage Current

Here's an amplifier coupling scheme that can be quite valuable, particularly when the coupling is over several thousand volts as in cathode ray tubes.

In the commonly used arrangment, Fig. 1a, the leakage current of capacitor C_1 flows through resistor R_1. This can cause an appreciable shift in the bias on the following stage V_2.

But, when C_2 and R_2 are added, as in Fig. 1b, the leakage current of C_1 is largely blocked by C_2. Instead of flowing through R_1, the leakage flows through R_2 and the bias on V_2 is not shifted.

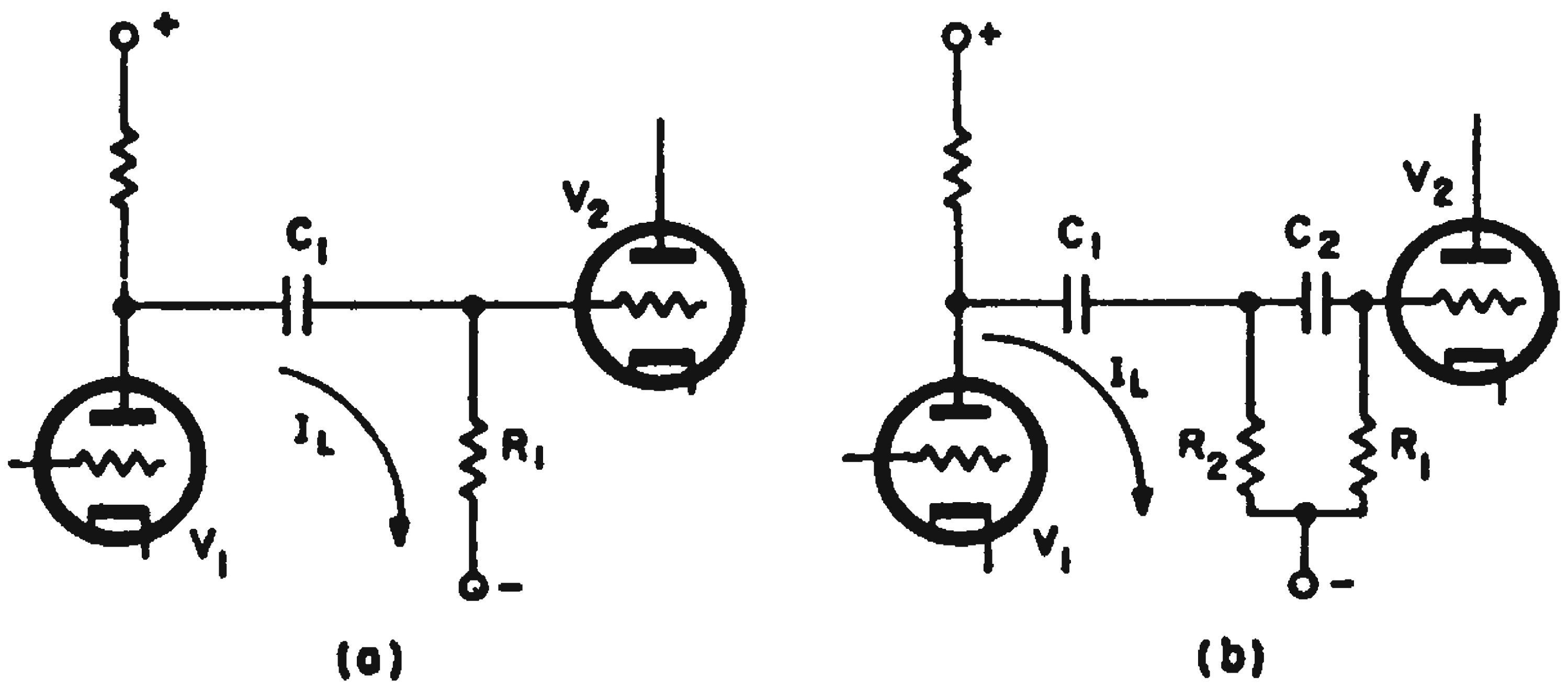

Extra coupling capacitor C_2 in (b) blocks leakage current of C_1 from affecting bias of following stage V_2.

E. R. Roeschlein, electronic engineer, U. S. Naval Avionics Facility, Indianapolis, Ind.

Variable-Gain Amplifier Has 40-Db Range

Gain of the circuit to be described is controlled by the current flowing through a log diode. The diode is the dynamic emitter resistance (R_e) and its dynamic impedance determines the circuit gain. The dynamic resistance of the diode is a linear function of current (the higher the current, the lower the resistance). Thus, the gain of the stage is directly proportional to the diode control current. The R_i resistor derives the operating current for the transistor.

With such a circuit configuration, gain changes in the neighborhood of 40 db are attainable. The variation in gain is limited at the high end by the emitter resistance of the transistor, and at the low end by the R_i resistor and other impedances internal to the transistor.

Such a circuit is limited to small signal operation due to the nonlinear diode characteristic.

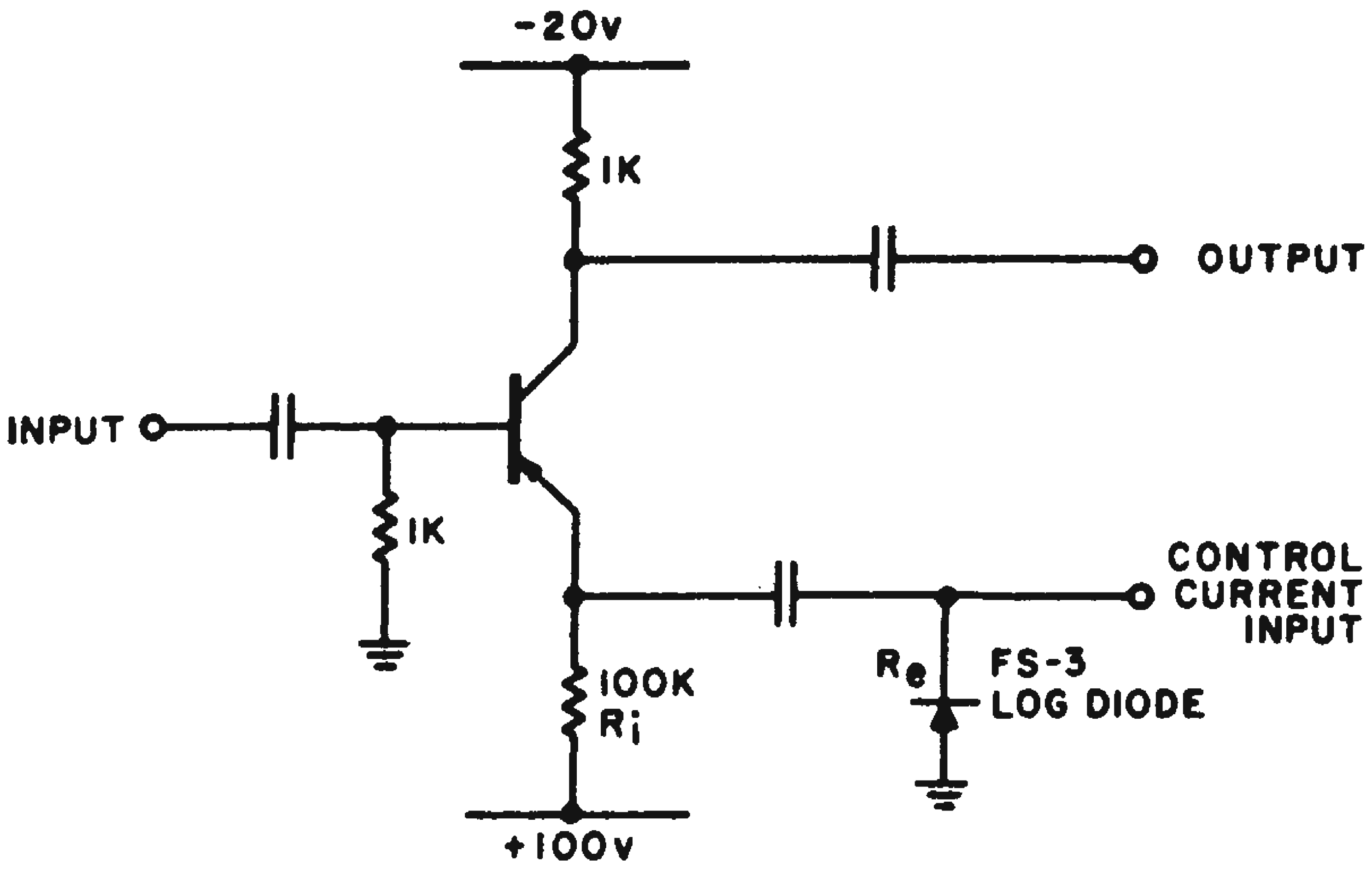

Current through log diode controls gain of amplifier stage.

Log diodes can also be placed across the collector resistor and base resistor to affect gain. It is anticipated that the gain of a single video couplet can be varied more than 70 db with triple diode control.

Robert W. Cope, project engineer, Bendix Radio Div., The-Bendix Ccorp., Baltimore 4, Md.

Wien-Bridge Amplifier Has Selectivity With Stable Gain

The conventional frequency-selective feedback amplifier having a rejection filter in the feedback loop has the disadvantage that the gain of the amplifier at the center frequency is equal to the forward-path supply voltage, and tube parameters.

The circuit shown in Fig. 1 is an adaptation of the Wien-bridge frequency-rejection network. It is driven by a split-load bridge driver in series with an amplifier. The amplifier is connected between the cathode and grid of the bridge driver. The flow diagram satisfying Fig. 1 is shown in Fig. 2. From this diagram amplifier gain at center frequency can be obtained by $R_2/(R_1 + R_2)$. Gain at frequencies far from the center frequency will be:

$$\frac{R_2}{R_1 + R_2} \quad \frac{1}{1 - A\,\dfrac{R_1}{R_1 + R_2}}$$

or

$$\frac{R_2}{R_1\,(1 - A) + R_2}$$

where A is the gain of V_2. Simultaneous change of C or R will provide a change of center frequency by $1/2\pi\, RC$.

A simple, inexpensive Wien-bridge frequency-selective amplifier using a triode-pentode tube is shown in Fig. 3. To avoid unbalance of the bridge, a variable resistor is used as R_k. For the adjustment, the feedback loop between the plate of V_2 and the grid of V_1 is opened at a convenient point. The R or C and the pot R_k should be adjusted to the null by applying a desired frequency signal at the input. A CRO or VTVM at the plate of V_2 is used as a detector.

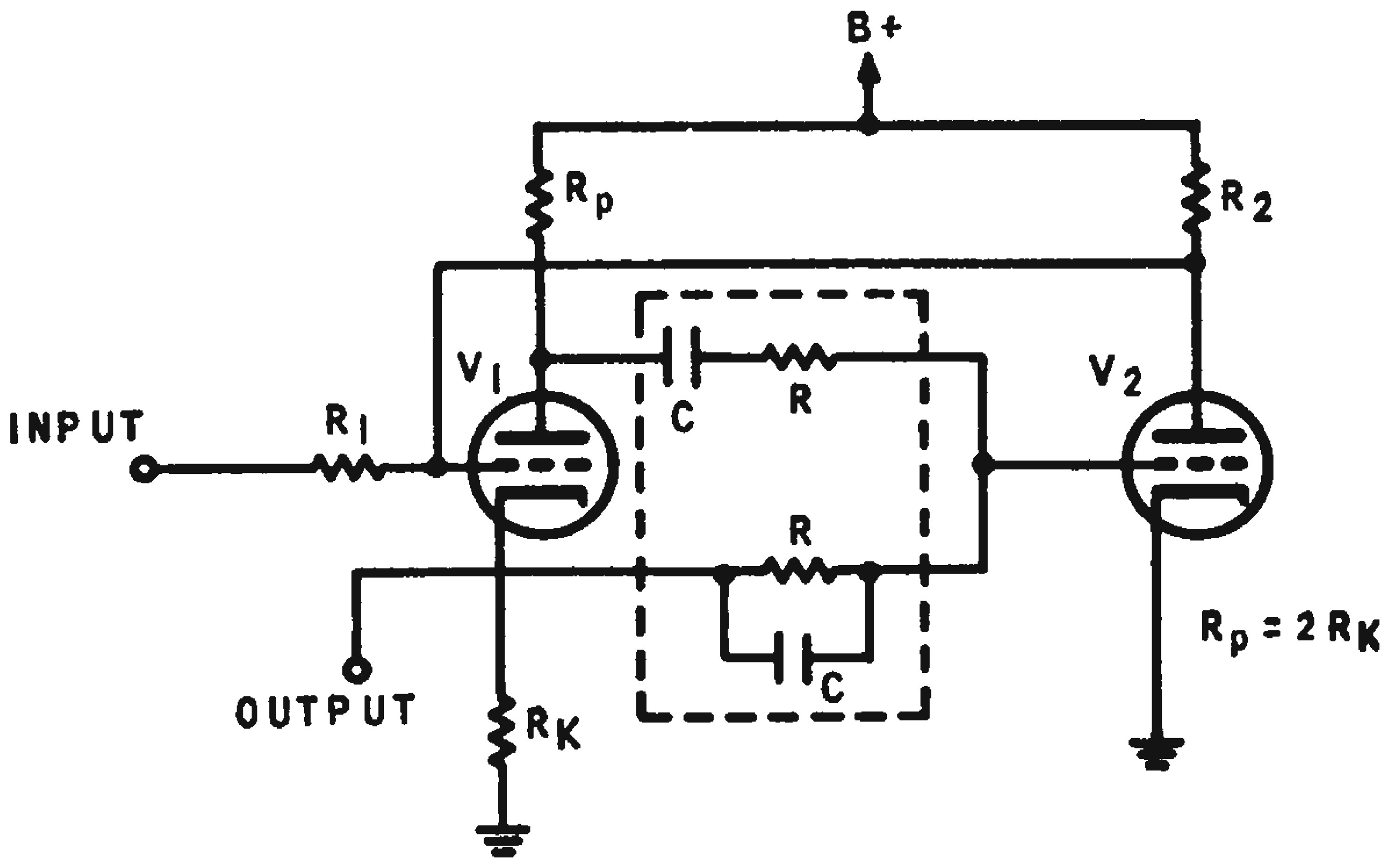

Fig. 1. Basic Wien-bridge frequency-selective amplifier.

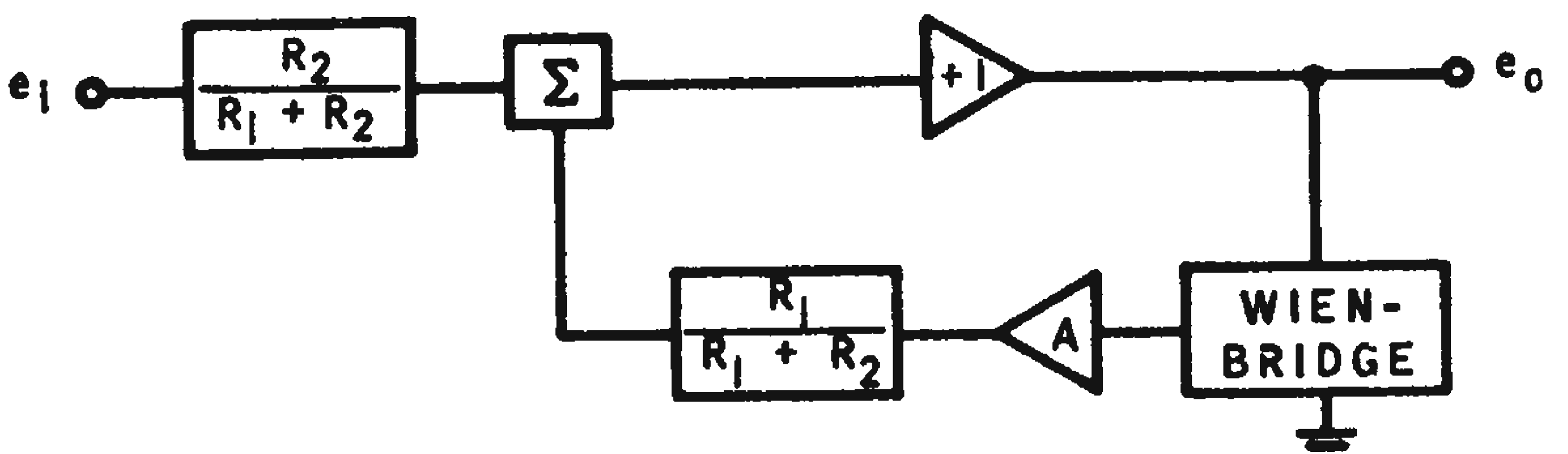

Fig. 2. Gain at center frequency can be obtained from flow diagram.

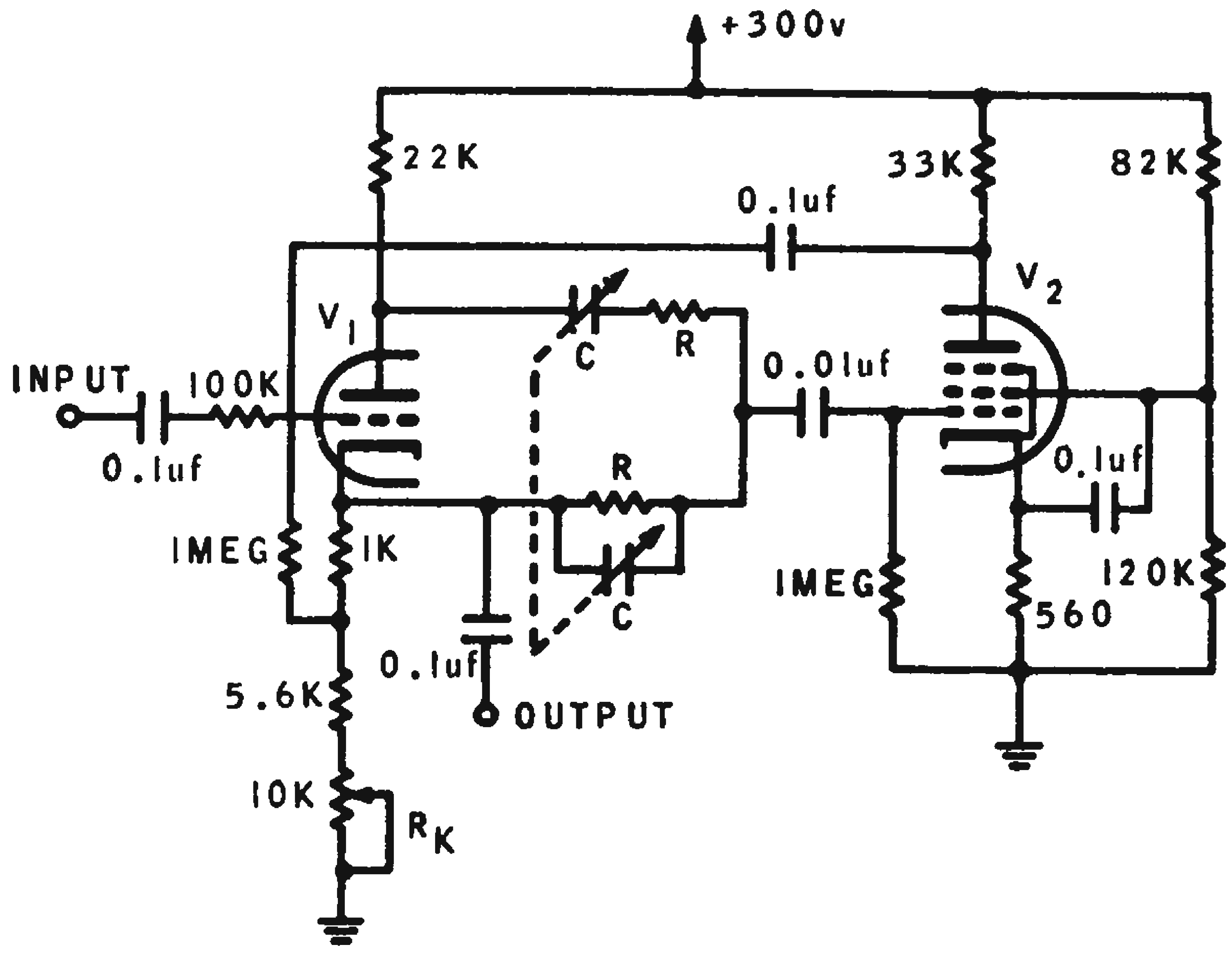

Fig. 3. Frequency-selective amplifier uses 6EA8 triode-pentode. Cathode potentiometer is used for balancing.

The test result indicated that the gain stability of the amplifier at the center frequency is very good despite large changes in the power supply voltage as well as change of tubes. The frequency-selective amplifier described can be operated up to about 500 kc.

K. H. Liu, engineer, Industrial Nucleonics Corp., Columbus 2, Ohio.

Hybrid DC Amplifier Replaces Output Transformer

In a low frequency hybrid amplifier it appeared that an output transformer would have to be used to secure a higher no-load output voltage than was available at the collector of the output transistor. Because very low frequencies were involved, a transformer would have been large and expensive.

It was found simpler and better to use a grounded grid vacuum tube output stage. This gave direct coupling and unusually simple circuitry for the additional stage of amplification.

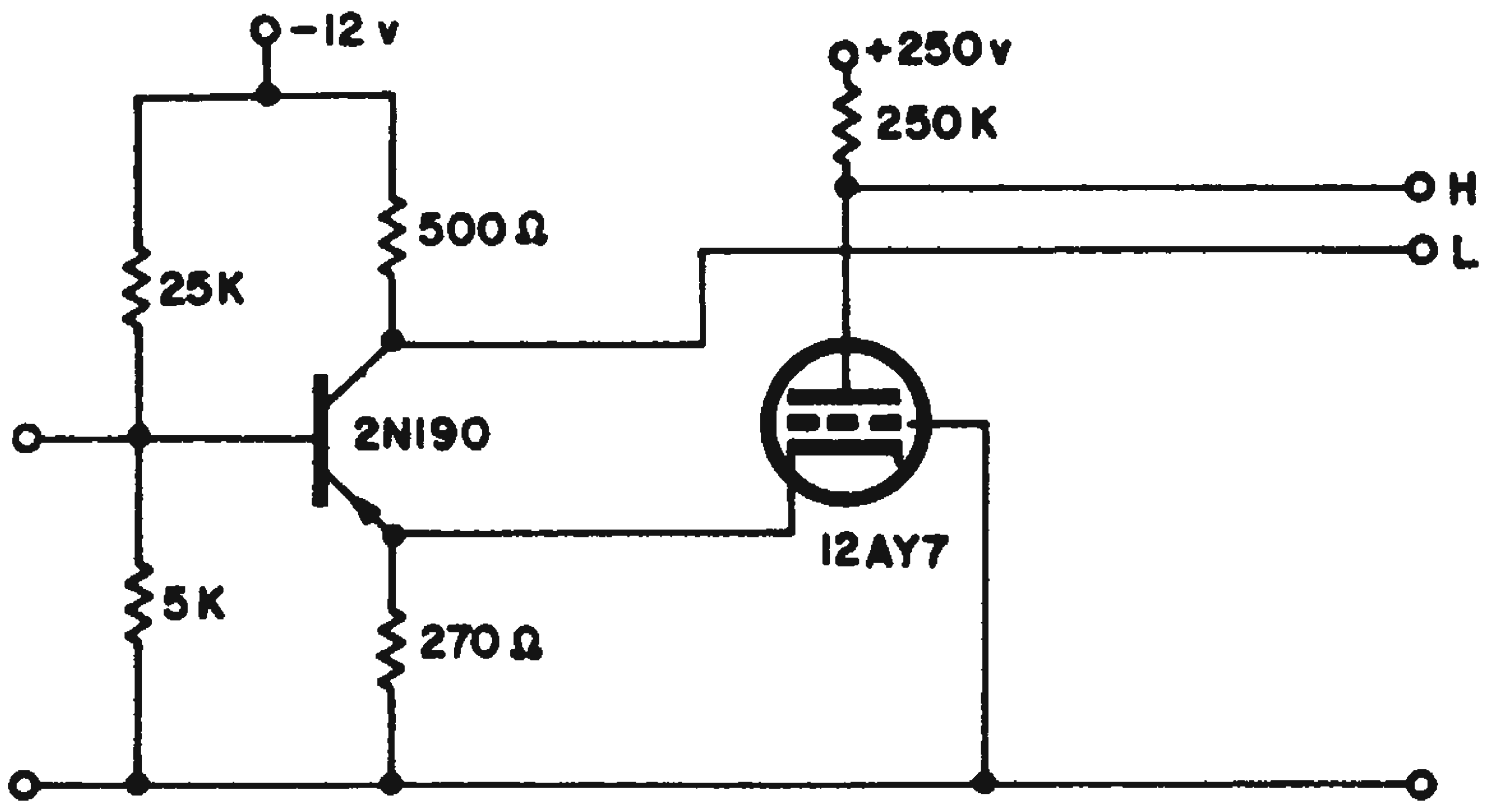

Grounded grid vacuum tube output stage in low frequency hybrid amplifier takes the place of bulky, expensive output transformer.

Laurence G. Cowles, Electronic Design Engineer, The Superior Oil Co., Bellaire, Tex.

Amplifier Design Provides 20-Megohm Input

A high-impedance transistor amplifier was needed in a metering circuit. Impedances approaching those of vtvm amplifiers were desirable to keep circuit loading to a minimum. An output voltage of 1-v rms across a 3300-ohm load and a frequency response from 10 cps to 200 kc was necessary. Figures 1, 2 and 3 show the evolution of an amplifier that more than met the requirements.

In Fig. 1, bootstrapping was used on a basic emitter-follower circuit to eliminate the shunting effect of the base-bias resistors. Using a transistor with a current gain of approximately 100, the input impedance was measured at 200 K with a 3300-ohm load.

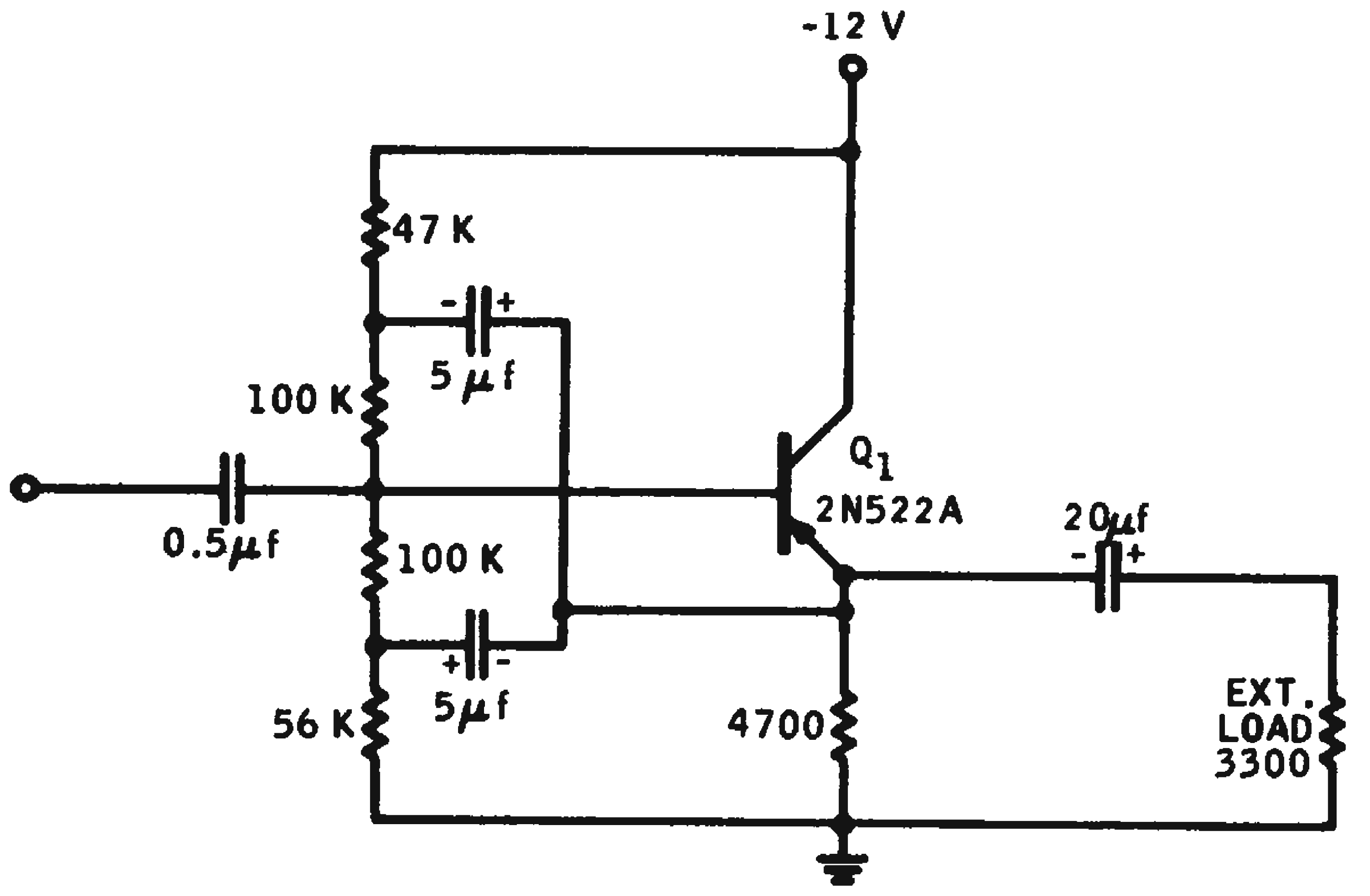

Fig. 1. Basic amplifier uses bootstrap capacitors to eliminate shunting effect of base bias resistors.

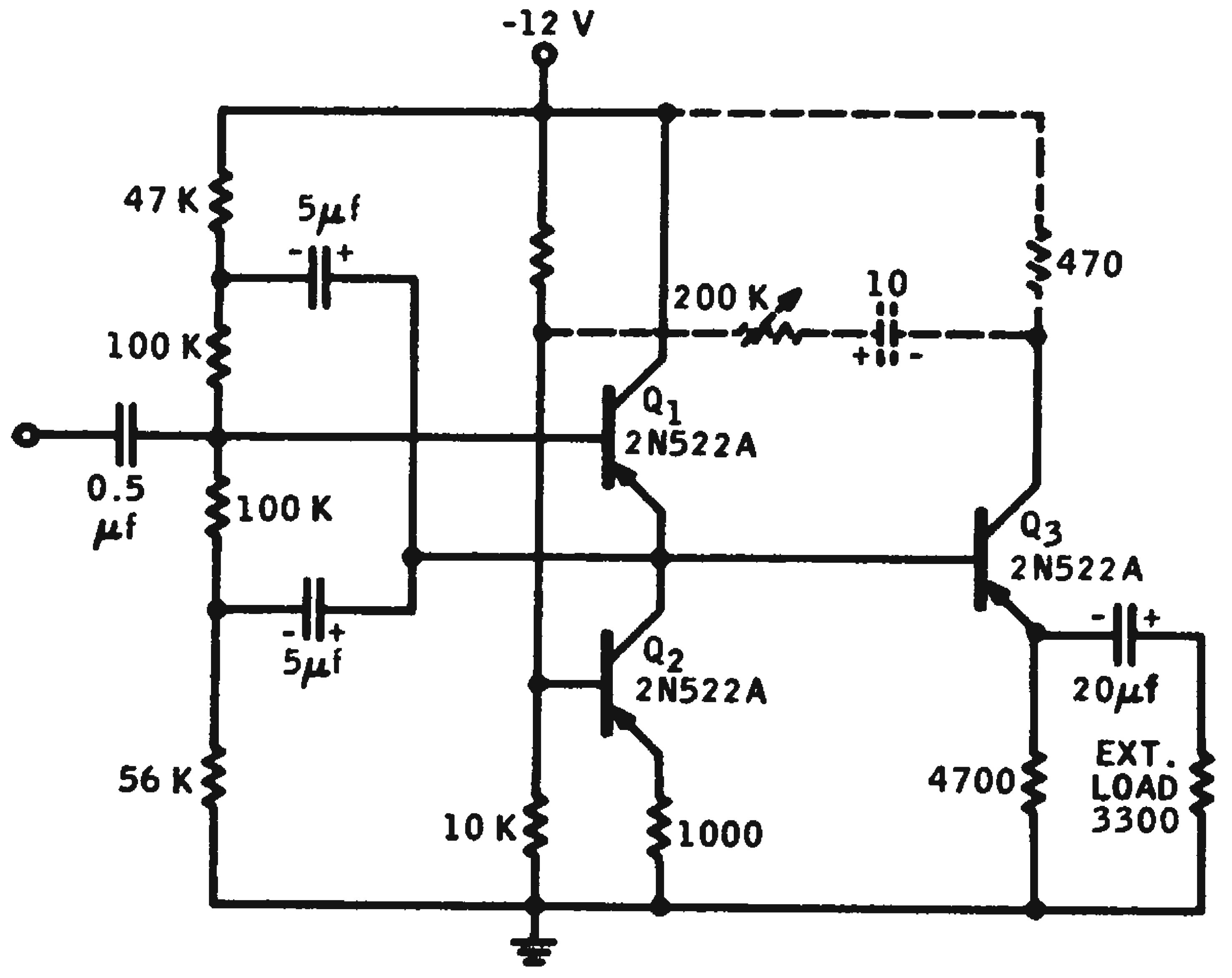

Fig. 2. Transistor in emitter leg of Q_1 and positive feedback (dashed lines) increase input impedance.

A significant increase in input impedance was obtained by replacing the emitter resistor of Q_1 with the collector resistance of a grounded-base transistor Q_2, as shown in Fig. 2. To keep the loading as light as possible on the emitter of Q_1, an emitter follower Q_3 was used to couple the load. An impedance of slightly over 1 megohm was measured at the input with the load connected.

Input impedance can be greatly increased by the addition of the components shown in the dashed lines. This, of course, is positive feedback and if overdone will result in oscillation. However, if the feedback adjustment is set with care, the input impedance can be raised as high as 20 megohms before instability occurs.

Gordon D. Svendsen, engineer, Ampex Corp., Redwood City, Calif.

Short-Cut Connection Simplifies Transformer-Coupled Biasing

Here is a simplified way of providing transistor biasing that often can be used when low- and medium-level amplifier stages are transformer-coupled.

Since the voltage at the emitter of a typical amplifier stage is usually close to the optimum value for biasing the base of the following stage, the secondary of a matching transformer can be returned directly to the emitter, (b). As long as the emitter of T_1 is bypassed there will be no signal feedback. Also, the second stage will be very stable because the equivalent dc base circuit resistance of T_2 is very small. Base-point drift of T_2 essentially is determined by, and cannot exceed, that of T_1. This is because as far as dc is concerned, T_1 is used as an emitter follower having a less-than-unity voltage gain.

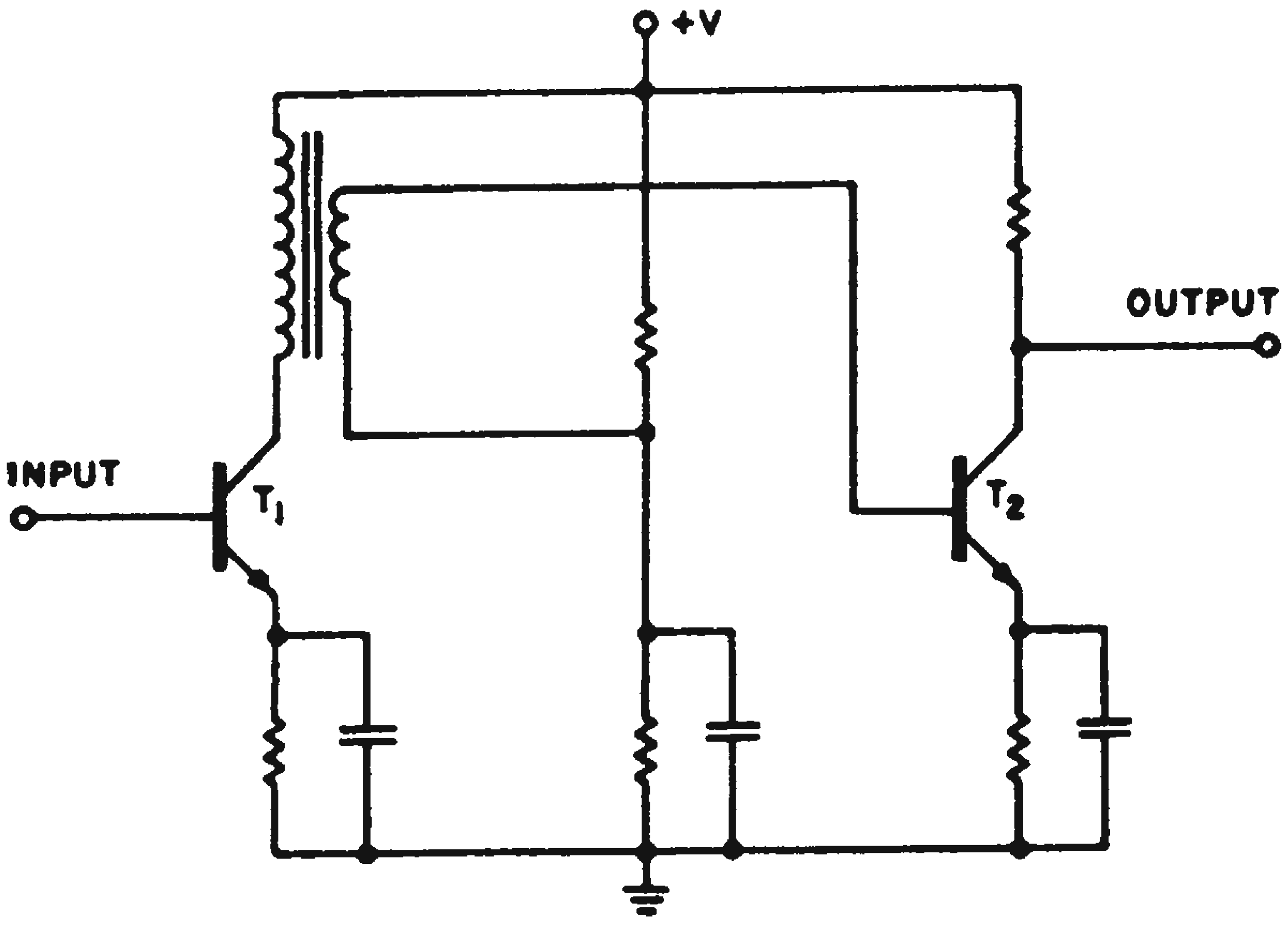

(a)

(a) Conventional method of biasing transformer-coupled stage applied dc bias to second stage through dropping resistors and secondary winding. **(b)** Simplified connection places bias on stage T_2 directly from the emitter of stage T_1.

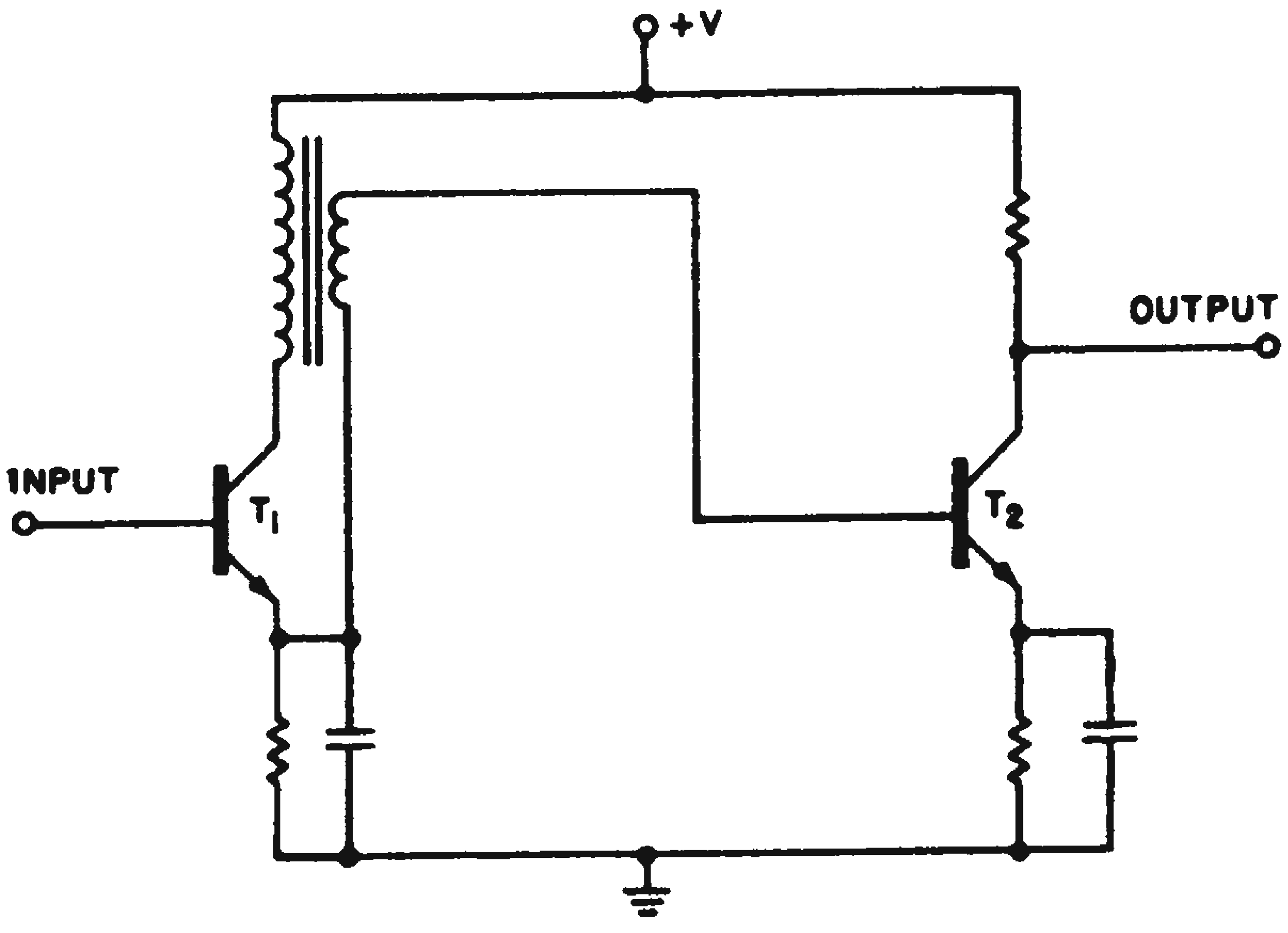

(b)

Not only does the circuit have excellent stability but, because it uses only the transformer as the coupling element, cost and space are reduced, while reliability is increased. Elimination of the biasing voltage divider for T_2 *increases circuit efficiency.* And finally, since maximum gain can be obtained with relatively fewer parts, this arrangement makes the use of a transformer attractive, where RC coupling might otherwise be preferred.

Maxwell Strange, electronic engineer, Goddard Space Flight Center, Greenbelt, Md.

Low-Level Preamplifier Has High Impedance Input

A low-cost preamplifier for oscilloscopes and meters can be a real time saver in the lab. The unit employs the Darlington circuit to obtain a high input impedance. The ac input impedance is approximately equal to β^2 times the emitter resistance of Q_2. The actual measured impedance was in excess of 2.2 megohms. With the input shorted, the noise level is down -78 db as read at the output with a VTVM. Using low-value resistors in the base of Q_1 to establish the operating point provides good dc stability from 25 C to 60 C. Linearity is within 1.5 per cent from 100 μv to 1 mv input. Frequency response is $\pm$ 2 db from 100 cps to 350 kc. The circuit shown can be readily adapted to other applications.

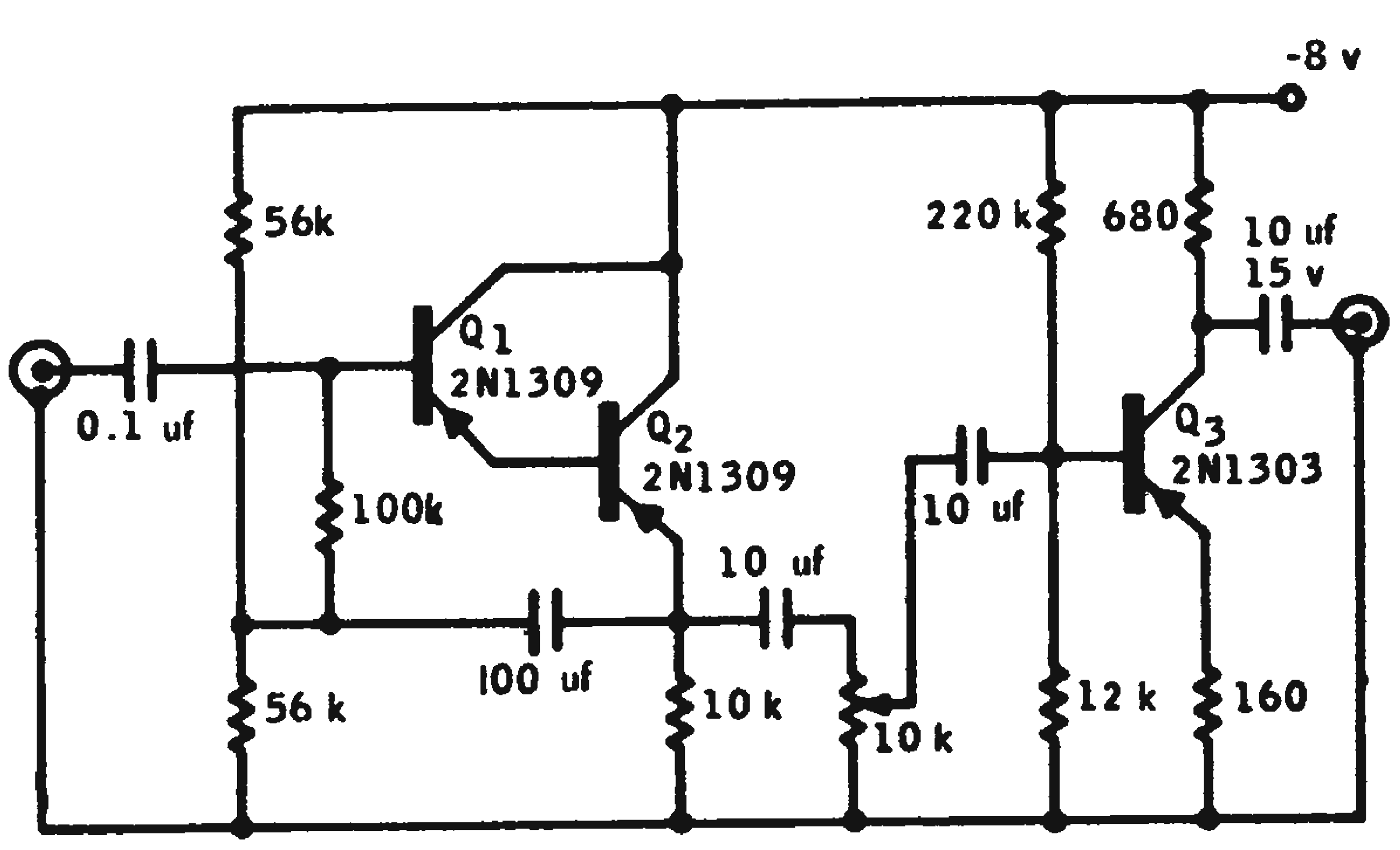

Darlington low-level preamplifier has 1.5 per cent linearity with input of 100 μv to 1 mv.

Edward W. Smith, Senior Engineering Technician, Texas Instruments Inc., Houston, Tex.

Gain Control Maintains Differential Amp's DC Balance

Controlling gain of a differential amplifier stage by adjusting local feedback does not affect either dynamic range or differential stability as long as balance is maintained. The primary disadvantage of this method in a conventional circuit is that two resistors, R_{A_1} and R_{A_2} in (*a*), must be varied simultaneously. They must also track precisely if dc balance is to be maintained. Range of adjustment is limited since these resistors must be kept small compared to R_B to prevent common-mode bias shift.

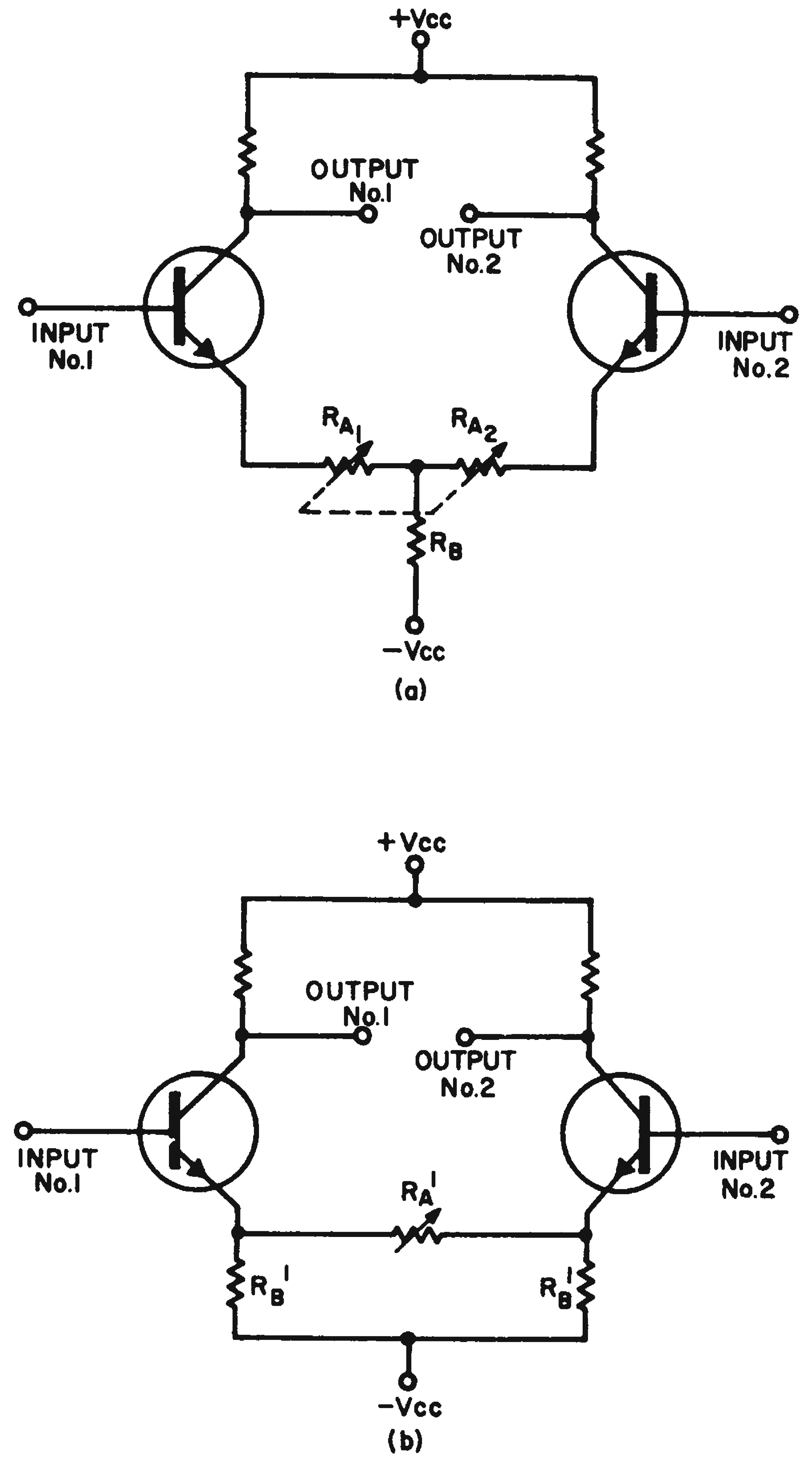

Delta-wye transformation of conventional differential amplifier (a) gives single resistor gain control (b).

The solution may appear obvious, but is often overlooked. If a wye-delta transformation is performed on R_{A_1}, R_{A_2}, and R_B the circuit of (*b*) results. Here, the single resistor R_A functions as a gain control over a very wide range. Since no current passes through R_A under normal balanced conditions, the dc operating point becomes independent of gain setting.

Maxwell Strange, electronic engineer, Goddard Space Flight Center, Greenbelt, Md.

Variable Resistance FET Gives 75-Db Gain Control

A field-effect transistor (FET) may be used to control the gain of a common-emitter amplifier over a range of 75 db. The gain of such an amplifier will be approximately equal to R_3 divided by the source-to-drain resistance of the FET.

Gain control is achieved by varying the source-to-drain resistance by applying a positive control voltage V_c to the gate of the FET.

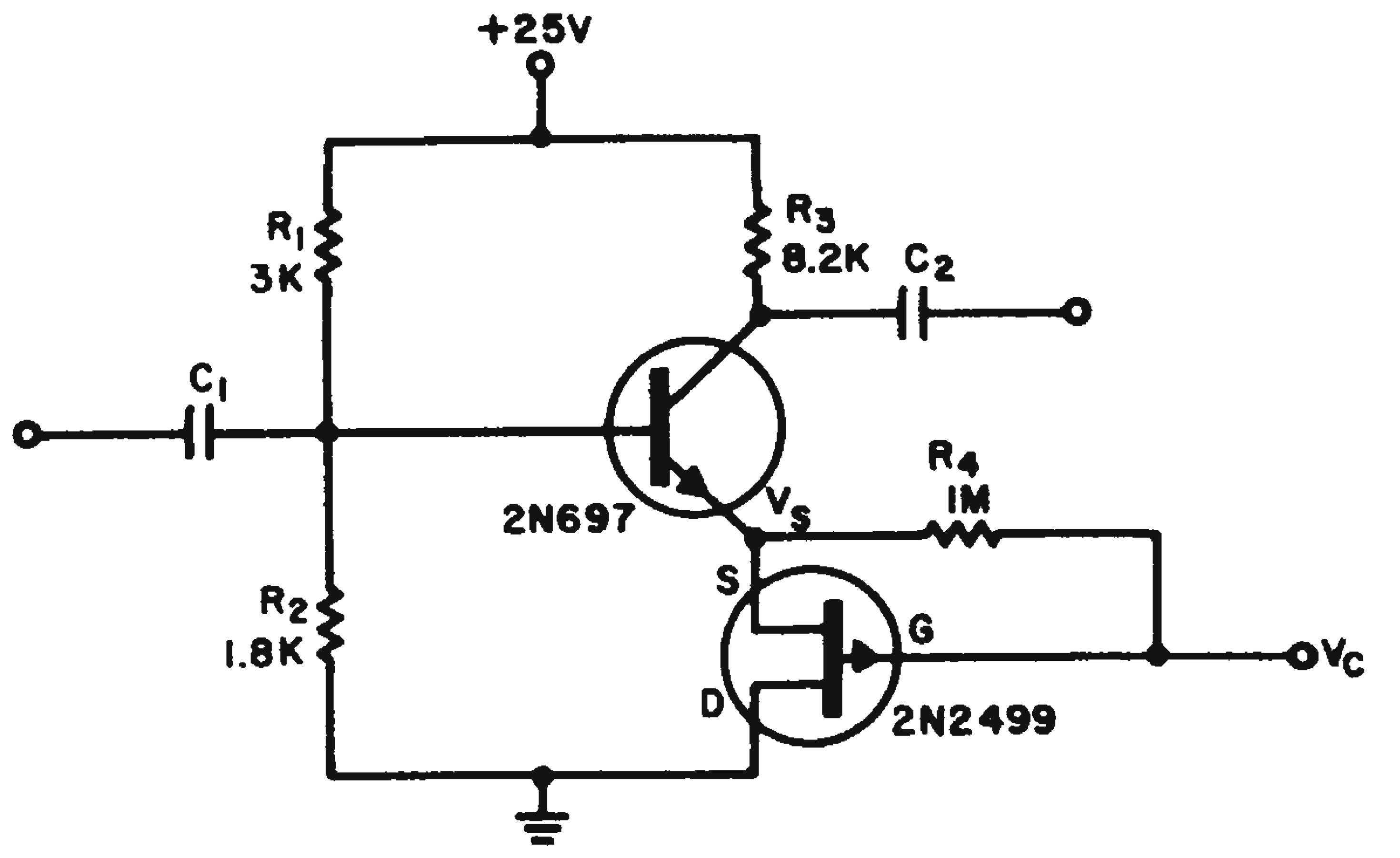

Gain control over a 75-db range can be obtained by using a field-effect transistor as a variable resistance.

Maximum gain occurs when V_g is equal to the source voltage V_s. At this point the channel-to-gate junction is just cut off. The amplifier gain is then decreased by increasing V_g until pinch-off occurs.

For the circuit shown, amplifier gain variations from 10 to 1.45×10^{-3} were obtained.

Robert B. McIntosh, Jr., General Precision, Inc., Little Falls, N. J.

Selective AF Amplifier Has Simplified Feedback Circuit

Here is a tuned af amplifier that has the sharply peaked output of one using a bridged-T network in the negative feedback loop. Yet it requires only one capacitor and one inductor for tuning.

Capacitance C_3 is chosen to resonate inductor L at the desired operating frequency. (A set of capacitor decades will allow coverage from 20 to 20,000 cps.)

All frequencies are fed back degeneratively, except the resonant frequency of LC_3, which is trapped by this parallel-resonant circuit. The amplifier gain consequently peaks at this frequency, as shown in the diagram.

The sharpness of tuning is increased markedly by adding positive feedback. This is provided by T, R_5, and R_6. R_5 is set just below the point at which the amplifier breaks into self-oscillation.

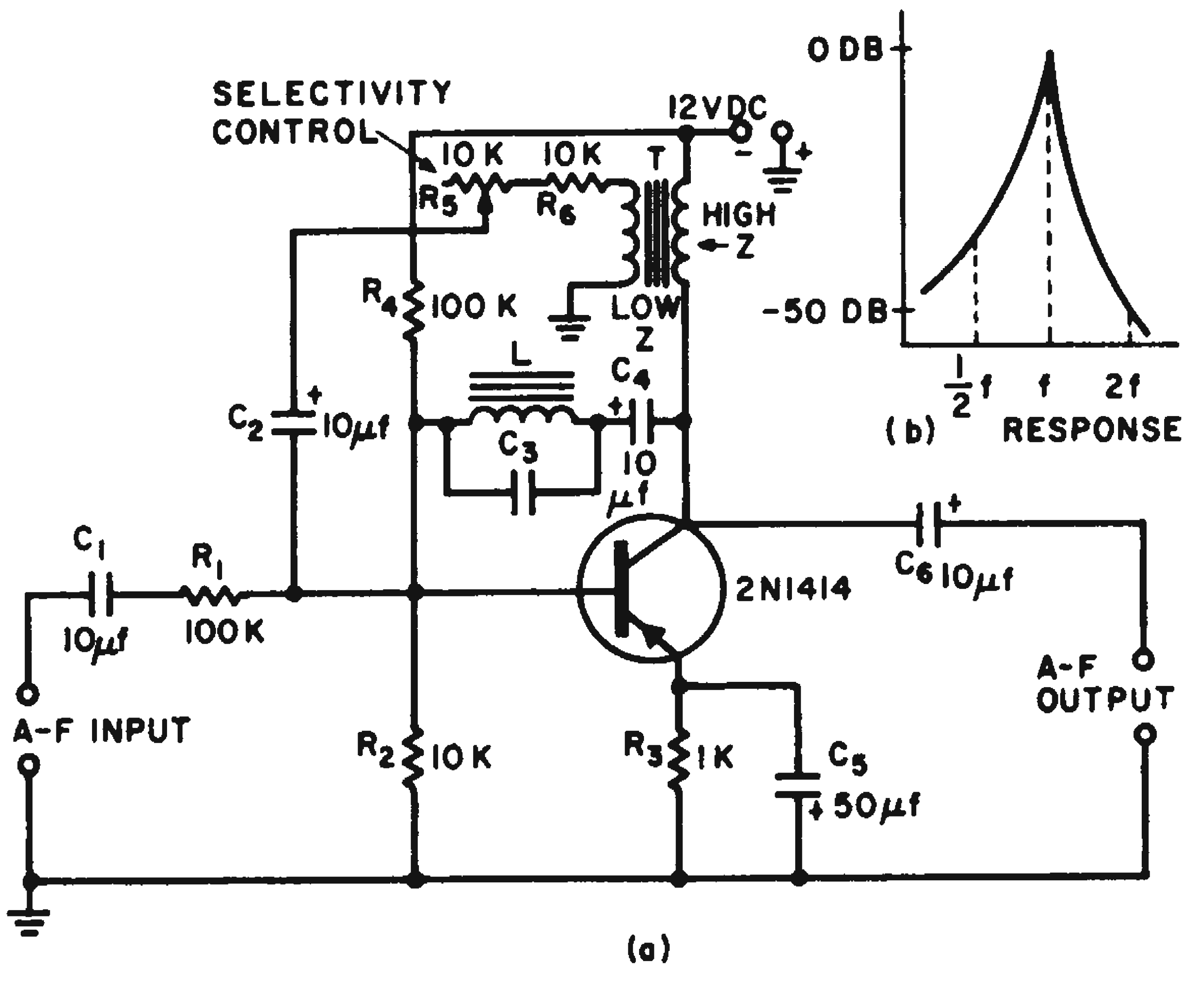

Selective amplifier is useful as a tunable bandpass filter, vswr indicator meter, wave analyzer, cw filter, telemetering or strain gage amplifier, and selective null detector.

Capacitors C_1, C_2, C_4, and C_6 provide dc blocking. T is a 2:1 ratio interstage transformer with good frequency response.

At tuned peak output and with an external load not lower than 2000 ohms, voltage gain of the amplifier is 20, for a maximum input of 50 mv rms.

Rufus P. Turner, consulting engineer, Altadena, Calif.

Three-Transistor Buffer Offers Lower Offset and Drift

The three-transistor buffer circuit in the diagram has lower dc offset voltage (an improved drift characteristic) than a conventional three-transistor Darlington circuit. Gain is virtually unity.

Linearity is inherently good since the change in emitter current of Q_1, over the input voltage dynamic range, is held to a small value by the feedback provided around the loop involving Q_2 and Q_3. This is equivalent to the linearity of the Darlington connection as seen on the emitter of Q_1, rather than the output. A linearity of better than 0.05 per cent over a 5-volt dynamic range is possible with this configuration.

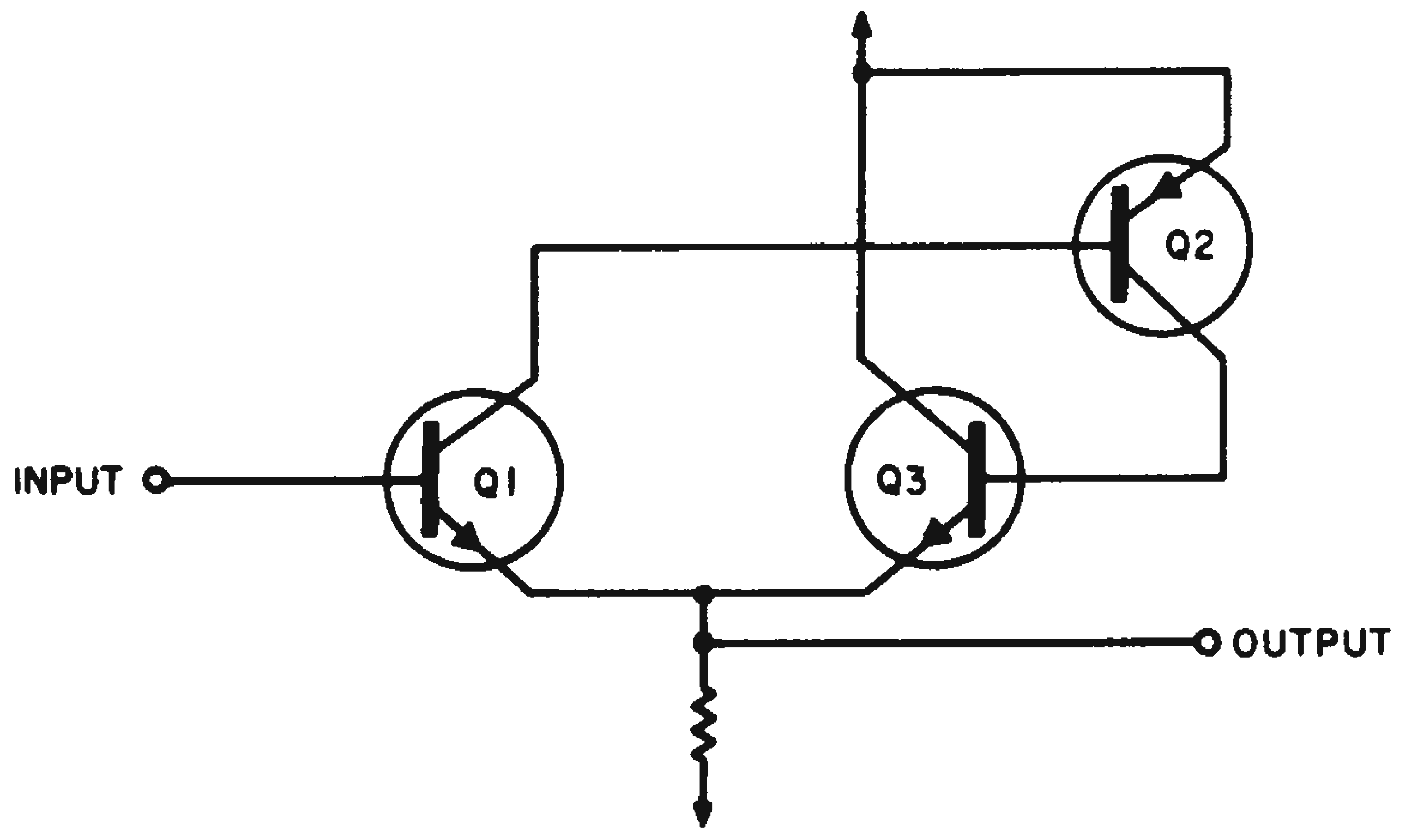

Three-transistor buffer circuit gives lower dc offset and better drift characteristics than conventional Darlington circuit.

The current gain of the circuit is:

$$\frac{\Delta I_{out}}{\Delta I_{in}} = B_1B_2(B_3 + 1) + B_1 + 1$$
$$= B_1B_2B_3 + B_1B_2 + B_1 + 1$$

While the current gain for the Darlington connection is:

$$\frac{\Delta I_{out}}{\Delta I_{in}} = (B_1 + 1)(B_2 + 1)(B_3 + 1)$$
$$= B_1B_2B_3 + B_1B_2 + B_2B_3 + B_1$$
$$+ B_2 + B_3 + 1$$

Since the dominant term in each expression is $B_1 B_2 B_3$, the advantages of the new configuration are achieved with very little sacrifice in current gain.

John O. Bowers, staff engineer, Dynatronics, Inc., Orlando, Fla.

Isolation Unit Amplifies DC Currents and Voltages

Measuring currents and voltages at points remote from ground can present problems due to noise and impedance. In our particular application a simple transistor chopper or diode modulator was considered inadequate for the job. An isolated stage of power gain with transformer coupling to ground was found capable of raising the wide dynamic range signals to useful levels.

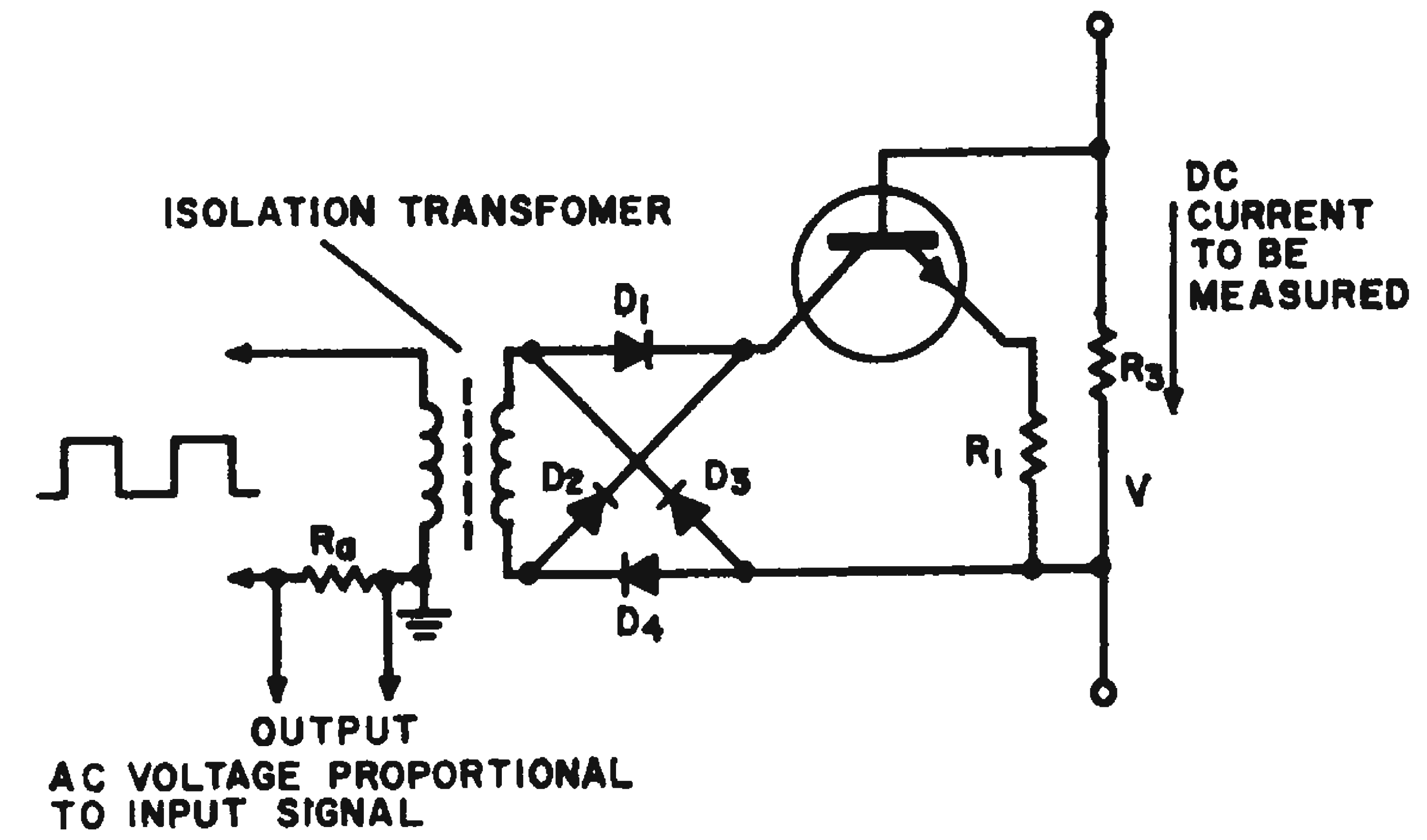

Wide dynamic range isolation amplifier converts a floating signal current or voltage into a proportional ac current drain on the power source.

As shown in the diagram, a remote emitter follower is powered by the alternate half cycles of a square wave supplied by the transformer. Base drive for the follower is provided by the signal to be measured. If the signal is a voltage, it can be applied directly to the base. If a current is being measured the signal flows through precision resistor R_3 connected to the base. Most signal-type low-leakage silicon transistors having a flat high-current gain of about 100 are good for this application. A wide dynamic range will require a transistor having a high breakdown voltage. Germanium transistors are useful at lower levels, providing temperature is not a problem.

The transformer should have good efficiency, and should have the necessary breakdown characteristics for the desired isolation voltages.

In operation the signal base voltage V in conjunction with resistor R_1 establishes a collector current $I_C = V/R_1$ when diode bridge $D_{1\text{-}4}$ conducts power to the transistor. This constant square-wave current is proportional to the signal current. Therefore, by determining the primary current from the ac drop across R_2, the signal voltage is accurately known. The device is, therefore, a true and stable current amplifier that can measure from a few tenths of a volt to 100 volts; or a few microamps to thousands of amps, at high potential or at high impedance above ground. Of course, due to transistor saturation, a limited current gain, and leakages, there is always some residual signal.

Patrick f. Howden, consultant, Malibu Rd., Malibu, Calif.

Field Effect Transistor Improves Low Pass Filter Action

A field-effect transistor can be used to advantage in a low-pass active amplifier circuit because of its low noise characteristics. The FET has the additional advantage of a very high input impedance which causes almost no loading of the RC lowpass network of the filter.

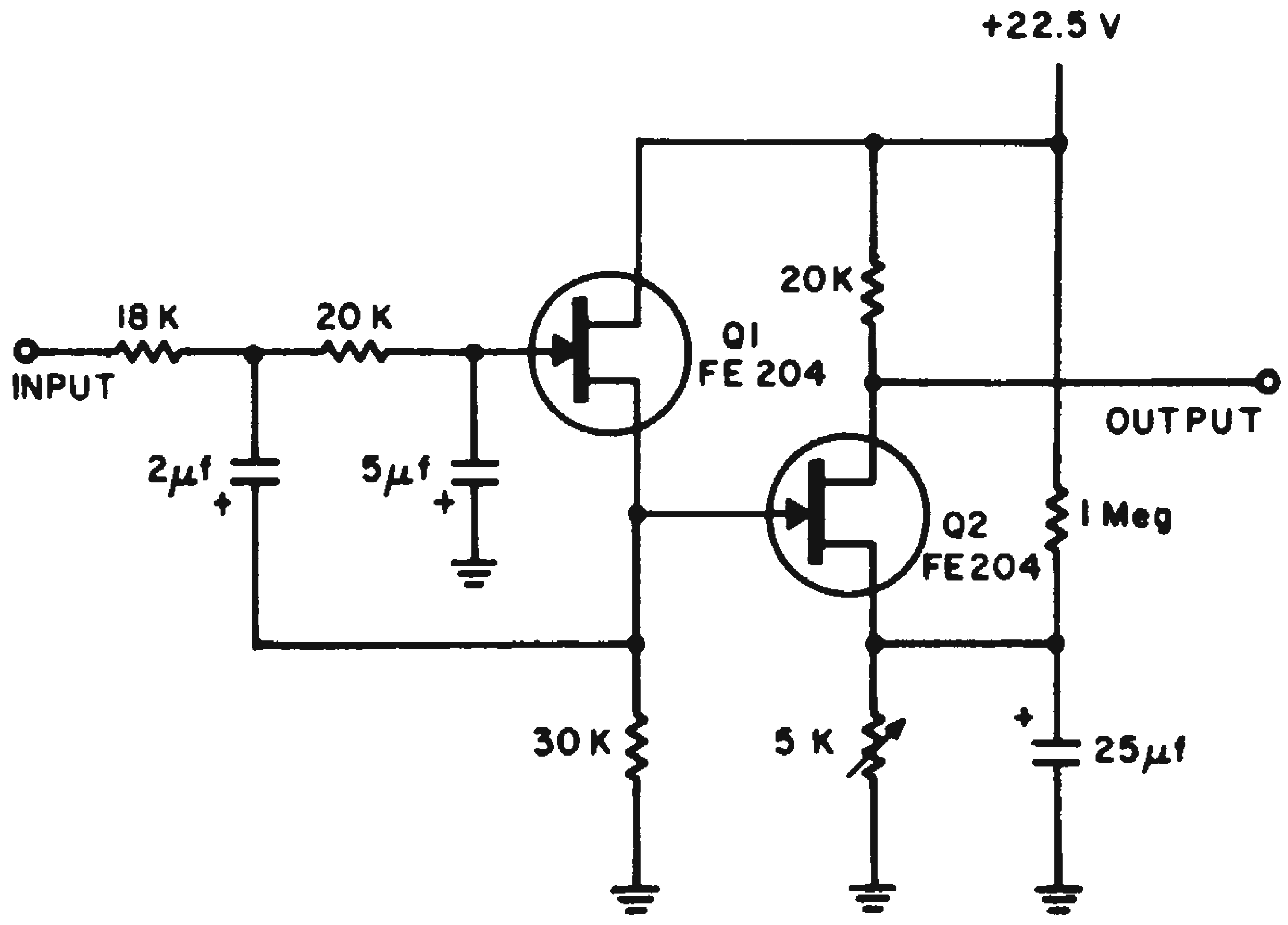

Low noise characteristic of FET is used to advantage in low-pass filter circuit with a voltage gain of 2.5.

To illustrate these advantages, a low-pass (dc to 1 cps) filter was constructed. The filter roll-off was exactly 12 db per decade of frequency. The noise referred to the input of the filter was 15 μv per root cycle. A similar filter utilizing a low-noise transistor had 140 μv per root cycle of noise referred to its input.

Thomas F. Prosser, staff engineer, Amelco, Inc., Mt. View, Calif.

Selective Amplifier Uses Bridged-T Control

Negative feedback can be useful in obtaining good selectivity with a minimum of parts. In the practical amplifier circuit shown here, a single-tuned impedance matching transformer provides a broad selectivity curve between a mixer and Q_1. Q_1 amplifies equally all signals present at T_1 secondary. A portion of the output of Q_1 is tapped off to be applied to the following stage.

Most of the output of Q_1 is passed on to the base of Q_2 through L_1 which passes all frequencies except its tuned frequency. The signal from the emitter of Q_2 is applied to the base of Q_1 where it cancels all incoming frequencies except those falling within the passband of the bridged-T. The passband of the amplifier will be much narrower than that obtainable with several synchronously tuned transformers.

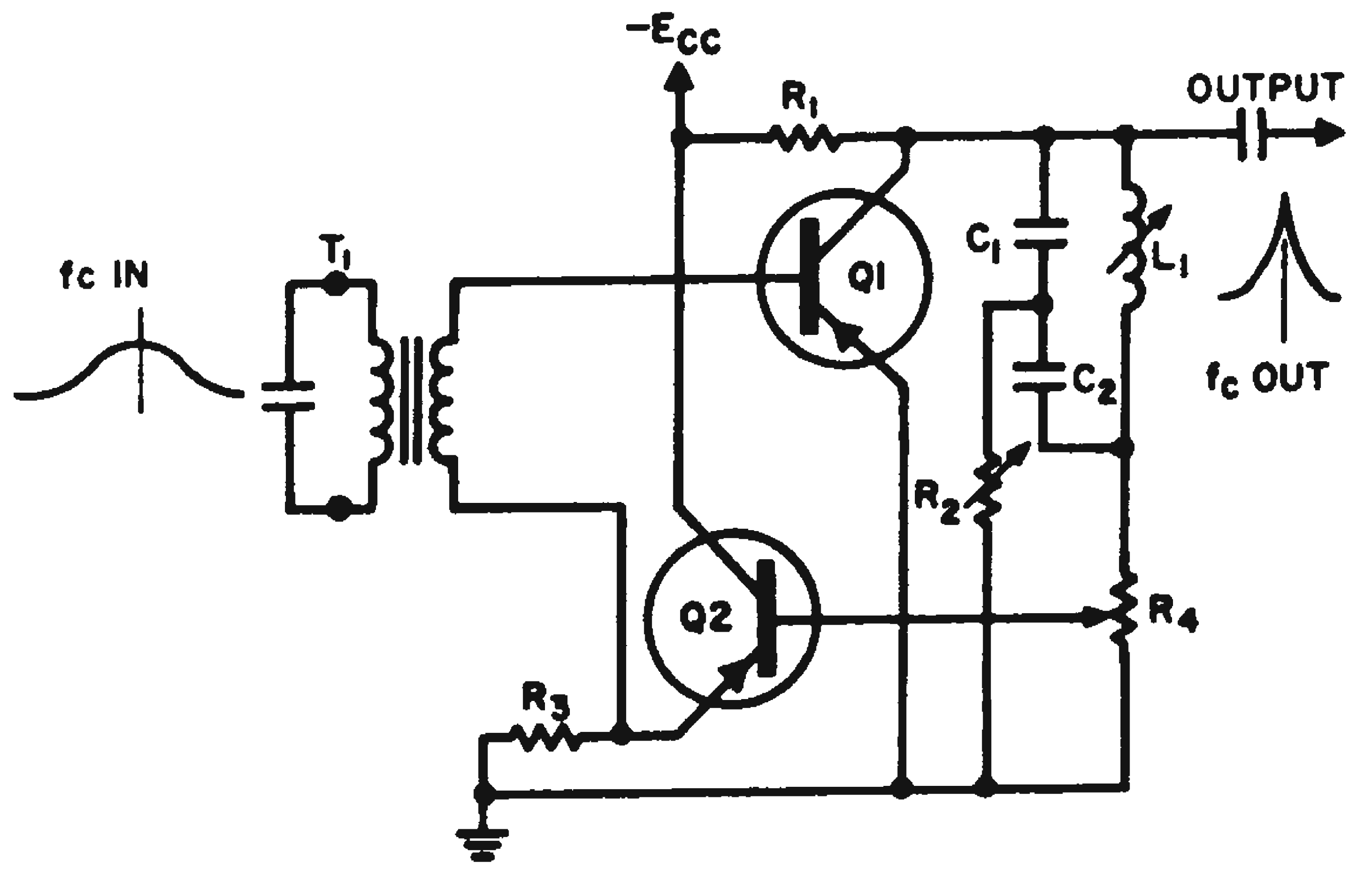

Bandpass amplifier uses negative feedback to obtain selectivity with a minimum of components.

An additional feature of the circuit is the control of stability provided by the bias-bootstrapping of Q_1 and Q_2. Both operating point and gain of the feedback pair may be set by R_4. Selectivity is controlled by the bridged-T null resistor R_2. The circuit will not normally oscillate because Q_2 provides less than unity gain. In this respect the final circuit cannot be considered to be a Q-multiplier.

Leonard E. Geisler, publications engineer, Sparton Electronics Div., Sparton Corp., Jackson, Mich.

Decoupling Capacitor Eliminated by Bifilar Transformer

Bifilar-wound transformers are frequently used in intermediate-frequency circuits as direct equivalents of capacitance-coupled single-tuned circuits. Since, bifilar wire is constructed of parallel wires having constant spacing, it behaves as a transmission line with characteristic impedance depending on distributed inductance and capacitance. For any line, the characteristic impedance is a function of the logarithm of the ratio of the spacing between wire centers to their radius. For all gages of bifilar wire, this ratio is a constant so that their characteristic impedance is constant and approximates 60 ohms.

Referring to Fig. 1a, if the electrical length of the wire used in the transformer is a quarter wavelength at the operating frequency, it will appear to point *A* as a short circuit. The equivalent circuit is shown in Fig. 1b. If the wire length is not a quarter wavelength, it is still an impedance transformer, which can be used to transform the tube shunt capacity at *B* to a low impedance value at *A*. In either case the impedance appearing at *A* will be sufficient to decouple this point to ground.

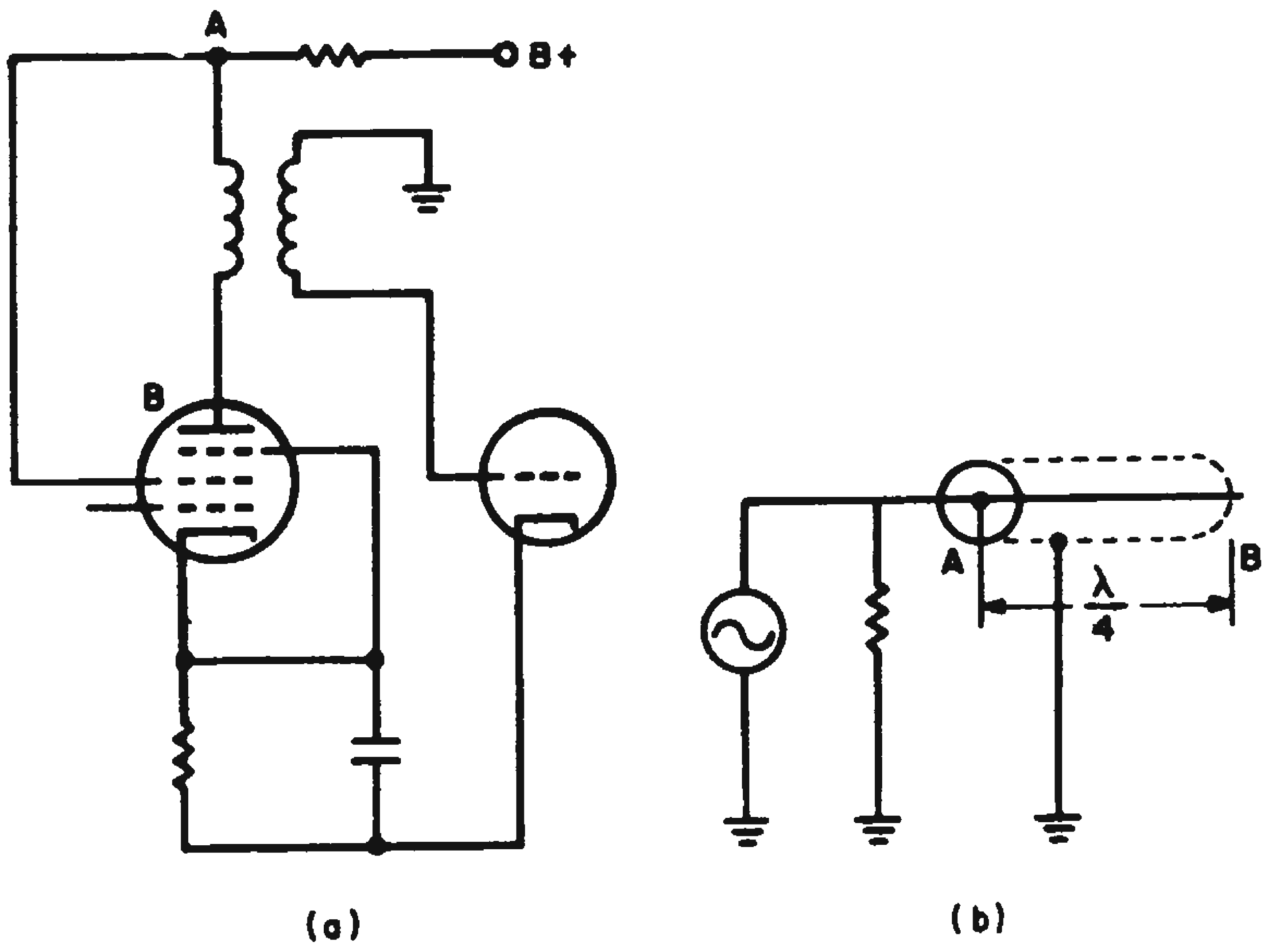

Quarter-wave length of bifilar wire provides interstage coupling and decoupling of stage.

Martin E. Doyle, senior engineer, Surface Radar and Navigation Operation, Raytheon Co., Wayland, Mass.

Programmed Video Gain Control Is Linear Over 6-DB Range

A straightforward means of performing dynamic gain control is illustrated by the simple voltage divider network of Fig. 1 where resistor R_s, the output of the attenuator, is made to vary. If R_s is the saturation resistance of transistor Q_2 in Fig. 2, it can be seen that varying the input voltage to Q_2 is a simple, direct method for modulating R_s.

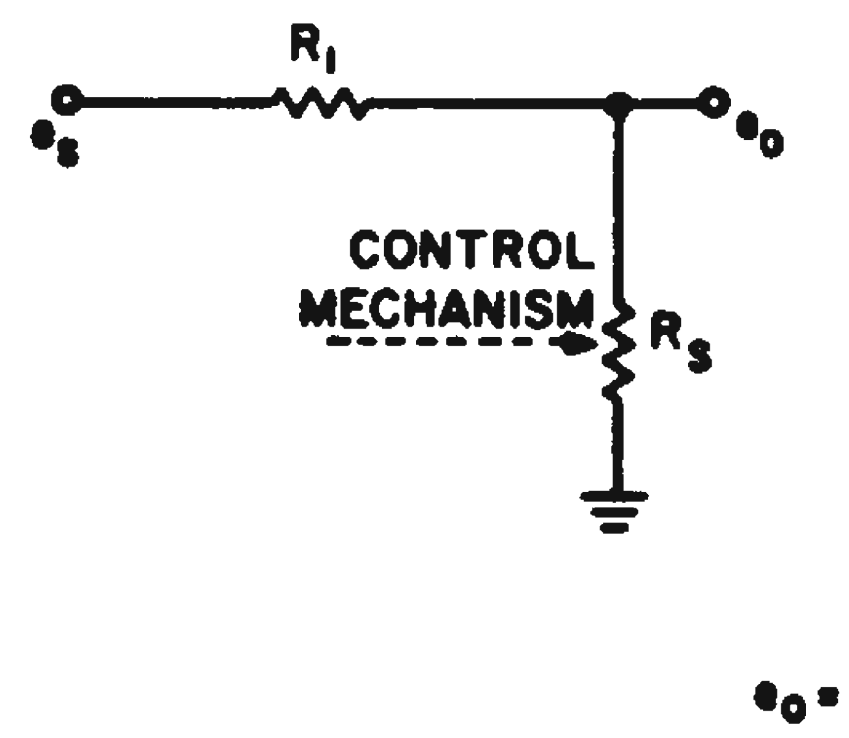

$$e_o = e_s\left(\frac{R_s}{R_1+R_s}\right)$$

IF $R_1 >> R_s$, THEN

$$e_o \cong e_s\left(\frac{R_s}{R_1}\right)$$

$e_o = KR_s$, WHERE K (A CONSTANT) $= \frac{e_s}{R_1}$

Fig. 1. Basic principle of video gain control where R_s is the saturation resistance of a transistor.

The input voltage to the circuit of Fig. 2 can be considered a control. Therefore, varying R_s essentially will be changing the network gain as a function of the control voltage. Hence the gain control feature.

A nonlinear relationship exists between the control driving voltage and the saturation resistance, especially in the neighborhood of a 2:1 or 6-db gain control. It may then be desirable to add a diode compensating circuit to make the saturation resistance an almost linear function of the control voltage over this 7-db control range.

Fig. 3 illustrates the effect of the nonlinear diode characteristic in cancelling the effect of the saturation-resistance characteristic of the transistor.

To prevent the control voltage from appearing together with the signal at the output it may be blocked if $f_{control} \ll f_{signal}$, or it may be cancelled at the output if a balanced form of the above network is devised. If temperature variation of R_s creates a network gain stability problem, R_1 could be a thermistor, with its temperature coefficient matched to the temperature coefficient of R_s.

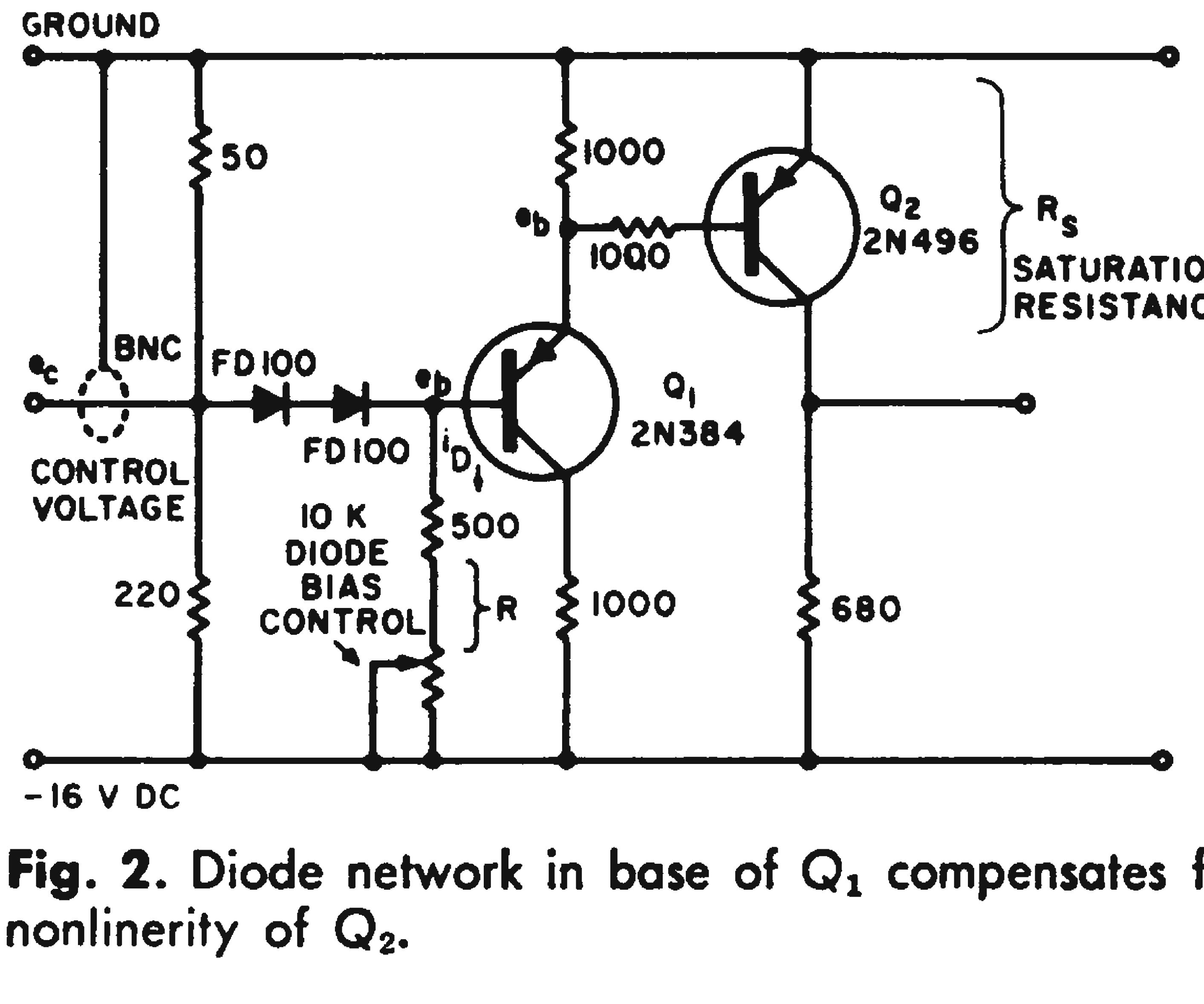

Fig. 2. Diode network in base of Q_1 compensates for nonlinerity of Q_2.

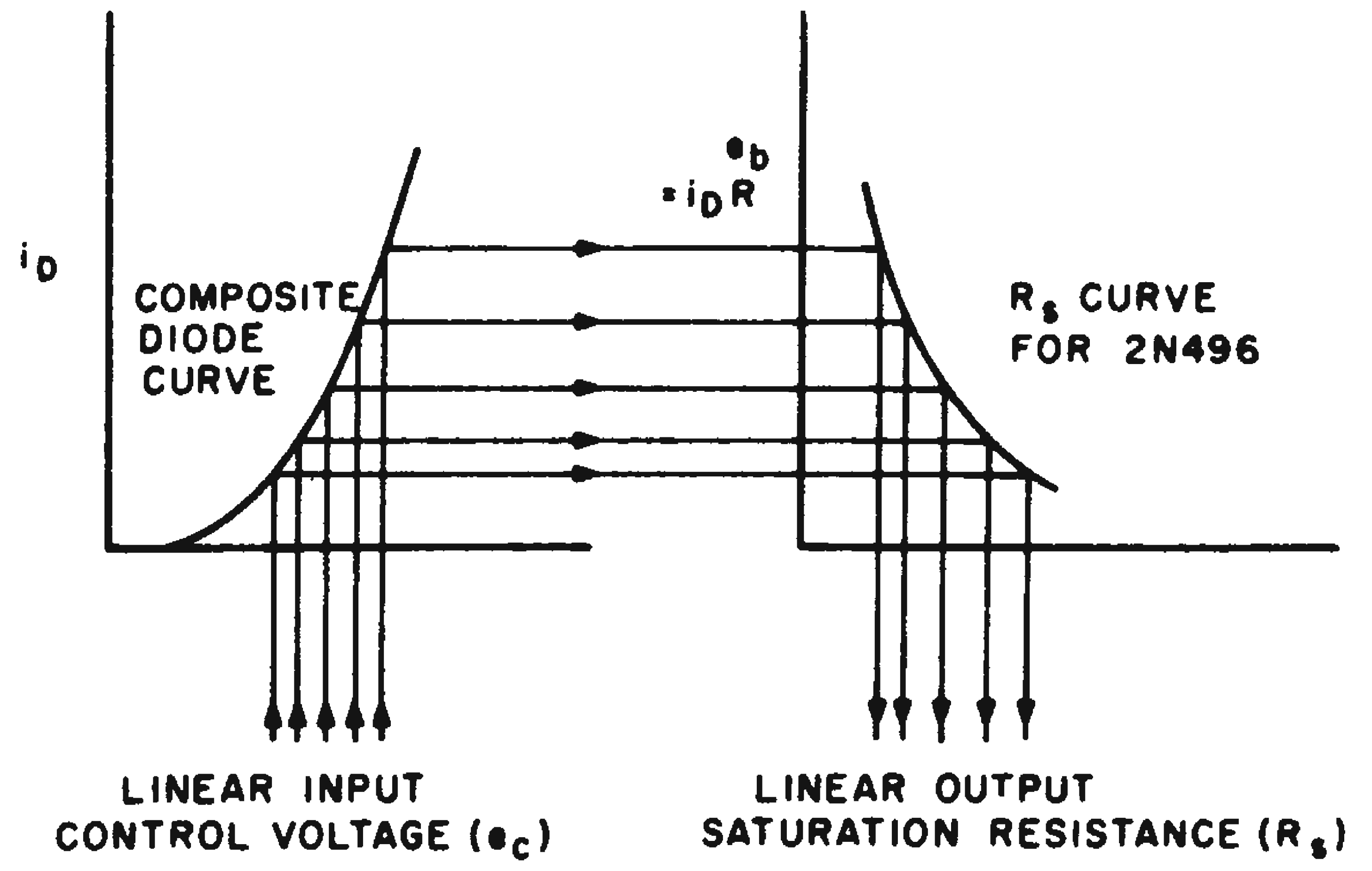

Fig. 3. Diode characteristics are selected to cancel nonlinearity of R_s.

Charles H. Karr, staff engineer, General Atronics Corp., Conchohocken, Pa.

Neutralization Extends Range Of Differential Amplifiers

High-gain differential amplifiers have a limited frequency response due partly to capacitive loading and partly to the Miller effect. When the amplifier is driven from a fairly high-impedance source, the Miller effect will cause the high-frequency cutoff to drop to a few kilocycles.

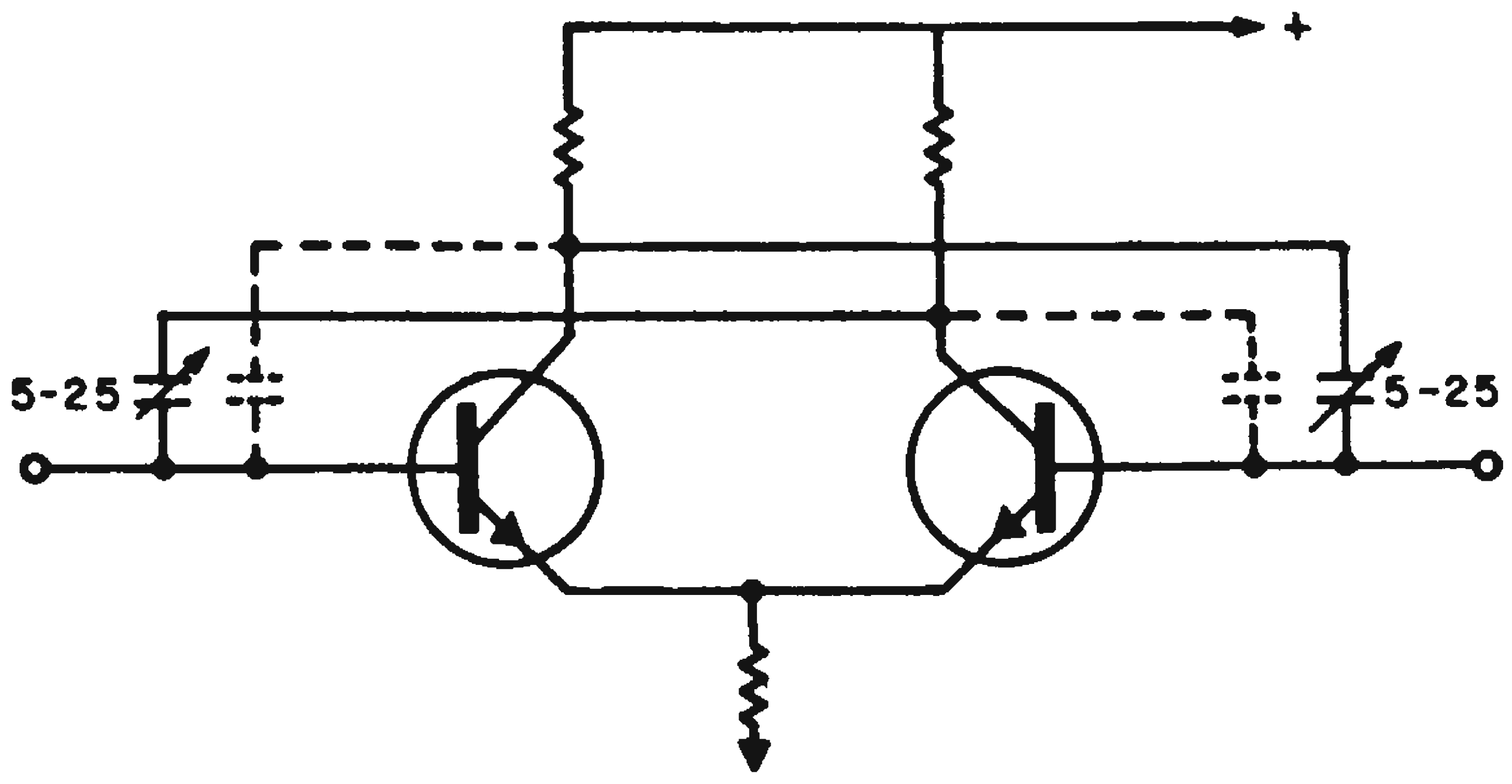

Neutralization technique applied to differential amplifier can extend high frequency range by a decade.

By applying the rf technique of neutralization, the cutoff frequency may be extended to that caused by capacitive loading, without sacrificing low-frequency gain. In a moderate gain amplifier, a decade (20 Kc to 200 Kc) improvement in high-end response results from use of this technique.

The two trimmers are adjusted to match the internal plus external collector-base capacitance. Since the two collectors have the same output 180 degrees apart, capacitive feedback is neutralized and amplifier response is extended. If the transistors have a large h_{re}, appropriate resistors may be paralleled with the trimmers.

Royal W. Eckstein, Jr., electronics engineer, U.S. Naval Avionics Facility, Dept. of the Navy, Indianapolis, Ind.

Low-Noise Preamplifier Gives High Input Impedance

Field-effect transistors are a natural choice for a solid-state preamplifier with low noise and high input impedance. However, there can be many problems involved in the design. The drift in drain current caused by changes in generator impedance, and by the nonlinear changes in transconductance, makes the field-effect transistor difficult to use in conventional circuits.

The drift problems can be minimized by collector-to-source feedback as shown in the diagram. This also stabilizes the operating point and compensates for the nonlinear transconductance.

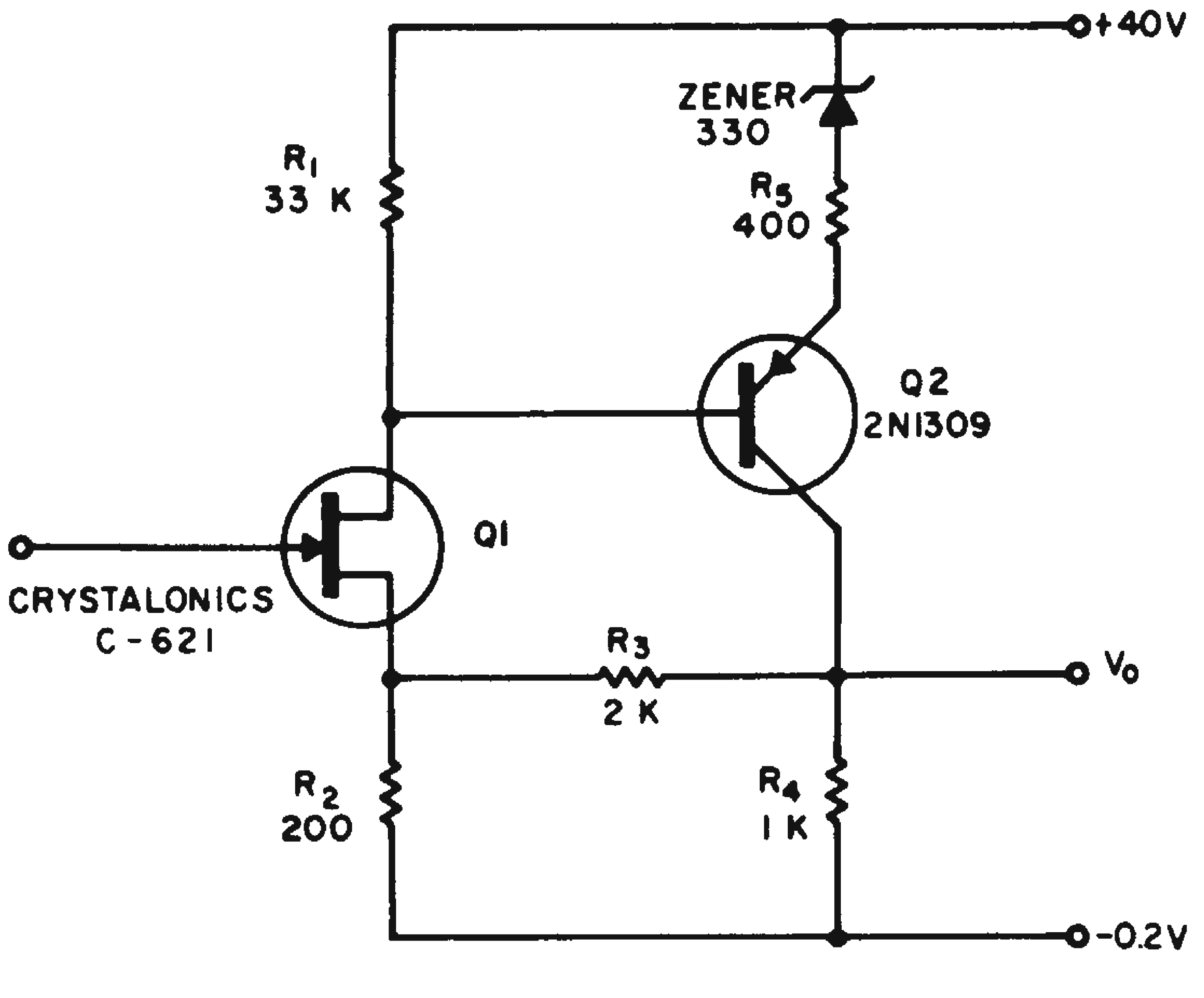

Collector-to-source feedback minimizes drain-current drift in low-noise preamplifier.

The use of the Zener diode and series resistor enables the input impedance of the transistor to nearly match the output impedance of the field-effect transistor. This allows almost all of the gain to be obtained in the field-effect unit and results in very low noise.

The circuit shown has about 80-db gain, an equivalent input noise figure of about 2 μv, and an input impedance of 3000 megohms.

Marvin E. Lyles, senior research assistant, Beckman Instruments, Inc., Fullerton, Calif.

Diodes Prevent Damage To Transistor Emitter Followers

The addition of two diodes to a conventional emitter follower circuit can prevent damage to the transistors when a short occurs at output. In normal operation, e_2 follows e_1, and the presence of diodes D_3 and D_4 does not affect the operation of the circuit. The 510-ohm input resistor limits input impedance of the stage when short occurs at output. Under these conditions, diodes D_3 and D_4 clamp e_1 to the shorted output. Therefore, excessive current cannot flow through either transistor regardless of the input voltage.

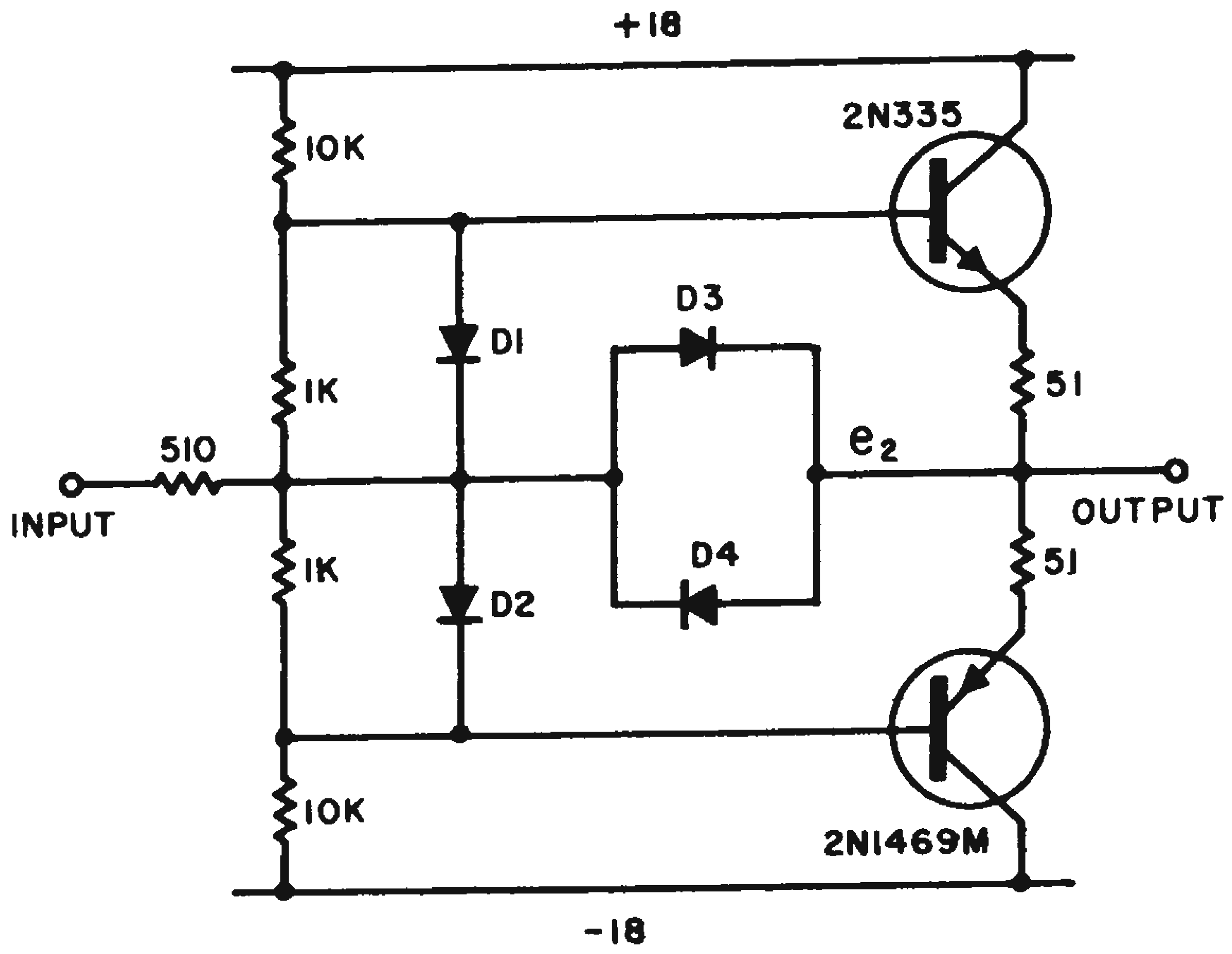

Added diodes limit stage input impedance under short circuit conditions.

Francis R. Lindsay, engineer, Sperry Piedmont, Charlottesville, Va.

Stable DC Amplifier Makes Good Level Changer

A common-base transistor stage plays an important role in this dc inverting amplifier. In combination with the conventional common-emitter first stage it produces a highly linear, temperature-stable sign and level changing unit. The circuit's equations are:

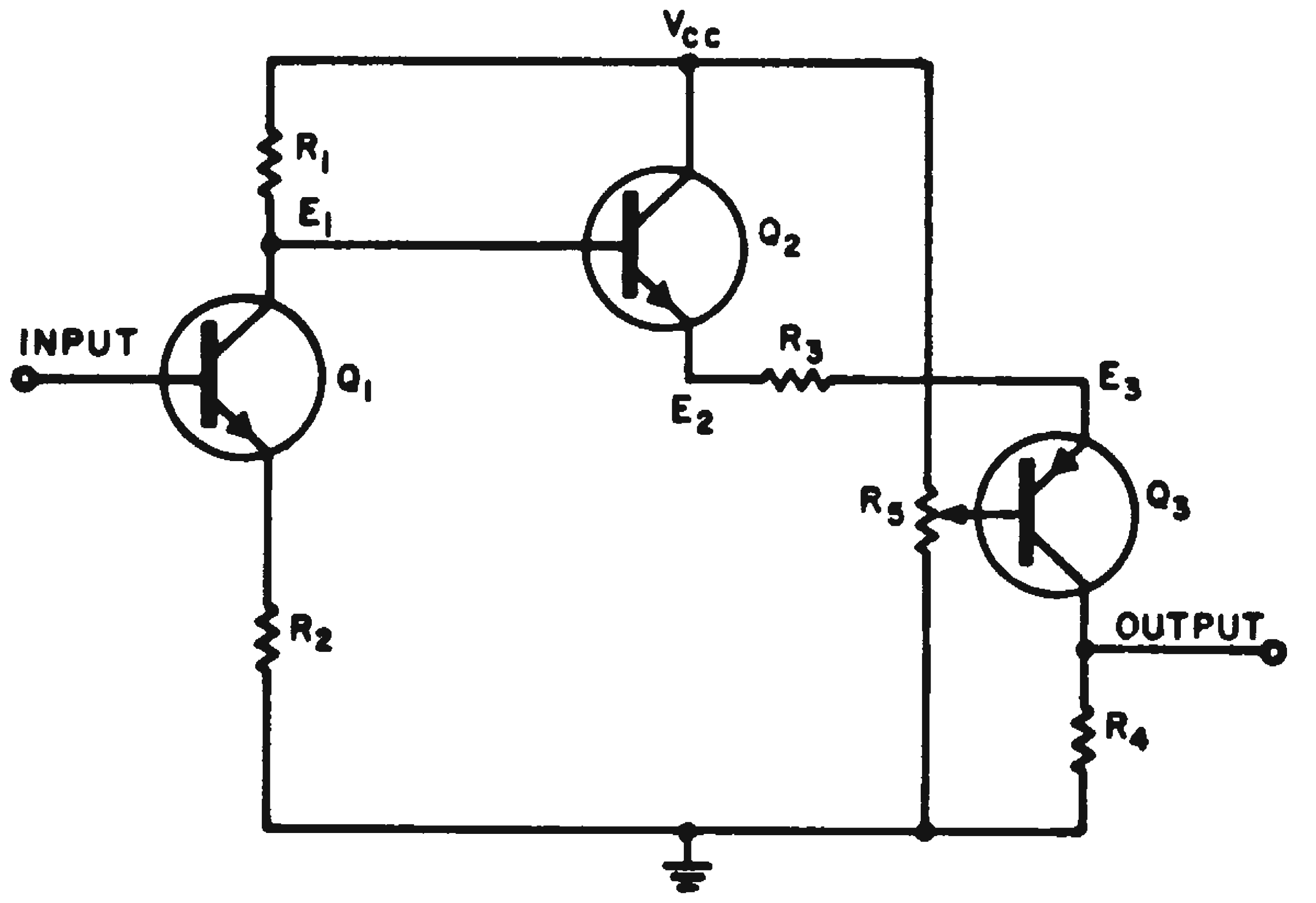

Fig. 1. Circuit that can be used whenever an output that is separated by a constant from the input is desired.

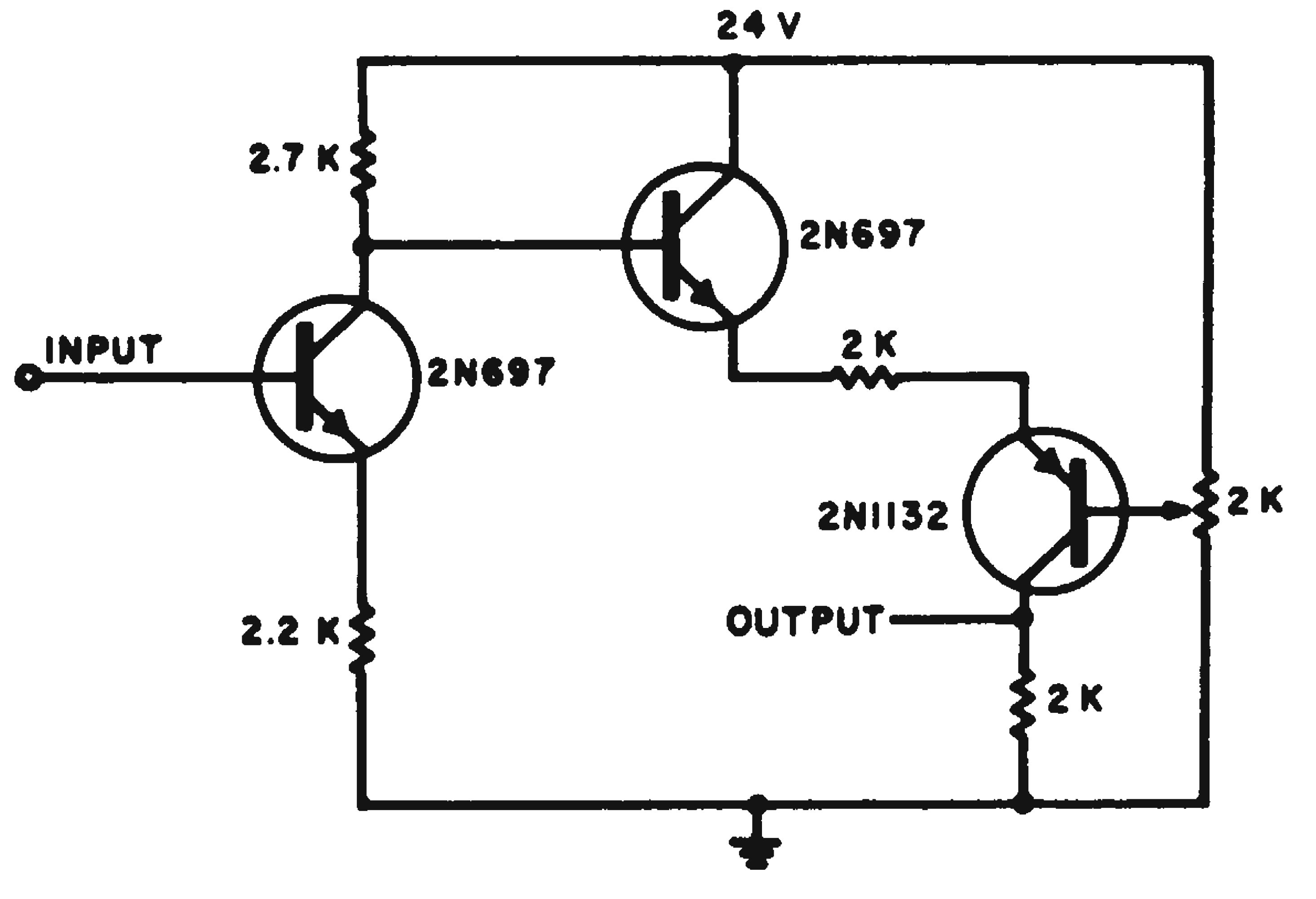

Fig. 2. Example of circuit with 1:1 relationship between the input and output.

$$E_{out} = I_{c_3} R_4 \qquad (1)$$

$$I_{c_3} = \mathcal{L}_3 I_{e_3}, \quad \mathcal{L}_3 \cong 1$$

$$I_{e_3} = \frac{E_2 - E_3}{R_3} \qquad (2)$$

combining Eqs. 1 and 2.

$$E_{out} = \left(\frac{E_2 - E_3}{R_3}\right) R_4 \qquad (3)$$

$E_1 = V_{cc} - E_{in} Av_1 \qquad Av_1$ = voltage gain of Q_1 (4)

$$E_2 = E_1 - 0.6$$

$$E_2 = V_{cc} - E_{in} Av_1 - 0.6 \qquad (5)$$

combining Eqs. 3 and 5

$$E_{out} = (E_{cc} - E_{in} Av_1 - 0.6 - E_3)\frac{R_4}{R_3} \qquad (6)$$

a 1:1 relationship between the output and the input set:

$$R_4 = R_3 \qquad Av_1 = 1$$

Eq. 6 now becomes:

$$E_{out} = V_{cc} - E_{in} - 0.6 - E_3 \qquad (7)$$

Since E_3 = Constant (the voltage is set by R_5)

$$V_{cc} - 0.6 - E_3 = \text{Constant} = K$$

$$E_{out} = K - E_{in}$$

Note: This equation holds for inputs greater than 0.6 v.

Design Procedure: From the known input, select the wanted output relation (for example, 1:1, 2:1, etc.) Make sure that V_c is greater than two lines maximum E_{in} (*max*) so Q_1 will not saturate and adjust R_5 so that the output of Q_3 with no input is E_{in} (*max*) now as the input is increased, E_1 and E_2 decreases and the output decreases.

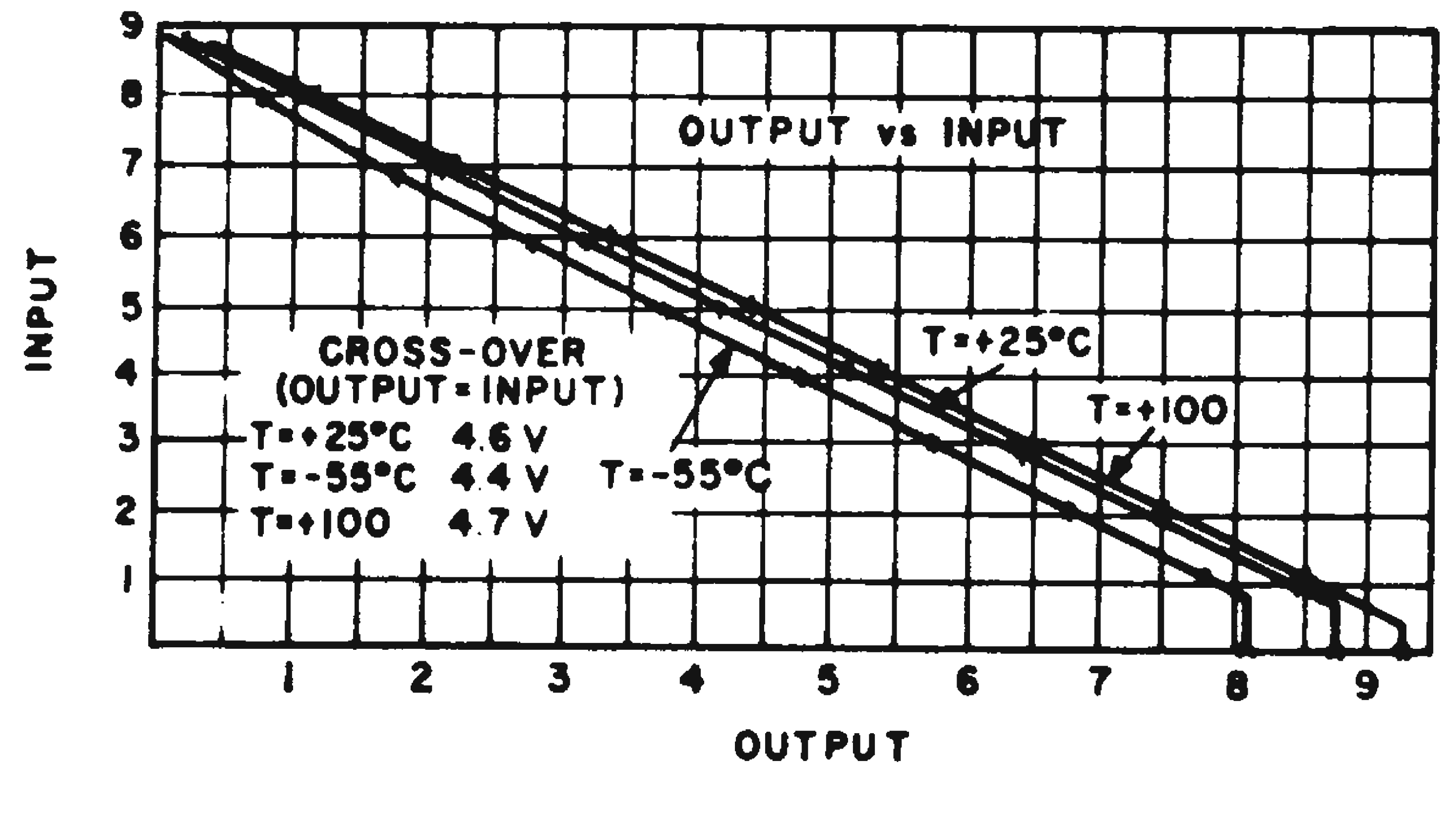

Fig. 3. The linearity and the temperature stability of the circuit in Fig. 2 is fairly good.

Example: Input 0-9 v: output 9-0 V_{cc} = 24 v, 1:1 relationship. The graph shows the output is quite linear, and fairly independent of temperature.

Richard S. Hughes, electronic engineer, U.S. Naval Test Station, China Lake, Calif.

Five-Amp DC Current Amplifier Has Low Output Impedance

The circuit described here was developed to fill the need for a dc current amplifier capable of delivering up to ±5 amp to a 2-ohm load. Low output impedance was necessary to provide damping for a voice-coil type load.

The basic circuit (Fig. 1) is a bridge configuration, with an emitter follower and a constant current source in the active arms. The current source arm of the bridge provides lower average dissipation than a straight resistive arm. This source is composed of transistor Q_4, whose base is held at a fixed potential by a Zener diode. Emitter current from Q_4 flows through a resistive load composed of several paralleled 6-v bulbs. The number of bulbs used determines the amount of current required to raise the emitter of Q_4 to a stable point near the base voltage. Straight resistors could be used instead of the bulbs, but the positive temperature coefficient of the bulbs provides additional current regulation.

The remainder of the circuit consists of three compound emitter followers, Q_1, Q_2 and Q_3. These provide large current gain and moderate input impedance. A zero adjust control allows initial balancing of the circuit, and the offset adjust provides a voltage to buck-out the base-to-emitter voltage drops of Q_1, Q_2 and Q_3.

The two batteries shown are unequal in voltage to make up for the 4.5-v drop across the lamp bulbs. This permits equal maximum voltage swings across the output load.

J. Wisnia, Comstock & Wescott Inc., Cambridge, Mass.

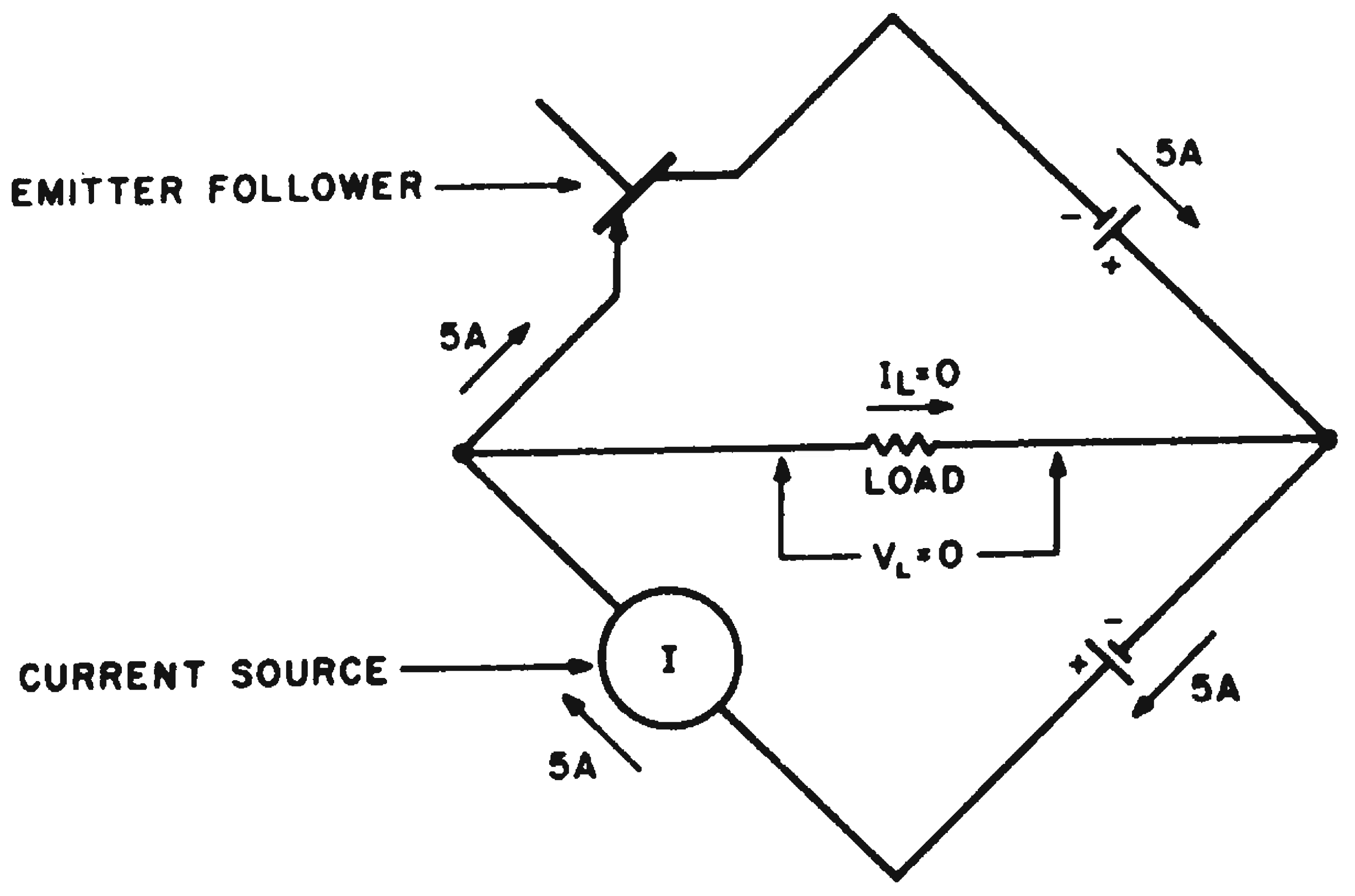

Fig. 1. Bridge currents at balance.

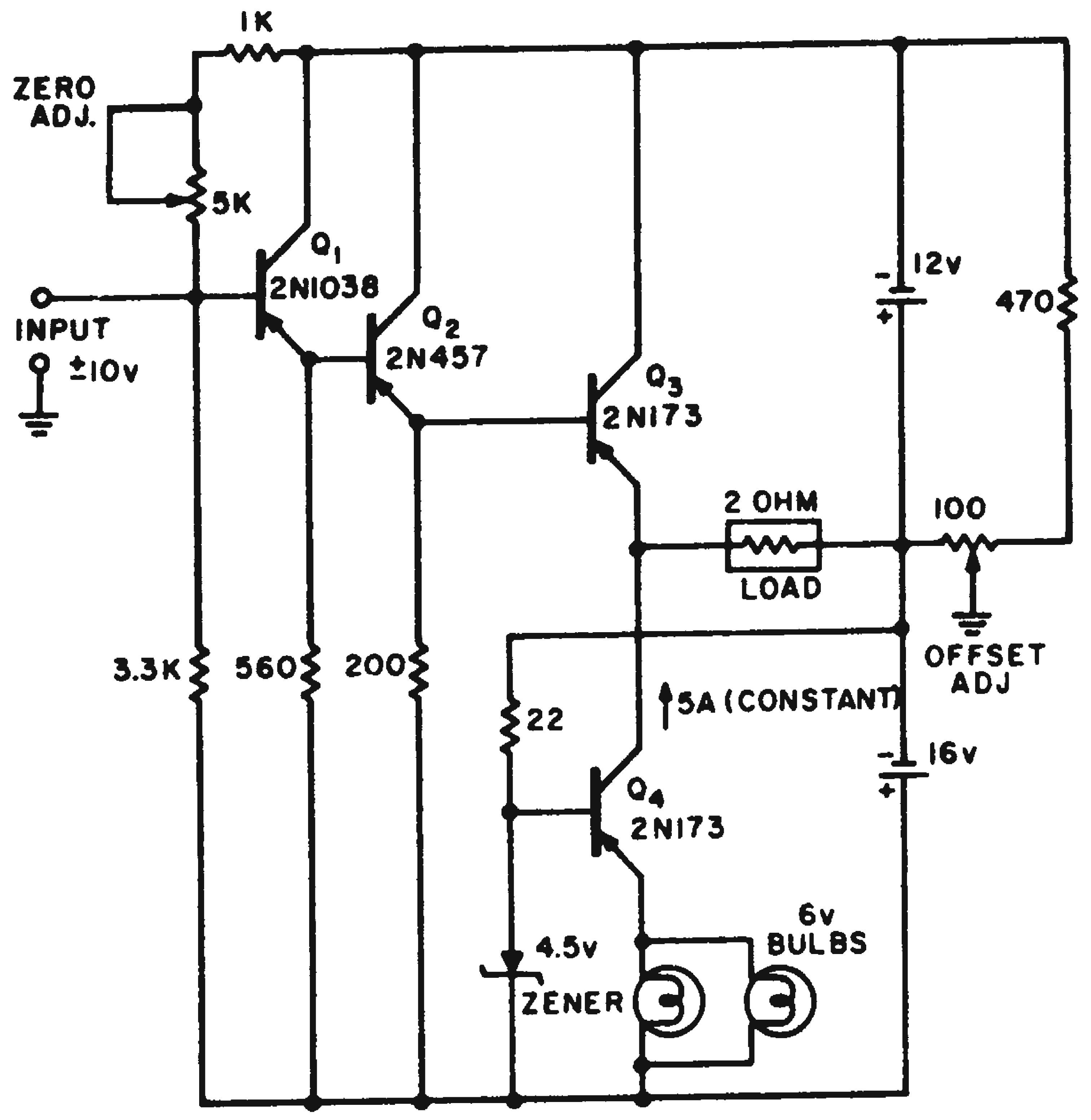

Fig. 2. Current amplifier was designed to drive 2-ohm voice-coil type load with maximum damping.

Bridged-T Feedback Yields "Maximally Flat" Response

The "maximally flat" response characteristic obtainable with staggered amplifier pairs can be synthesized by using plate-to-grid degenerative feedback in "feedback pairs." This eliminates the problem of staggering the individual responses. The circuit arrangements of (a) and (b) are most commonly used. Either circuit can be made essentially equivalent to the other by using π to T transformation equations.

In practice, it has been found that the inherent shunt capacitance across R_F—the feedback element in each of the circuits—affects the response by providing either too much or too little feedback at the high frequency end of the band. Thus, the response of the circuit of (a) tends to have a negative slope, while the response of the circuit of (b) tends toward a positive slope.

By combining both feedback configurations in one "bridged-T" network, (c), the effects of shunt capacity across the feedback elements tend to cancel. If the resistors are chosen correctly so that the total feedback remains the same as for either circuit alone, the response will be "maximally flat" as in a corresponding staggered pair.

Ernest I. Fox, engineer, Raytheon Co., Sudbury, Mass.

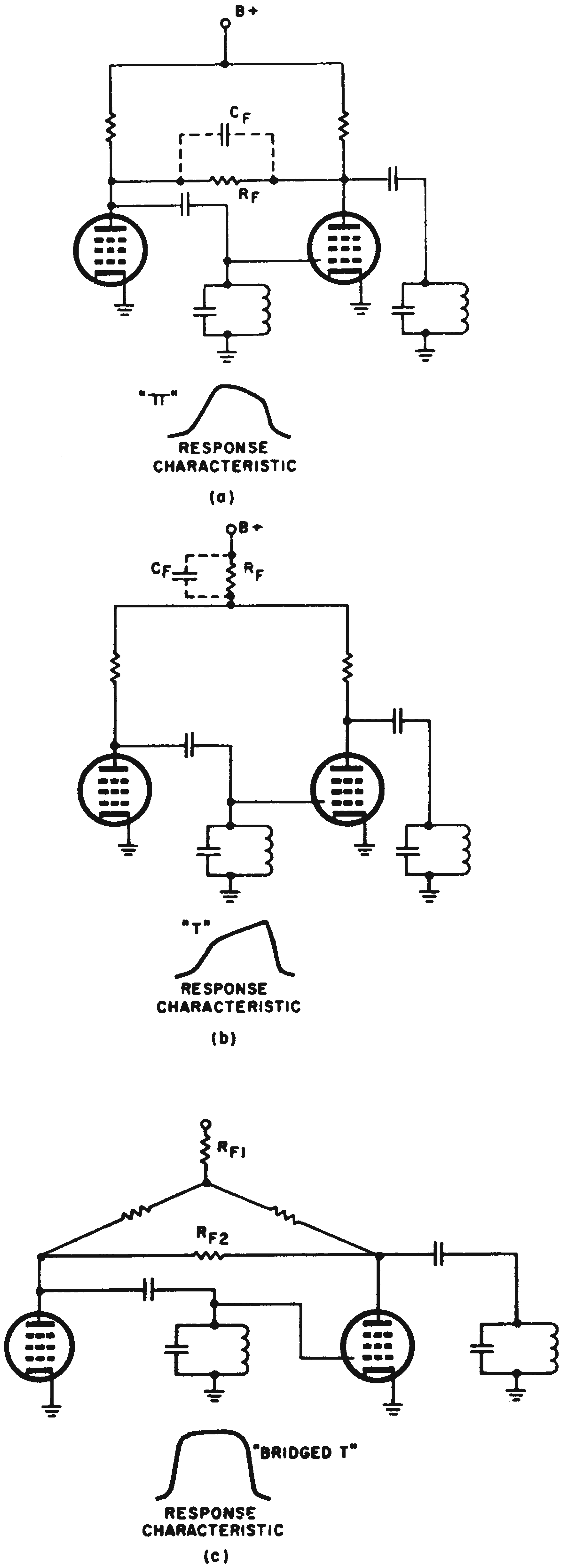

By combining the amplifier-pair π and T coupling configurations of (a) and (b), left, p. 46, the effects of shunt capacity tend to cancel and the response of (c), above, is "maximally flat."

Audio Frequency Amplifier Responds over 10-Cps Bandwidth

Many applications require a band-pass amplifier in the audio-frequency range. The circuit shown in Fig. 1 is intended for such an application.

Transistors Q_1 and Q_2 are connected in the compound (or Darlington) connection. The output current is the sum of the collector currents of the two transistors. By using a bridged-T network in the negative-voltage feedback loop between collector and base of Q_2, the required bandwidth can be ascertained. It is known that the null frequency ω_0 of the bridged-T network is:

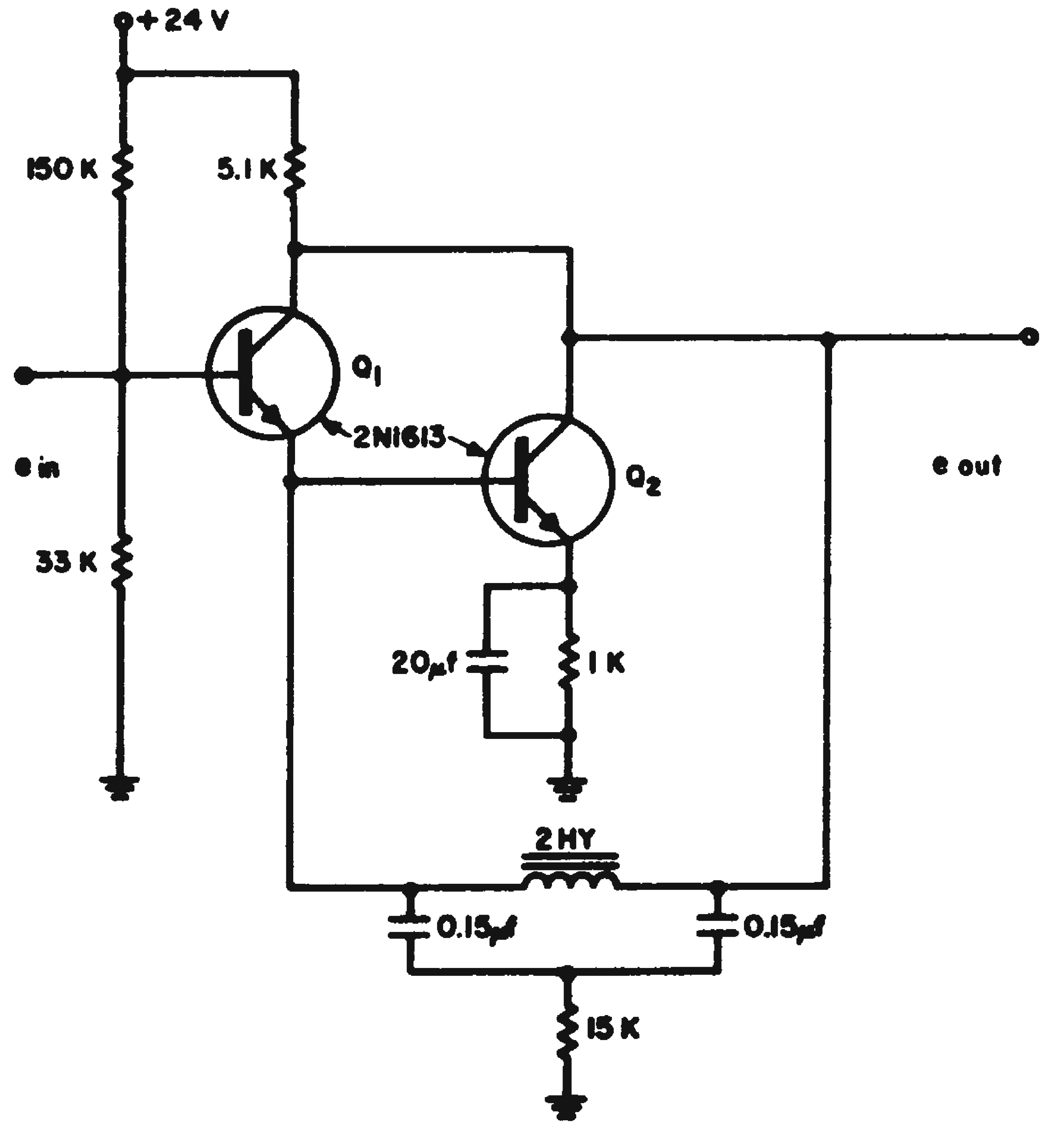

Fig. 1. Darlington circuit combined with bridged-T has 10-cps bandwidth at 400 cps.

$$\omega_0 = \frac{2RC}{Q}, \omega_0 = \sqrt{\frac{2}{LC}}$$

The fundamental relationship between the gain A of the amplifier with a feedback coefficient of β is

$$A = \frac{\alpha}{1 - \alpha\beta}$$

Consequently feedback occurs at all frequencies except at ω_0 where $\beta = 0$. Thus the circuit has a gain of α at ω_0.

The input impedance of the amplifier is very high, for a frequency of 400 cps and a bandwidth of 10 cps. The amplification is over 30 db over a temperature range of -20 to $+85$ C.

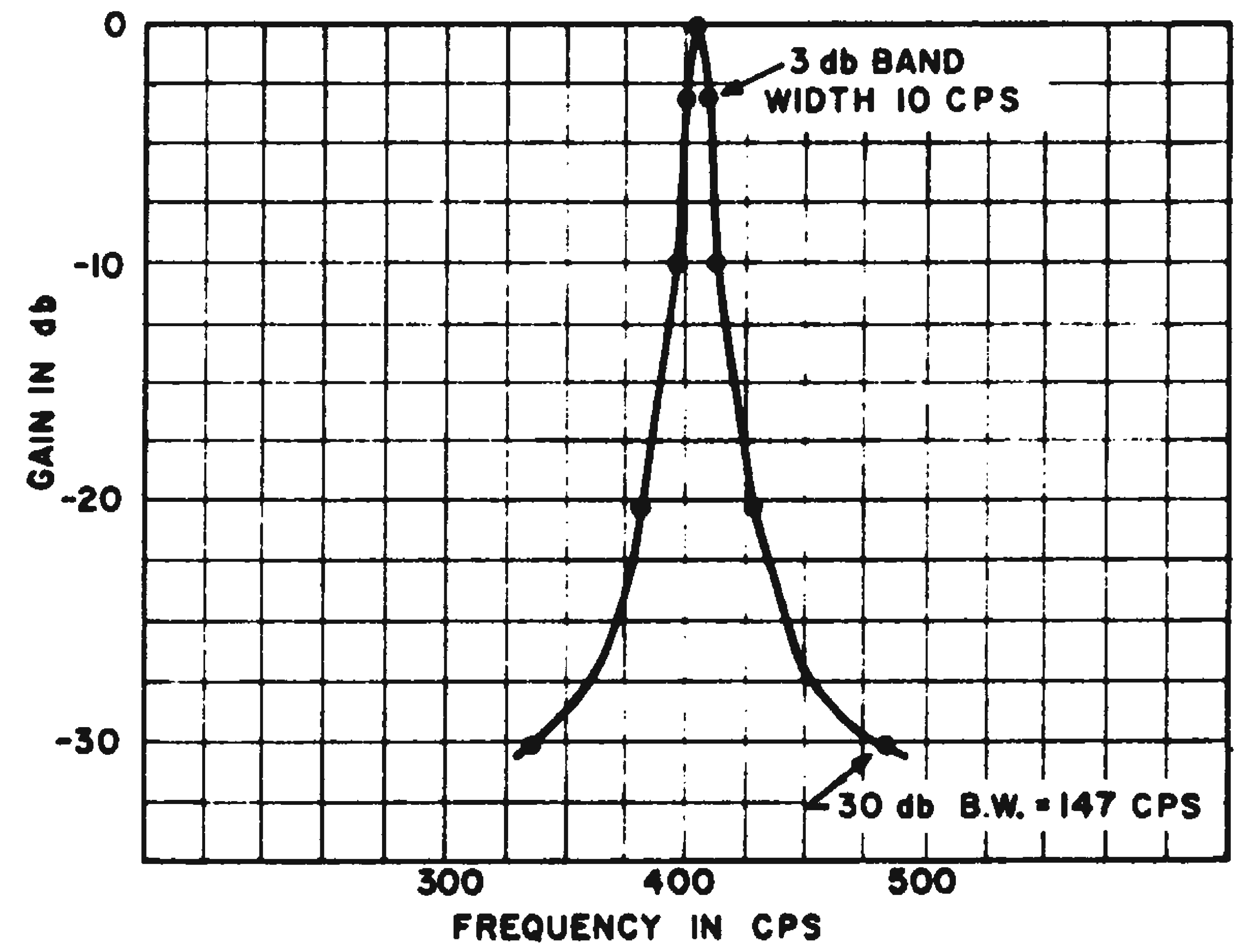

Fig. 2. Characteristic curve for band-pass amplifier has 10-cps bandwidth at 3-db point.

Paul Fung, electrical engineer, Westrex Co., Div. of Litton Systems Inc., New York, N. Y.

Single-Ended Amplifier Can Reject Common-Mode Signals

An amplifier able to reject common mode signals was needed in an application where only single-ended non-isolated amplifiers were available. The amplifier input was to be fed by grounded thermocouples.

Using a dpdt chopper and two capacitors the circuit shown in the figure was designed to provide the common mode rejection. Also, it was able to isolate completely the thermocouple from the amplifier.

Capacitor C_1 charges up across the signal source, and discharges into the amplifier. Capacitor C_2 provides the desired filtering. The input impedance seen by the signal source was not materially affected by the insertion of this device.

Frequency response is much improved by using two dpdt choppers 180 deg out of phase, so that one capacitor is constantly charging across the source, and the other is constantly discharging into the amplifier. In this case, filter capacitor C_2 serves to remove the switching transients. The greater the ratio between the source impedance and the amplifier input impedance, the greater will be the frequency response capability of the unit.

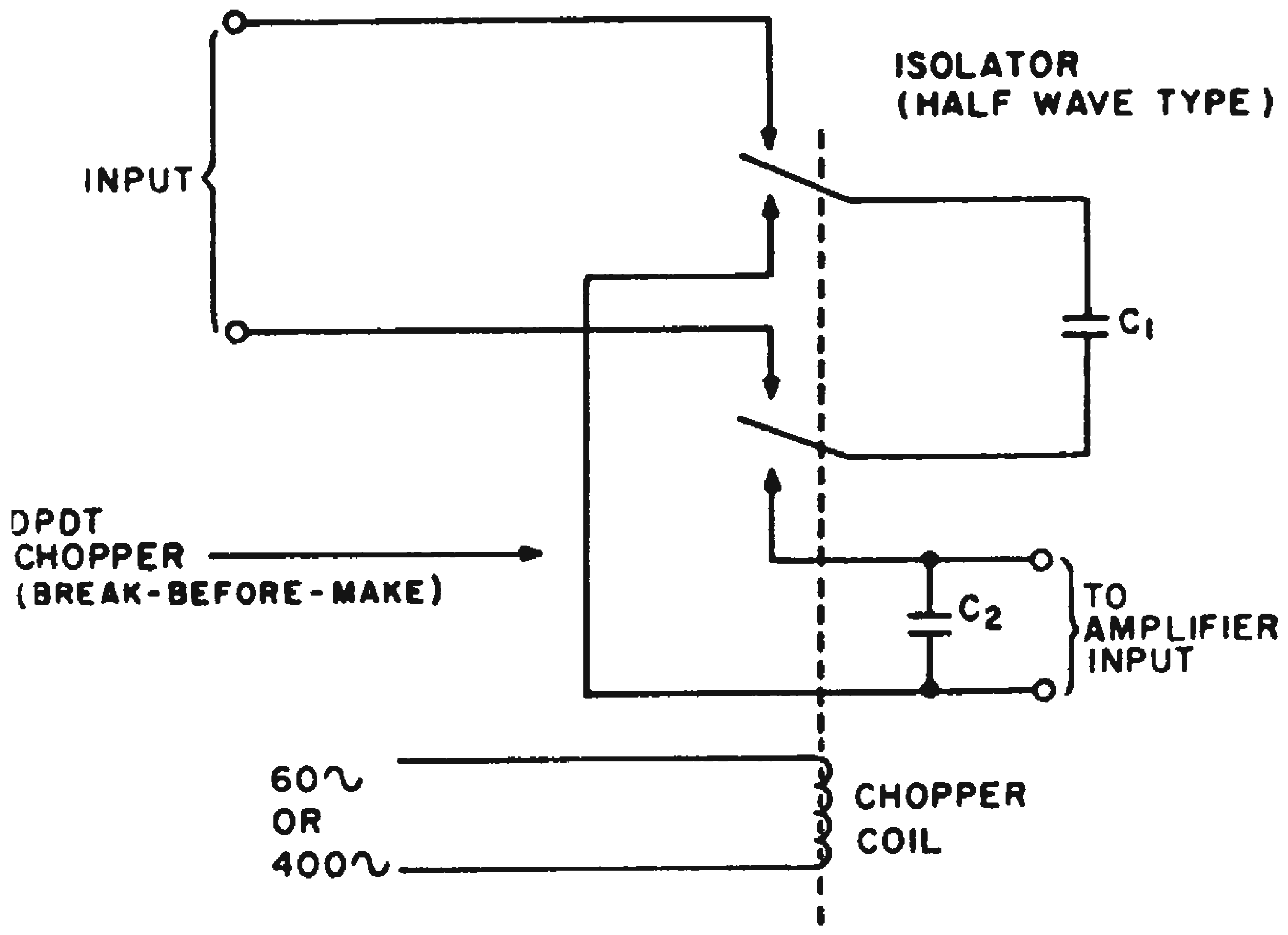

Combination of dpdt choppers and two capacitors allows single-ended input amplifier to reject common-mode signals.

Joseph V. Patterson, senior engineer, The Martin Co., Denver, Colo.

Positive, Negative Feedback Combine to Reduce Noise

Negative feedback does not reduce collector noise because both signal and noise are decreased proportionately. Positive emitter feedback may be helpful but results in signal instability.

The circuit in Fig. 1 combines positive emitter feedback with negative collector feedback in equal proportions. Consequently, the signal amplification is unchanged, but the collector noise is reduced by

$$\beta\left(\frac{N_{cf}}{N_b}\right)$$

where β = forward current transfer ratio, N_{cf} = number of turns on collector feedback winding, and N_b = number of turns on the base winding. N_{ef} in Fig. 1 represents the number of turns on the emitter feedback winding.

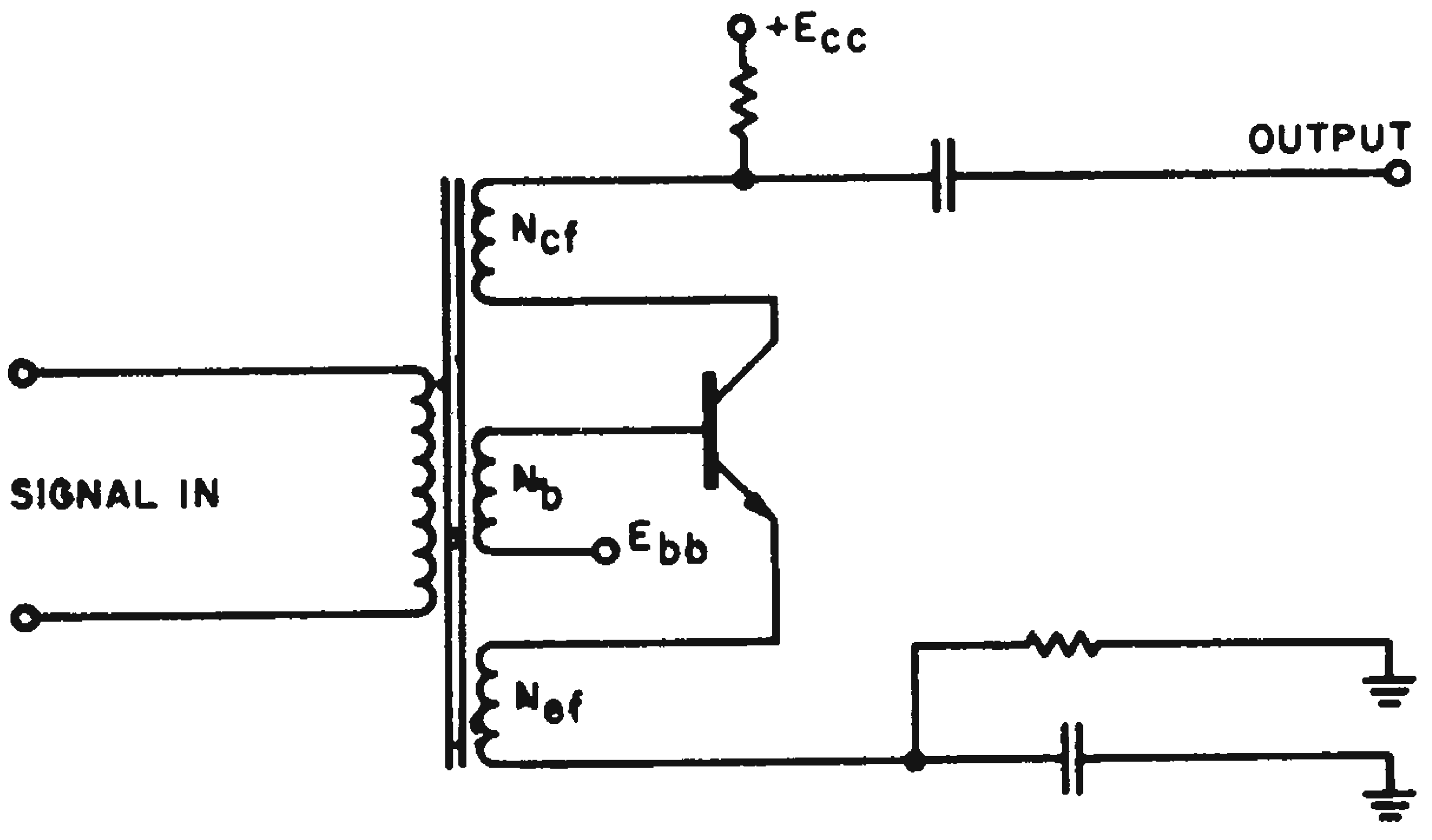

Positive emitter feedback and negative collector feedback combined reduces noise figure while retaining good signal amplification.

In this circuit, there is no need to isolate the dc component of the feedback currents because their effects in the transformer cancel.

Kermit Norris, technician, General Dynamics, Pomona, Calif.

Linear Modulation Of Transistor Power Amplifiers

Separate modulation of the collectors of both the driver and the final of am transistor power amplifiers has been recommended as the only way to obtain 100 per cent modulation without excessive distortion.

The approach described here yields highly satisfactory results with only the final stage modulated. The basis of the system is simultaneous modulation of both the collector and emitter by application of audio signals that are 180 deg out of phase. The base drive to the final is not varied. As the result, demodulated output of a transmitter using this system has a characteristic distortion-free, "punchy" quality, which greatly extends the range of operation by comparison with simple collector modulation. The circuit of a typical class C final is shown in the diagram.

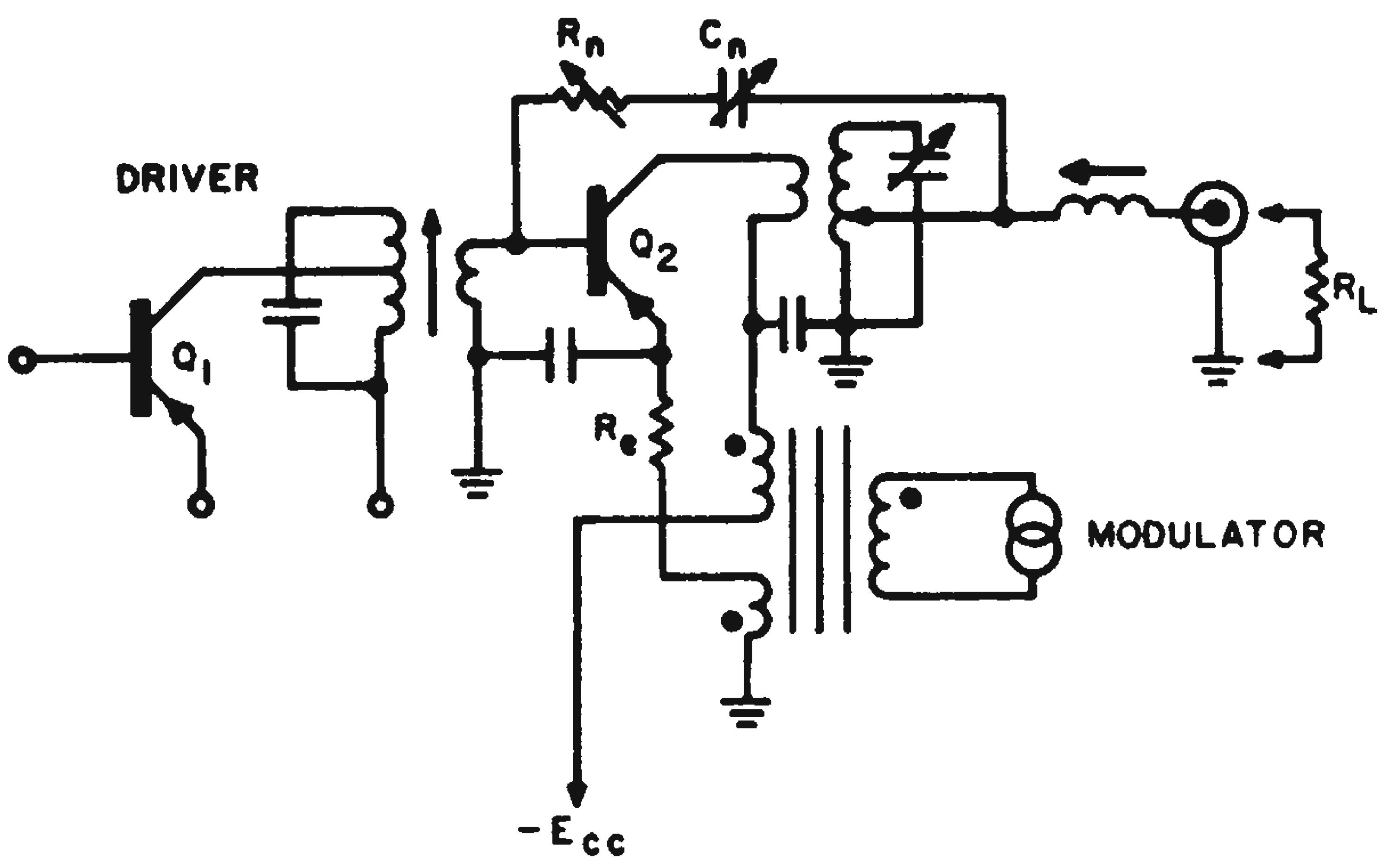

High level modulation of transmitter final is obtained by applying modulation to both emitter and collector.

When modulation is applied in series with the collector supply of a class-C transistor final, the height of the collector-current pulses varies within the transistor limits. If a lower amplitude of modulation, shifted by 180 deg, is simultaneously fed in series with the emitter return, the transistor operating point will be moved along the h_{FE} curve and the power content of the collector current pulses will be greatly increased on modulating wave crests.

Since driver loading by the final decreases during troughs of the modulating waveform, the drive tends to rise just enough to prevent downward carrier modulation on large "negative" modulation peaks.

Oscilloscope inspection of the driver waveform shows no appreciable variation at any normal level of modulation.

It was found, pragmatically, that overcoupling between driver and final must be avoided, or the final will depart from true class-C operation with consequent inefficiency and distortion.

The value of R_e is arrived at by experiment. The emitter resistor is varied while the final modulated output waveform is observed on an oscilloscope. When a perfect trapezoid is obtained at maximum modulated rf output, the value of R_e may be permanently set, using a fixed 10 per cent tolerance resistor.

Although transistor parameter spreads vary considerably, this system is extremely tolerant, hence economically feasable for use on the production line for applications with transistorized radio-telephone equipments.

In practice, we found it necessary, due to the very low output impedance of transistors operated at low values of E_{cc}, to link-couple the transistor to the tank coil. We thus were able to preserve a good operating Q of between 30 to 45. A brass-slug tuned inductor in series with the output line is used to set fine loading of the final tank. A dust core proved undesirable due to hysterisis heating and losses.

Although servicable operation of the transmitter is entirely possible without the final being neutralized, an extra 2-3-db gain may be obtained by use of a neutralizing network. Such a network also tends to improve over-all performance.

Neutralization must be adjusted while the final is modulated 100 per cent by a 1-Kc sine wave and output is monitored by a cathode-ray oscilloscope connected directly across the output terminals with the dummy load. A perfectly clean trapezoid is indication of correct operation of the final.

Design of a transmitter final, using this modulation system, closely follows vacuum-tube practice except for impedance differances. The modulation transformer impedances are determined in the usual vacuum-tube fashion.

It is possible to use this same system with grounded-base finals if the designer allows for varying loading on the driver due to the modulation's effect on the final transistors' emitter.

Leonard E. Geisler, senior applications engineer, Apollo Industries, Ltd., Meguro, Tokyo.

Modified Emitter Follower Has Very Low Output Impedance

Low output impedances often are obtained from a transistor amplifier by using an emitter-follower output stage. For very low impedances, two emitter followers in cascode may be used. But the output impedance of any emitter follower is limited by the properties of the transistors. For example, with the much-used 2N706, the output impedance will not go below about 3 ohms with double or even triple emitter followers.

With the circuit shown, however, we were able to overcome this limitation and operate with a measured output impedance of less than 0.1 ohm.

Transistor T_1 operates as an ordinary emitter follower; T_2 "helps" T_1 by supplying extra current. Very low output impedance is possible because the main current path, T_2, and the feedback sensing path, T_1, are separated, just as in a four-terminal resistor. The main load current is supplied by the collector of T_2. T_1 senses the difference between input and output voltage and regulates T_2 accordingly.

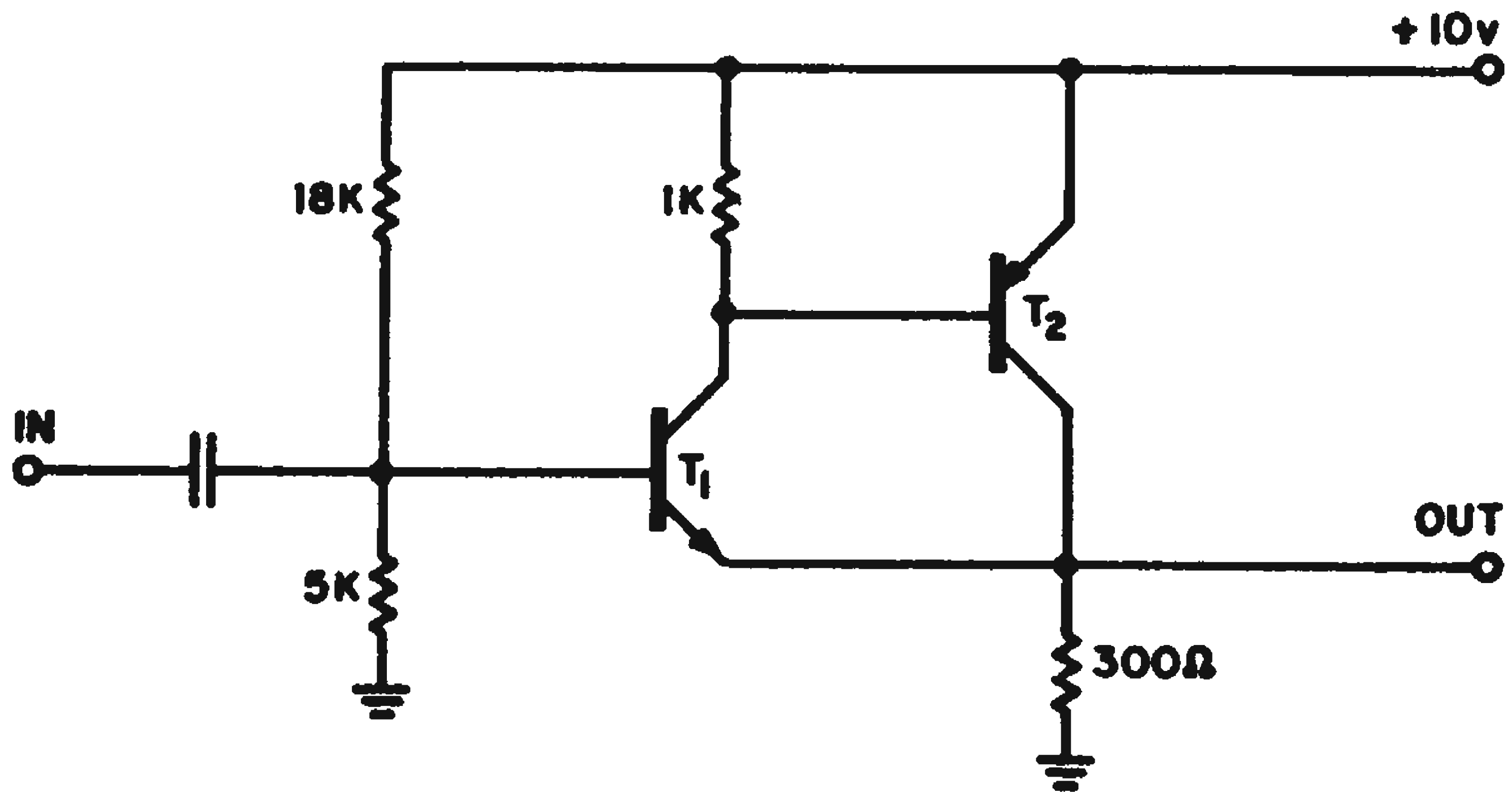

Output impedances as low as 0.1 ohm are possible with what, basically, is an emitter-follower circuit.

The 0.1-ohm output impedance was measured with 2N706 and 2N726 transistors. A small capacitor sometimes is needed across the 1-K resistor to prevent oscillations.

John K. Dixon, electrical engineer, Bendix Research Laboratories, Southfield, Mich.

Desk Calculator Evaluates Standard Polynomial Expression

By re-arranging the terms of the polynomial $a_nx^n + a_{n-1}x^{n+1} + a_{n-2}x^{n-2} \ldots\ldots + a_o$, a desk calculator can be used to evaluate the expression for any given value of the variable $x = x_o$. The procedure can also be applied to binary-to-decimal number conversion.

The polynomial is rearranged as follows: Multiply x_o by the first coefficient a_n and add the next coefficient a_{n-1} to the product. Continue this procedure, developing the series of terms $a_nx_o + a_{n-1}$; $a_nx_o^2\ a_{n-1}x_o + a_{n-2}$; $a_nx_o^3 + a_{n-1}x_o^2 + \ldots\ldots$; etc., until the point is reached where the constant term is added. This result is the evaluated polynomial.

This method is a "natural" for use on a desk calculator. It is also the basis for the "double-dabble" system of translating binary to decimal numbers. Thus, if x_o is 2 and the coefficients a_i are the binary digits 1 and 0, we have a simple desk calculator procedure for binary to decimal conversion.

Jesse Roth, Project Engineer, Kearfott Co., Clifton, N. J.

Log-Log Slide Rule Converts Voltage, Power Ratios Directly to Db

Decibels may be read directly on a log-log slide rule without any manipulations other than the initial alignment. It is necessary only to know whether you have voltage or power ratios.

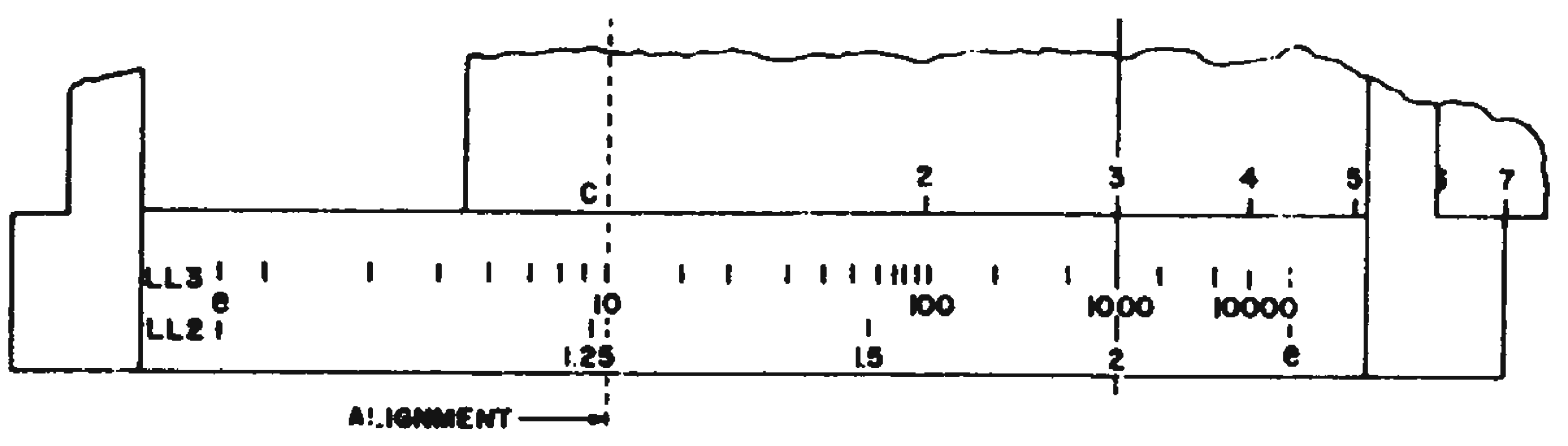

Fig. 1. For Power Ratios: — *1* on C scale is aligned with *10* on LL3 scale.

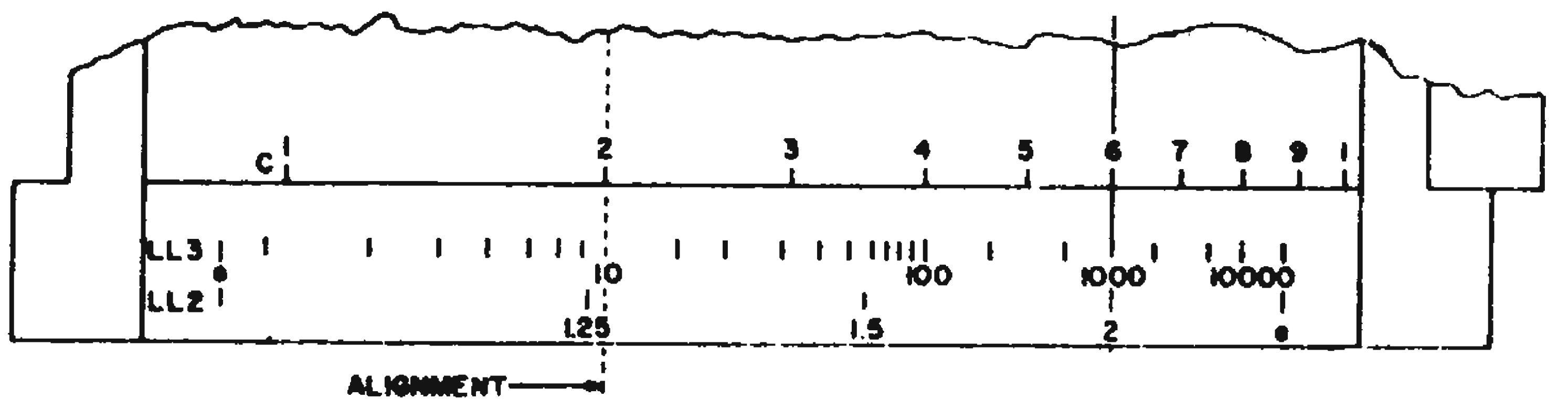

Fig. 2. For Voltage Ratios: — *2* on C scale is aligned with *10* on LL3 scale.

For voltage ratios, the *2* on the C scale is aligned with the *10* on the LL3 scale, Fig. 1. The voltage ratio is located on the proper LL scale. Then, the corresponding value in db is read on the C scale. If the voltage ratio is located on the LL3 scale, the value in db on the C scale is multiplied by *10*; on the LL2 scale, the C scale multiplier is *1*; on the LL1 scale, the C scale multiplier is 0.1.

For power ratios, the *1* on the C scale is aligned with the *10* on the LL2 scale, Fig. 2. The LL scale multipliers are the same as with voltage ratios. In the same manner, for inverse ratios the LL03, LL02, and LL01 scales may be used.

R. Wayne Crawford, Research Associate, Ohio State University, Columbus, Ohio.

Simplified Conversion Eliminates Slide Rule Step

The decibel conversion method outlined in "Log-Log Slide Rule Converts Voltage, Power Ratios Directly to Db" (*ED*, May 11, 1960, p 231 and July 20, 1960 p 149) is more difficult to use and remember than is necessary. The difficulty lies in the assumption that the voltage or power ratio has already been determined. Actually this would require an extra setting of the slide rule. This decimal ratio must then be remembered for use after the slide rule has been set as recommended in the article. A much simpler method is available.

If the log scale is on the stationary part of the rule, power ratios are determined by performing the ratio division on the *C* and *D* scales. The cursor is then brought to the index of the *C* scale, and the power decibel ratio is read directly off the log scale by moving the decimal point one place to the right.

For voltage ratios, the same procedure is used, except that in addition to moving the decimal point one place to the right on the log scale, the numbers on the log scale are also multiplied by two. This can be done by inspection. With either of these methods, it is only necessary to note whether the original ratio is greater than 10, and by how many decades. A suitable number of 10-db steps for the power ratio or 20-db steps for the voltage ratio is added to the number read on the log scale.

Donald E. Williamson, Williamson Development Co., Inc., West Concord, Mass.

Slide-Rule Converts Angles to Radians Quickly

Anyone with a sine-tangent scale on his slide-rule can quickly convert angles between degrees and radians without multiplying by $\pi/180$ or its inverse.

Simply set the sine-tangent (ST) scale directly over the D scale. Then set the index on the angle in degrees on the ST scale, disregarding the decimal point. The angle in radians is read under the index on the D scale. Its decimal point is determined by inspection.

The ST scale gives those angles for which the sine equals the tangent, to the accuracy of the slide rule (that is, angles less than 5.73° or 0.1 radian). For these angles, both the sine and the tangent are equal to the angle in radians, to the same accuracy. Thus, sine $2° = \tan 2° = 0.0349 = 2°$ in radians. For angles between 5.73°, and 57.3°, the number of radians on the D scale lies between 0.1 and 1.0.

For example, let us express 20° in radians. First set the index over 2° on the ST scale. Read 349 on the D scale. The answer is 0.349 radians. Similarly $200° = 3.49$ radians, etc. By the reverse of the above procedure, 0.5 radians on the D scale yields 2.86^+ on the ST scale. The angle is then 28.6^+ radians.

Solomon L. Linder, Technical Staff, Bell Telephone Laboratories, Whippany, N. J.

Straight Line Graph Yields Logs to Base 2

Calculation of information amounts and rates often involve finding logarithms to the base 2. Since readily available tables are generally sketchy, to obtain $Y = \log_2 X$ one commonly uses the relation $Y = \log_{10} X \cdot \log_2 10$, finding Y by looking up the common log of X and multiplying it by 3.3219. It is accurate enough and a lot easier to find the logarithms graphically.

All that is necessary is to draw a line on a sheet of semi-log paper. Along the logarithmic axis of the paper, mark the range of X of interest. Along the linear axis mark off the corresponding range of Y. Draw the line by plotting two convenient points, such as ($X = 1$, $Y = 0$) and ($X = 8$, $Y = 3$). To find convenient points, just remember that $Y = \log_2 X$ is equivalent to $X = 2^Y$.

Jesse Roth, Proj. Engineer, Kearfott Div., General Precision Lab., Little Falls, N.J.

Short-Cut Squares Numbers Rapidly on Sight

Here's how any three digit number ending in 25, 50 or 75 may be easily and accurately squared on sight. The correct answer can be written directly to the sixth significant figure.

To square any two-digit number ending in 5, multiply the next lower whole number digit by the next higher whole number digit. Write down the product and, following it, write down 25. Determine the placement of the decimal point by the usual method.

Examples: To square 7.5, multiply 7 times 8 and write down 5625. The answer is 56.25.

To square 950, multiply 9 times 10 and write down 9025. The answer is 902,500.

To square any three digit number ending in 25 or 75, multiply the next lower half-number digits by the next higher half-number digits. Write down the product and, following it, write down 625.

Examples: To square 2.75, multiply 25 times 3 and write down 75625. The answer is 7.5625.

To square 0.825, multiply 8 times 85 and write down 680625. The answer is 0.680625.

This process can be extended to straight multiplication of similar numbers having different magnitudes.

Examples: To find the product of 125 and 0.125, multiply 1 times 15 and write down 15625. The answer is 15.625.

To find the product of 85 and 850, multiply 8 times 9 and write down 7225. The answer is 72,250.

Leo A. Skoubo, Avionics E. E., AiResearch Manufacturing Co., Los Angeles, Calif.

Straight-Line Representations Simplify Data Comparisons

A recurring problem in design work is the comparison of experimental performance with theoretical prediction. In many cases it is possible to greatly simplify this process by

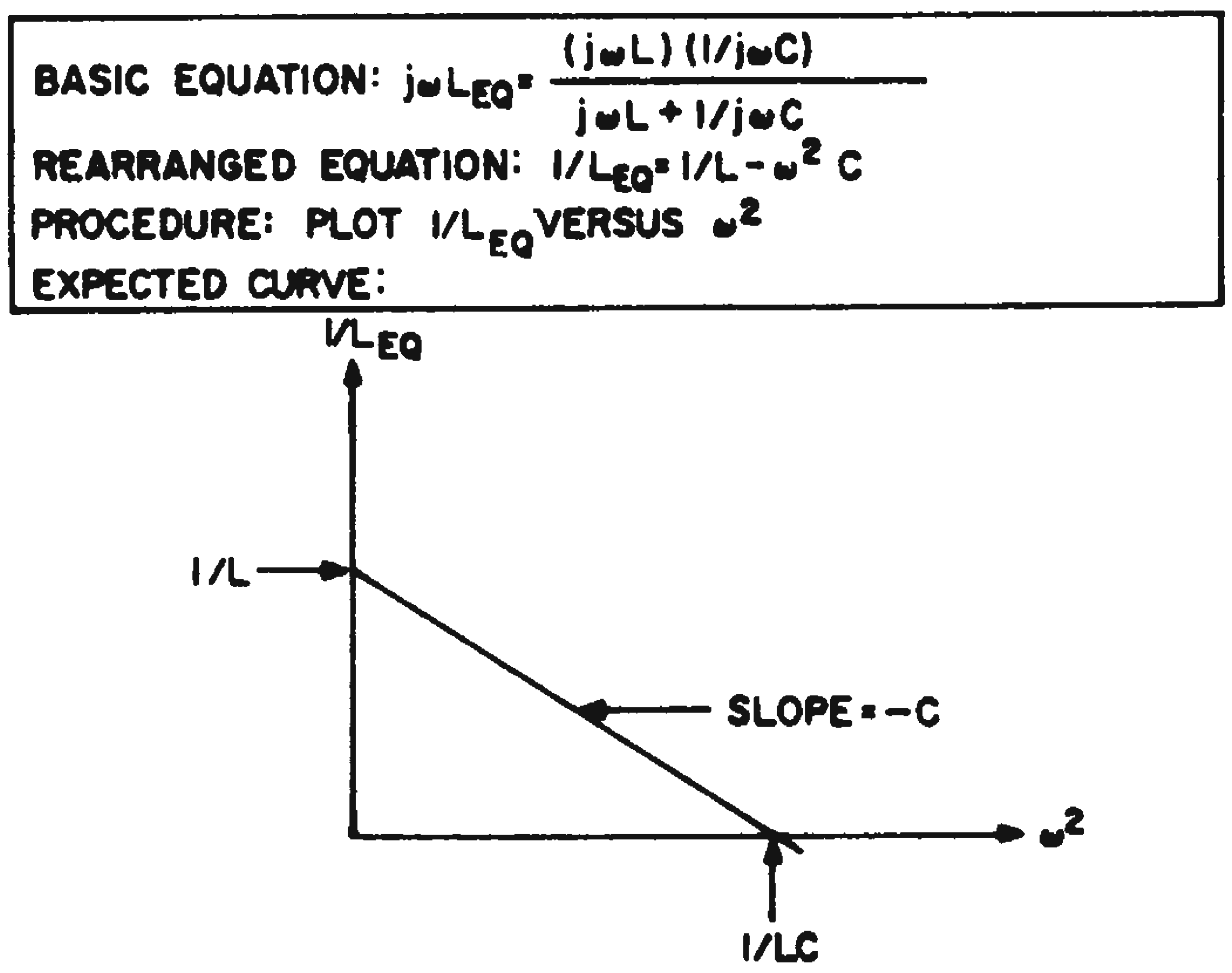

Fig. 1. Equivalent inductance of an inductor with stray shunt capacitance.

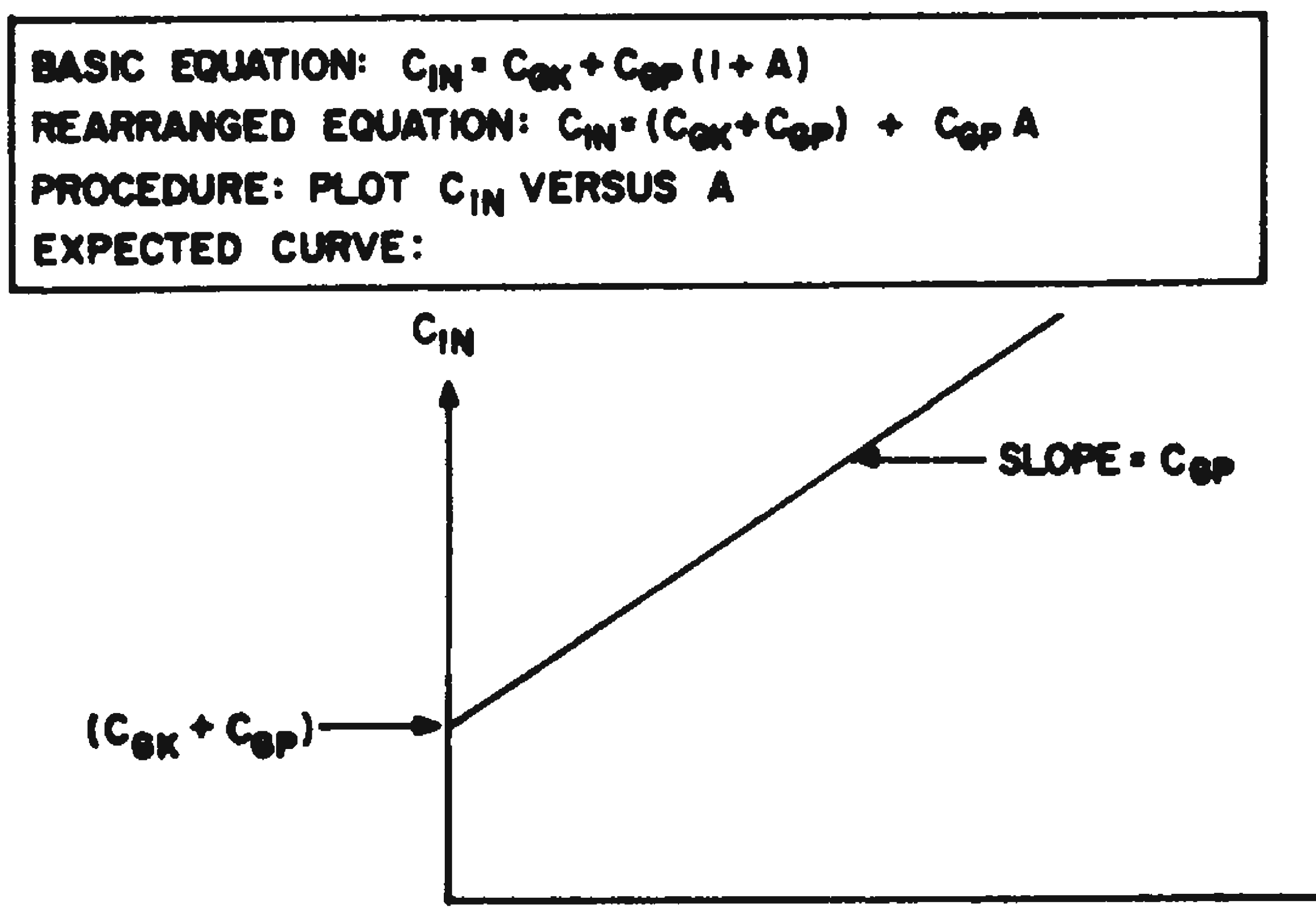

Fig. 2. Input capacitance of a grounded-cathode amplifier stage.

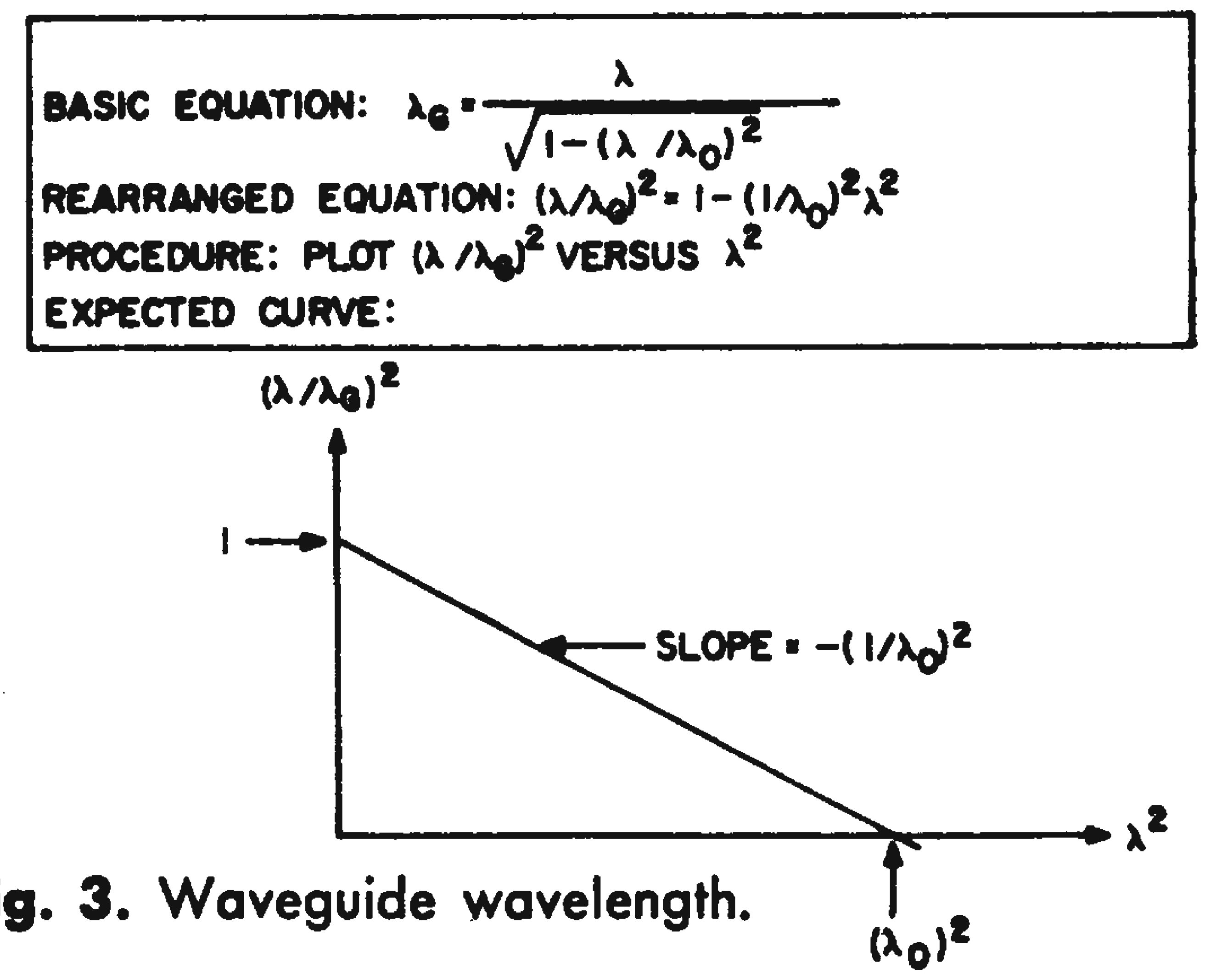

Fig. 3. Waveguide wavelength.

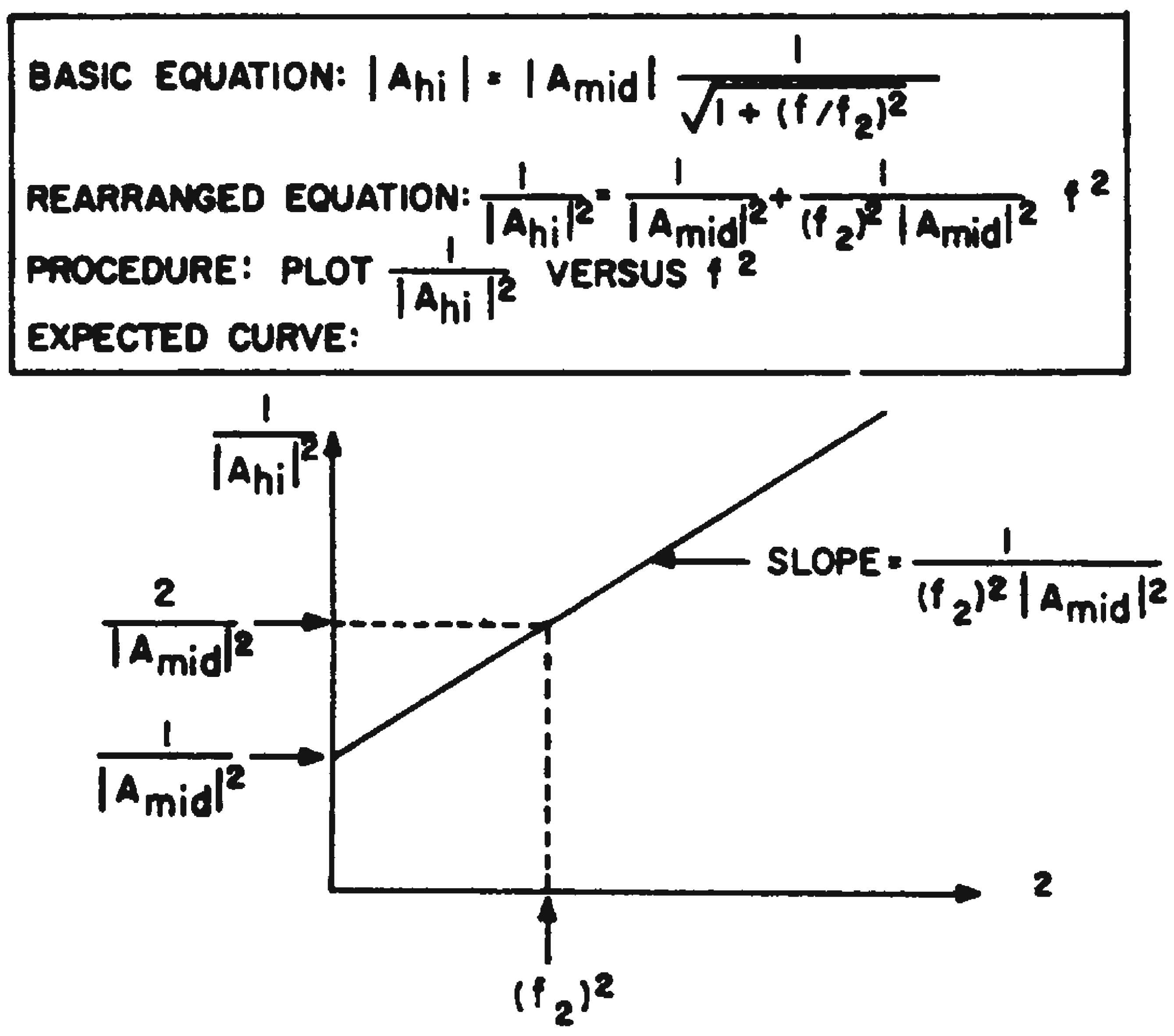

Fig. 4. High-frequency response of an RC-coupled amplifier.

plotting the experimental data so that the expected theoretical curve is a straight line.

Several examples are shown.

These examples illustrate the general procedure that can be applied to a great number of practical problems.

Odis P. McDuff, project director, Electrical Engineering Dept., University of Alabama, University, Ala.

Staggered Columns Identify Printed Data Easily

A method of recording a maximum of data on an 11-column paper tape printer, or the like, while retaining separation and easy identification of data channels is illustrated below. By switching the data channels appropriately on alternate prints and by sharing certain columnar positions, a group of channels can be printed in an array that enables individual channels to be identified by relative position. The trend of each channel can also be readily followed.

In addition, a larger number of significant digits is available than might ordinarily be. In the example shown, 5 data channels are accommodated, with a total of 17 significant digits.

```
468 654 718
  5731 1231
469 649 679
  5742 1016
459 658 725
  5732 0991
399 650 800
  5786 0980
387 700 701
  5792 1098
357 681 779
  5700 1187
348 705 829
  5699 1232
```

K. C. Herrick, Project Engineer, Philco Corp., Western Development Laboratories, Palo Alto, Calif.

Power Gain Plot Can Be Made Directly From Measurements

When plotting the large current gain of power transistors the plot can be made rather quickly by eliminating the division step.

Current gain is given by $H_{FE} = I_c/I_b$. The graph paper is used as shown in the figure, with base current values laid out beforehand on the graph. The intersection of the measured base current line and the collector current abscissa yields a correct point on the H_{FE} vs I_c curve.

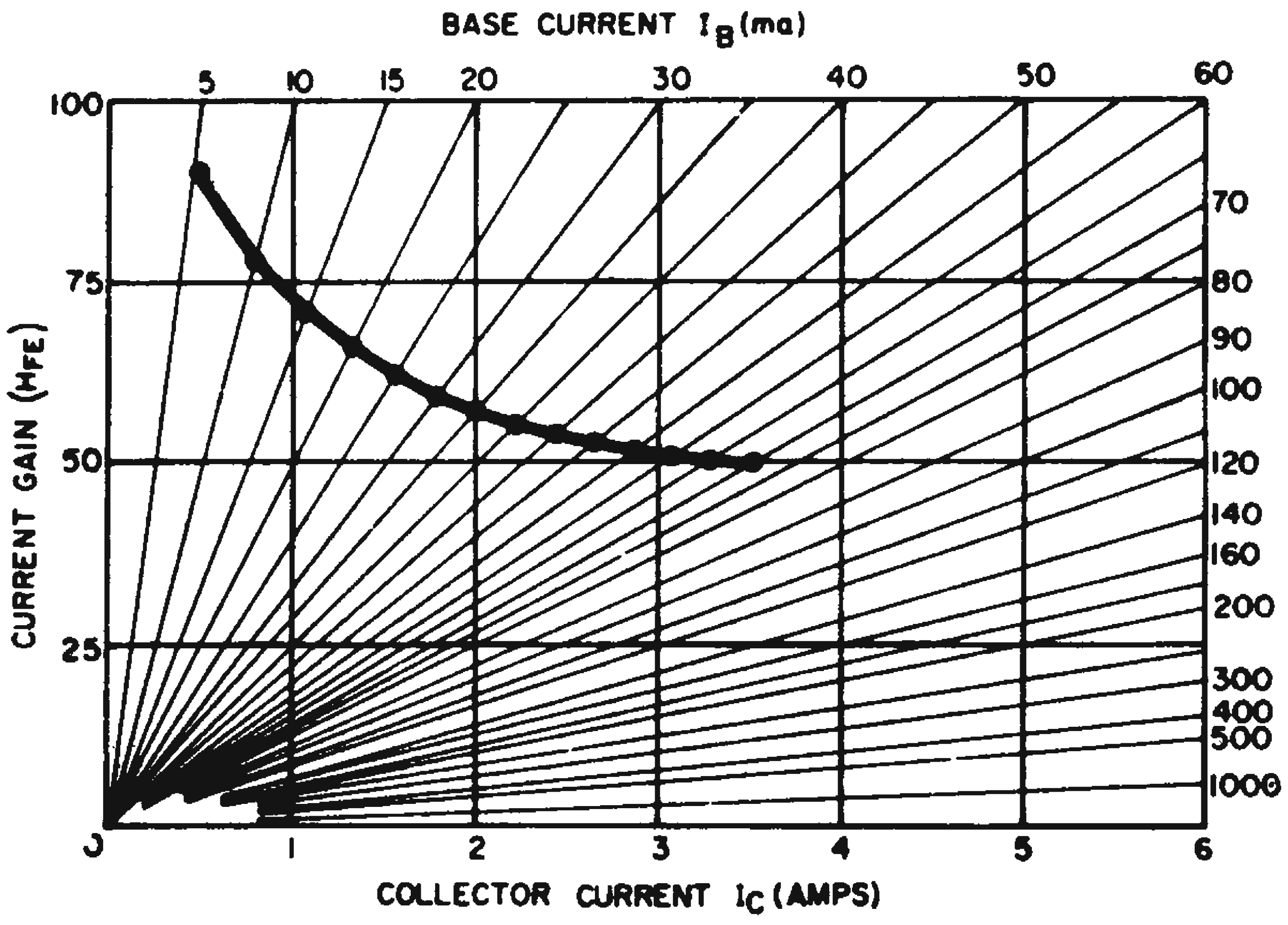

Current gain H_{FE} is plotted directly from I_b and I_c measurements by laying out base current "guidelines" beforehand.

John T. Lamb, Research Engineer, The Tappan Co., Mansfield, Ohio.

Modified Formula Helps Calculate Q More Accurately

When measuring the Q of large capacitors on a Q-meter it is necessary to use the series method and the formula:

$$Q_x = \frac{Q_1Q_2(C_2 - C_1)}{Q_1C_1 - Q_2C_2} \tag{1}$$

Where: Q_1 is the initial Q reading.

C_1 is the initial capacitance reading.

Q_2 is the reading with the unknown in the circuit.

C_2 is the capacitance reading with the unknown in the circuit.

The C_1Q_1 and C_2Q_2 products are often very large and their difference very small. This results in large errors of the final calculated Q. By making the following operations on the formula, the accuracy of the calculation can be considerably improved.

Working with the denominator only:

$$\Delta Q = Q_1 - Q_2 \tag{2}$$

$$\Delta C = C_2 - C_1$$

$$\begin{aligned} Q_1C_1 - Q_2C_2 &= Q_1C_1 - [(Q_1 - \Delta Q)\cdot(C_1 + \Delta C)] \\ &= Q_1C_1 - (Q_1C_1 - \Delta QC_1 + Q_1\Delta C - \Delta Q\Delta C) \\ &= \Delta Q(C_1 + \Delta C) - Q_1\Delta C \end{aligned}$$

Q_x then becomes:

$$Q_x = \frac{Q_1Q_2\Delta C}{\Delta Q(C_1 + \Delta C) - Q_1\Delta C} \tag{3}$$

The effect of this rearrangement is to remove the large Q_1C_1 product so that the required difference is taken between smaller numbers.

Marvin C. Kerber, Engineer, AVCO Corp. Electronic and Ordnance Div., Cincinnati, Ohio.

Curve Helps Determine Unmatched Transformer Response

The low frequency response of an audio transformer under unmatched conditions can be readily determined from the curve below.

Most audio transformers are rated for frequency response under matched conditions. However they are very often used under unmatched conditions, in applications such as pentode outputs and bridging circuits.

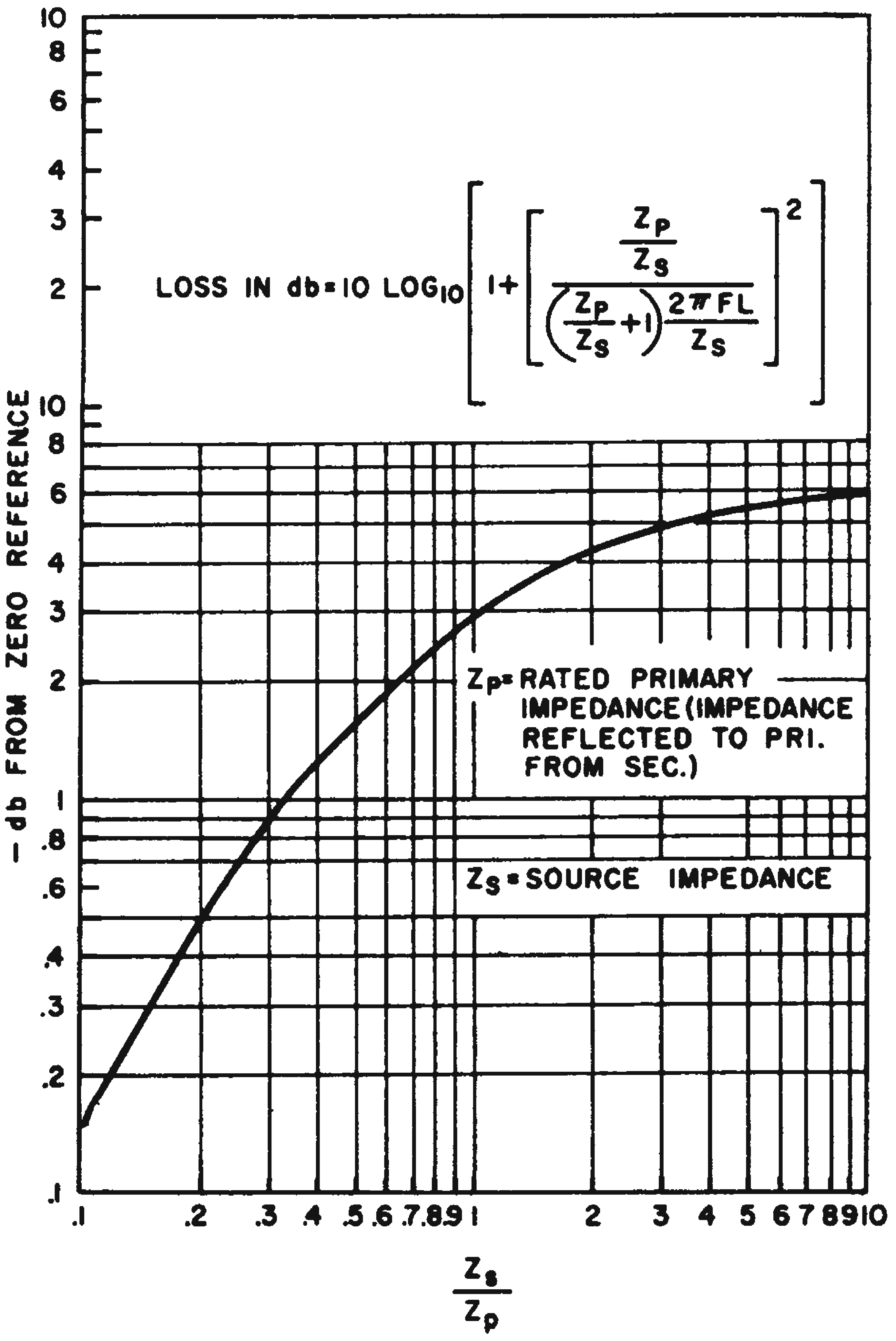

Low end response under unmatched conditions of an audio transformer can be determined from this curve.

The curve shown can be used by the circuit designer to determine the low-end response of a transformer in his particular circuit.

Points on the curve are compared with the —3-db point of a matched transformer $Z_S/Z_P = 1$. The curve is not valid for input transformers connected to open grids.

Troy Burgess, Engineer, Triad Transformer Corp., Venice, Calif.

Eccentric Knob Trimmer Covers 200-Cycle Tuning Range

Calculation of the capacitance required to produce a 200-cycle frequency variation in a VFO trimmer, indicated a maximum capacitance of 0.03 pf. This extremely small cpacitance ruled out a conventional approach. As a result, a novel capacitor was designed. It simply controls the distributed capacitance from an rf potential point of the tuned circuit to ground. The trimmer-capacitor stator, which is at rf potential, is composed of a soldering tab mounted on the variable capacitor and normally used for wiring purposes.

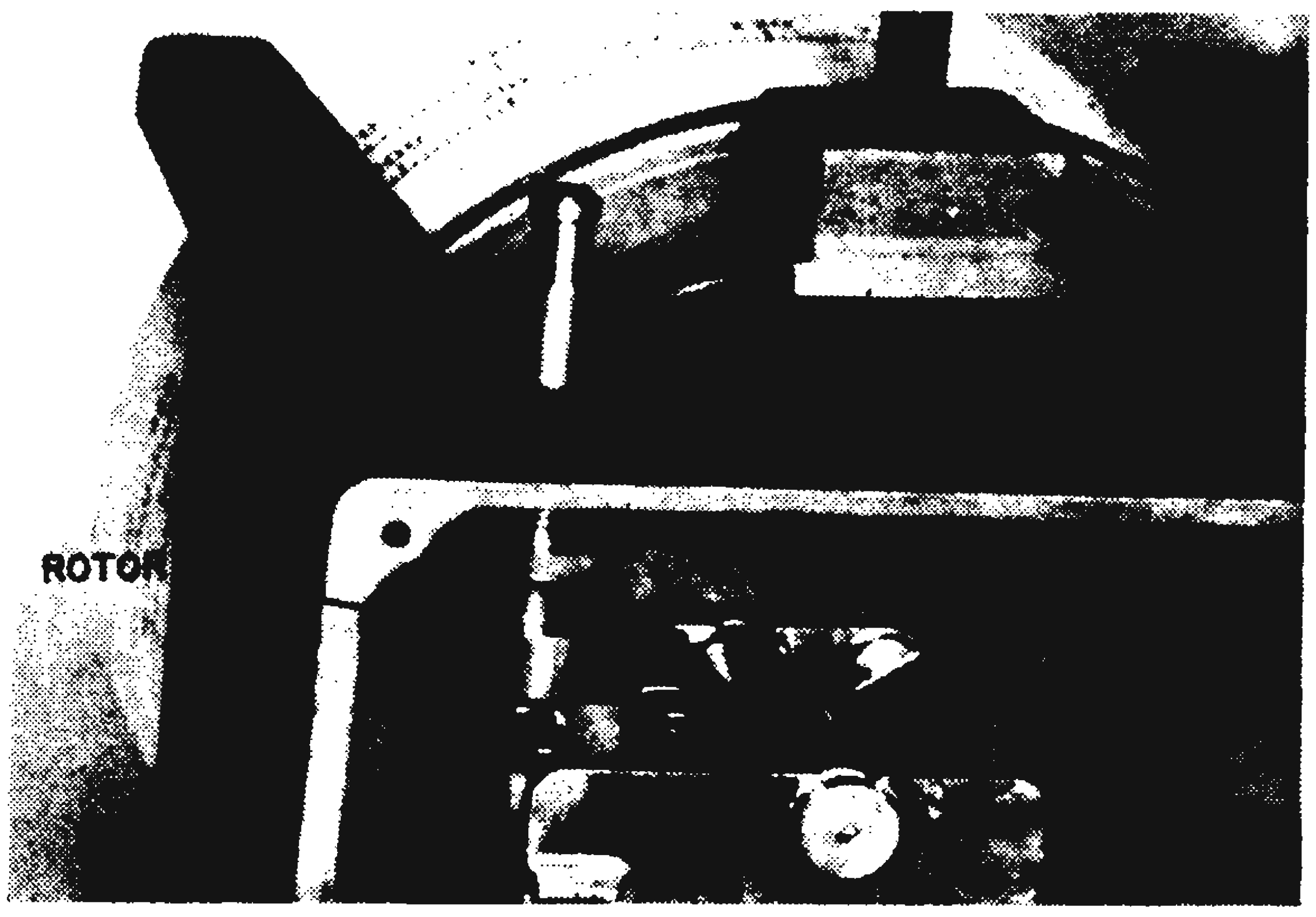

Solder tab on main tuning capacitor serves as stator for trimmer.

The rotor, electrically at ground potential, consists of a manually operated shaft rotating in a panel bushing terminated by a disc. The eccentric attachment of the disc to the shaft changes the rotor-to-stator distance while rotating over a 180 deg arc. By so doing, it varies the capacitance. The rate of capacitance variation is a function of the amount of eccentricity and disc diameter. The capacitance magnitude is determined by the tab area and the portion of the rotor disc edge facing the tab. Small adjustment of capacitance can be made by bending the tab toward or away from the disc. Larger capacitance can be obtained by increasing the tab size and/or using the disc surface instead of the edge as an active element.

Georges M. Cnudde, electrical engineer, Philco Corp., Menlo Park, Calif.

FET Makes High Level Phase-Sensitive Detector

A demodulator that uses field-effect transistors can detect in-phase signals in the millivolt range when they are buried in noise having peak amplitudes several orders of magnitude larger.

Using 200-volt gate-to-drain field-effect transistors (Amelco FG 37) and a 60-volt peak-to-peak square-wave reference voltage, a dc output of 2 mv is measured for a short-circuited input. When the 2 mv are biased out, the signal transfer is linear from 1 millivolt to 150 volts peak input signal.

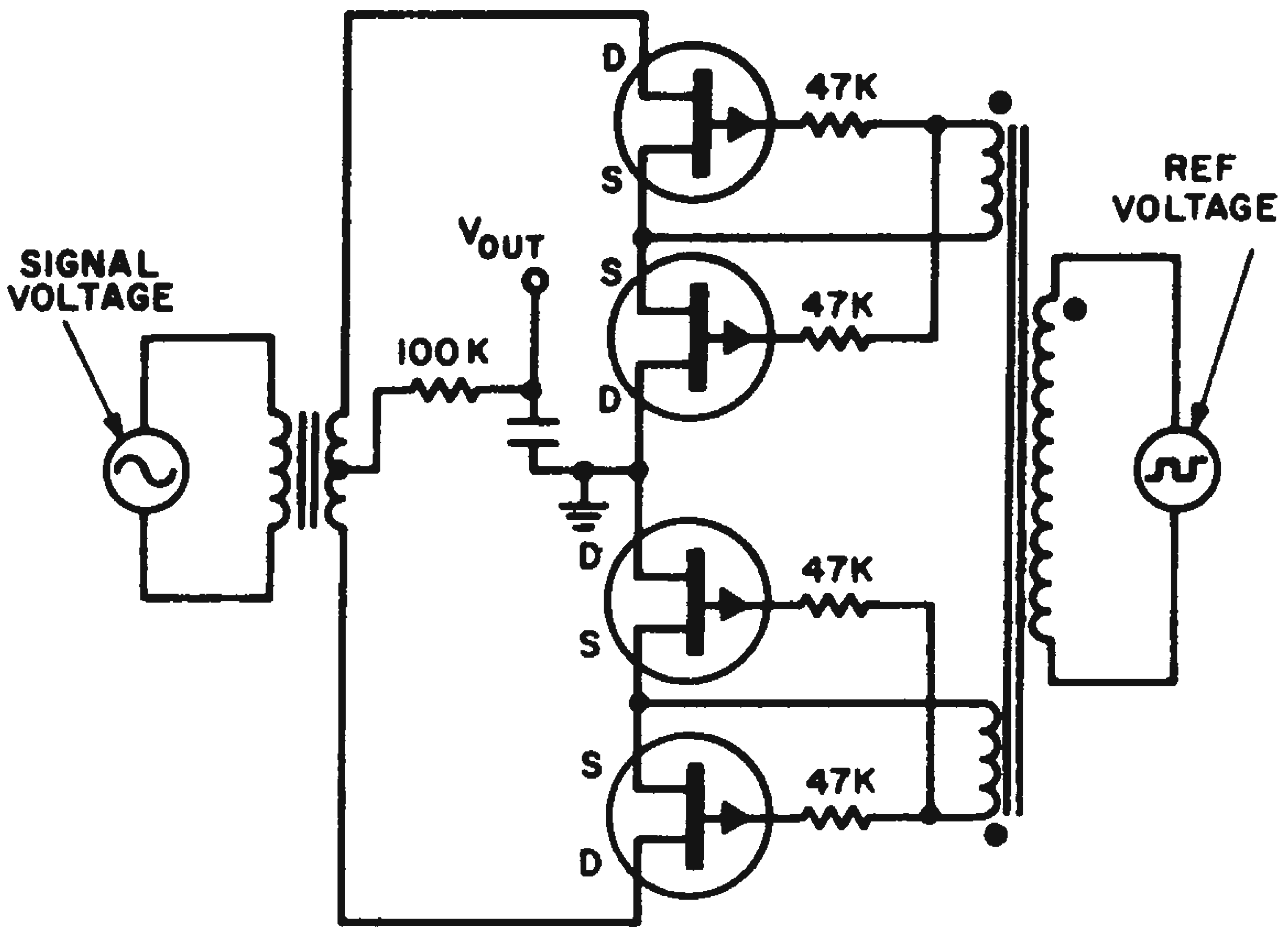

Use of field-effect transistors connected back-to-back enables detection of signal in the presence of high-level noise.

An N-channel field-effect transistor presents a high impedance from source to drain only when the gate is negative and the drain is positive with respect to the source. To ensure that either leg of the signal transformer can be open-circuited independently of the polarity of the signal voltage, it is necessary to connect two transistors back-to-back and to apply the reference gate-to-source voltage simultaneously to both transistors.

In addition to having a long operating lifetime, this detector has one further advantage over mechanical choppers in that it may be operated at frequencies well into the higher audio range with negligible switching time.

W. D. Hindson and T. Nishizaki, scientific officers, Defense Research Telecommunications Establishment, Ottawa, Canada.

Single-Stage AGC Has 40-Db Control Range

Agc circuits of wide dynamic range can be designed by using a field-effect transistor in a simple circuit. The circuit provides minimum coupling of agc control signals into the information channel.

Transistor Q_1 is a conventional device connected as a common-emitter voltage amplifier. Q_2 is a p-channel field-effect device.

If the signal swing at the input to the amplifier is less than 1 volt peak to peak, the field-effect transistor operates as a symmetrical variable resistor. The resistance is dependent upon the gate-to-source voltage, which is controlled by the agc detector. The result is that the degeneration in the emitter of Q_1 is varied to result in gain control of Q_1.

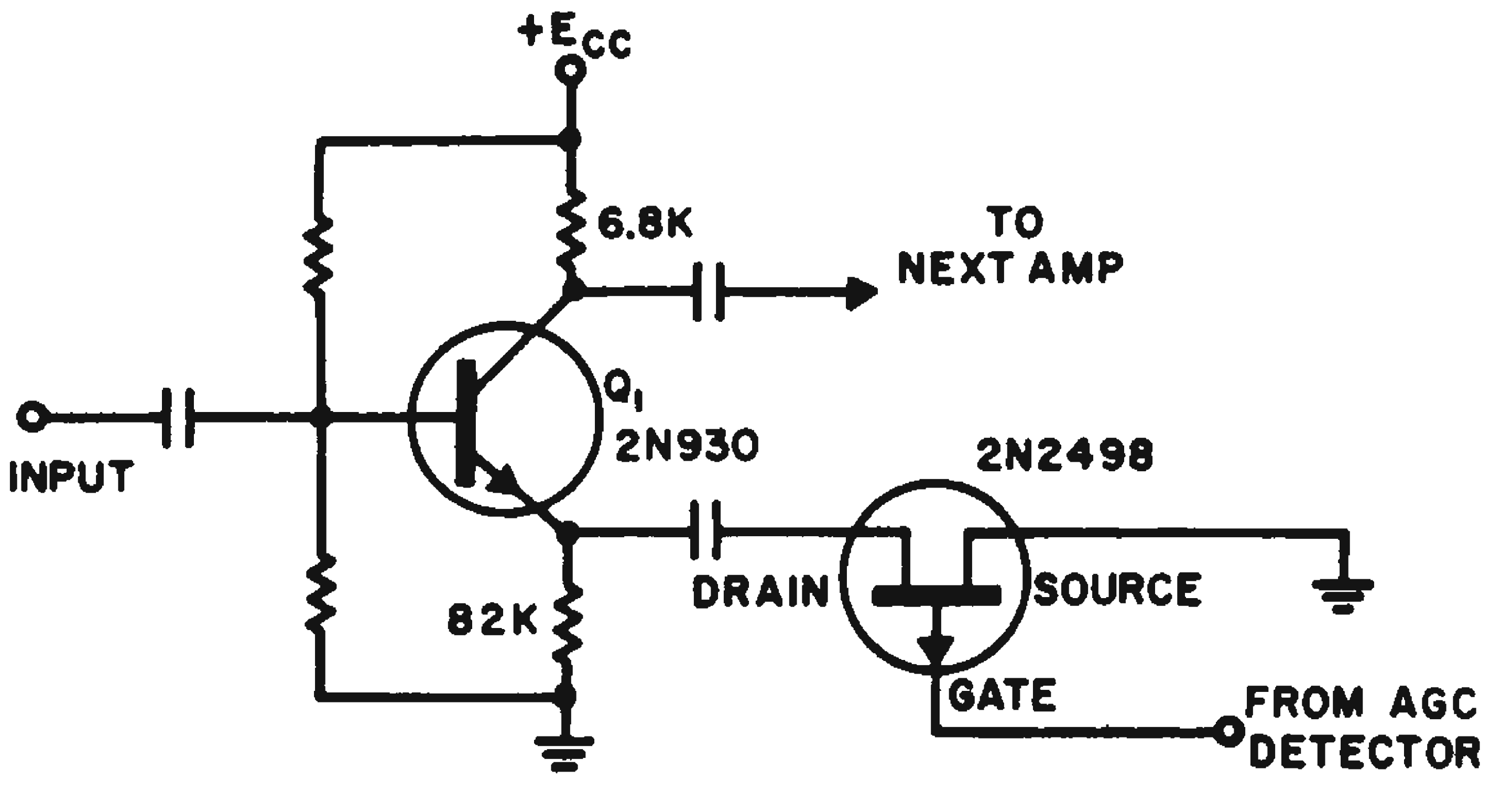

Field-effect transistor acts as variable resistor to provide agc action.

Maximum to minimum gain ratio is about 40 db. This is quite large for a single stage of agc. Coupling of agc signal into the amplifier channel was immeasurably small.

James M. Loe, circuit design engineer, General Electric Co., Philadelphia, Pa.

Transistor Transmitter Has High-Level DSB Modulation

Double sideband modulation offers a means of obtaining greater operating range from transistorized communications transmitters. However, little information exists in the literature as to how this may be done.

The circuit of Fig. 1 shows one practical method, which works extremely well in a 100-mw, 11-meter Citizens Band transceiver.

At first glance, the final circuit seems to be a conventional push-pull output stage. Actually, it is not, since the two bases are fed in parallel, and the collectors are connected in push-pull. The carrier is thus canceled when the emitter resistor has been adjusted to balance the static characteristics of the hf transistors.

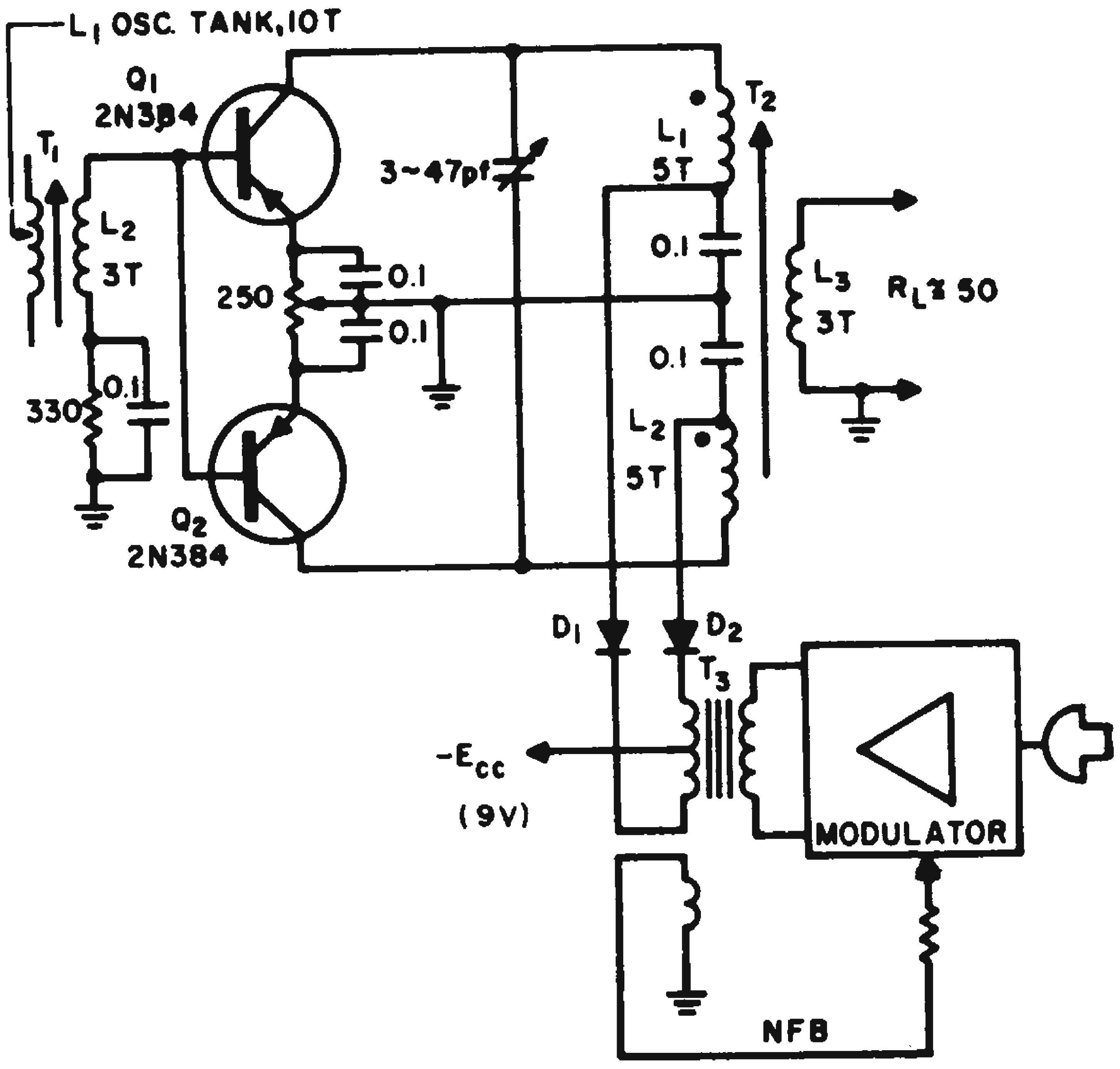

Parallel-fed push-pull output stage suppresses carrier for dsb Citizens Band transmitter.

Modulation applied in push-pull to two transistors generates a dsb signal in which there is no modulation or carrier terms. The two series diodes in the collector leads of the final prevent back emf from puncturing the transistors. They also act as series negative-peak clippers. Heavy negative feedback around the modulator compensates for fluctuating modulator load at various af input levels. Output from the transmitter is free from excessive harmonics or spurious responses.

Neutralization of the final is automatic. The collector-to-base capacitance of each "opposite" transistor acts as a neutralizing capacitor. Normal PEP output is from 200 to 300 mw, with the dc input power to the final running well within FCC limits (as measured with meters having a 1/4-second ballistic characteristic).

Leonard E. Geisler, applications engineer, Electronics Engineering Consultants, Jackson, Mich.

Improving Response of Class-A Power Output Stages

In a program to improve gain and frequency response of the audio end of a fm multiplex receiver without increasing cost, a few small changes made a big difference in performance.

By changing the value of one capacitor and re-routing the ac return path of the input transformer's secondary, we were able to greatly improve over-all stage performance. Gain is at least doubled and frequency response is smoothed out over a very wide range. Previously, audio response was restricted to a range of roughly 500 to 8000 cps, with the curve falling off sharply at both ends, as in Fig. 2.

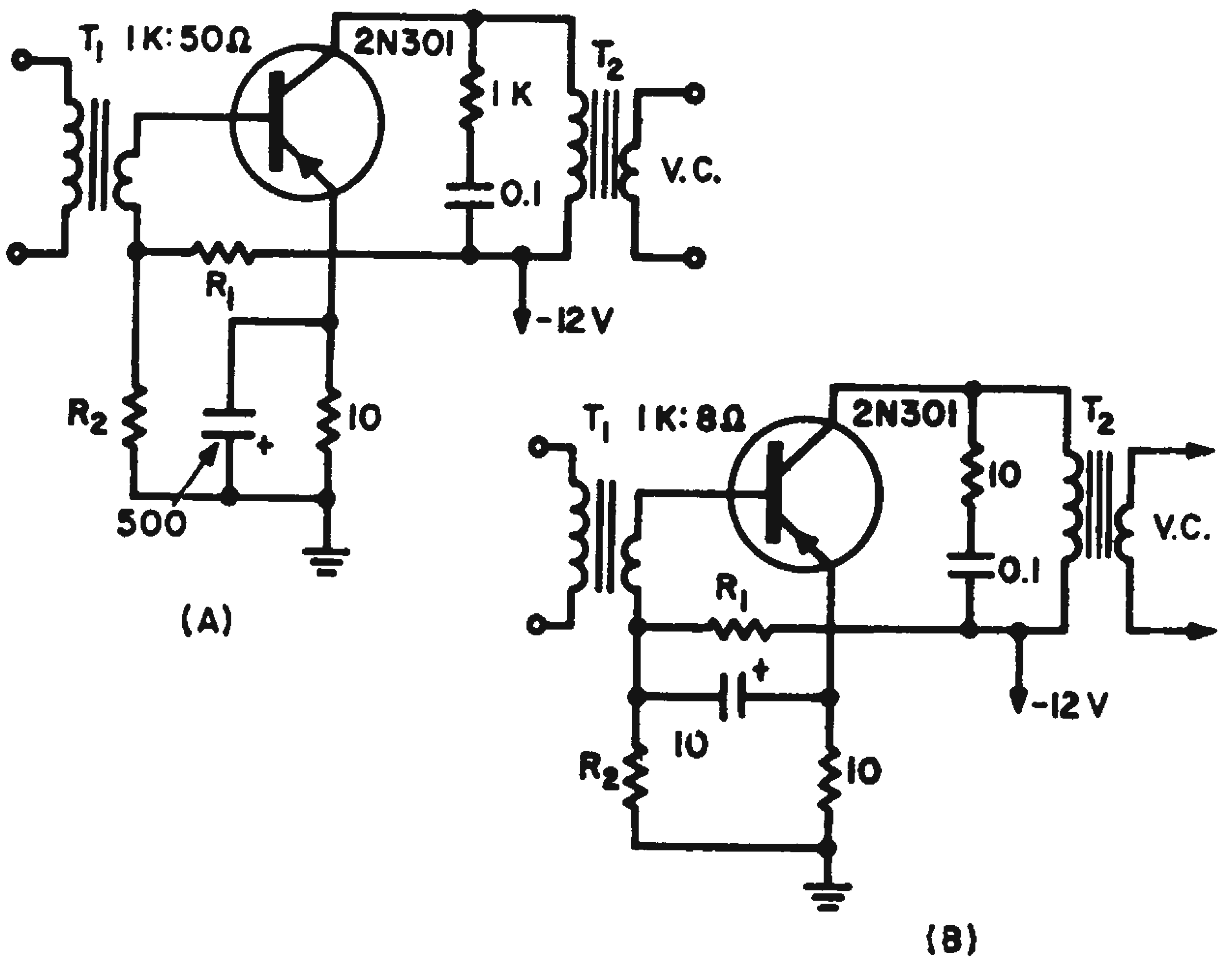

Fig. 1. Minor modification of audio stage improved frequency response.

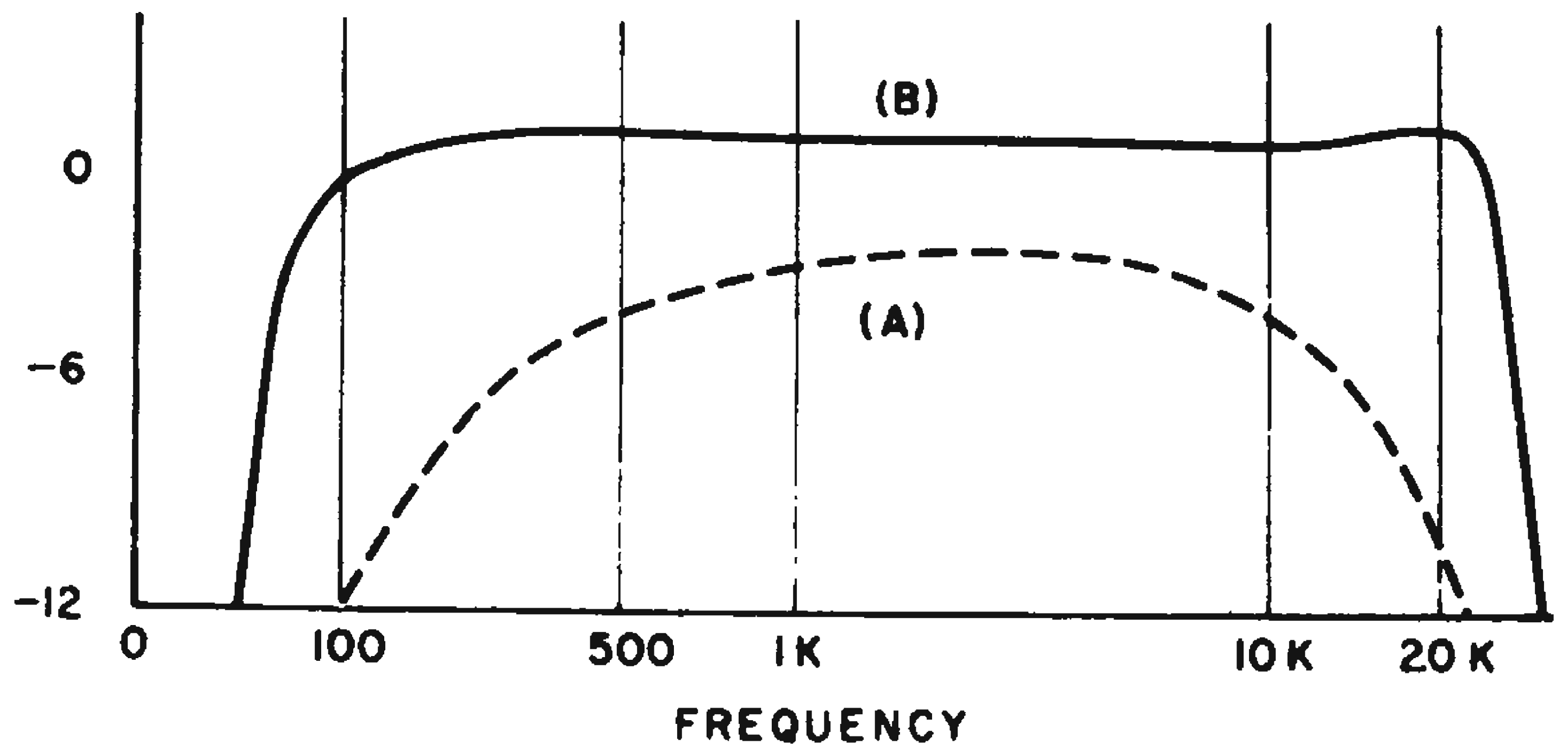

Fig. 2. Response curves corresponding to circuits *a* and *b* in Fig. 1.

The circuit functions, as nearly as we can tell, as an ac bootstrap for input signals. Signal voltage developed across the emitter resistor is fed back in phase to the low end of the input transformer secondary, automatically matching the impedances of base and transformer. Distortion is greatly reduced compared to that experienced with the conventional input circuit.

Being interested only in practical results, we have not analyzed the circuit rigorously. Use of the circuit also lowered the over-all complexity of the set.

Leonard E. Geisler, applications engineer, Electronic Engineering Consultants, Jackson, Mich.

Double-Balanced Mixer Uses No Transformers

A double-balanced mixer that can reject both input signals in the output usually requires two transformers. Here is a circuit that does not need them at all.

V_{1a} and V_{1b} are input cathode followers, which drive a cross-coupled circuit, consisting of V_{2a} and V_{2b}. V_{2a} operates as a grounded-grid amplifier and V_{2b} operates as a grounded-cathode amplifier for input signal e_a. At the anodes of these tubes the fundamental frequency is canceled, leaving only even-order harmonics. The same thing happens to the input signal e_b, with the roles of V_{2a} and V_{2b} reversed. In this way only the difference frequency and even harmonics appear across the common anode load resistor. Exact balance is obtained with the 10-K potentiometer.

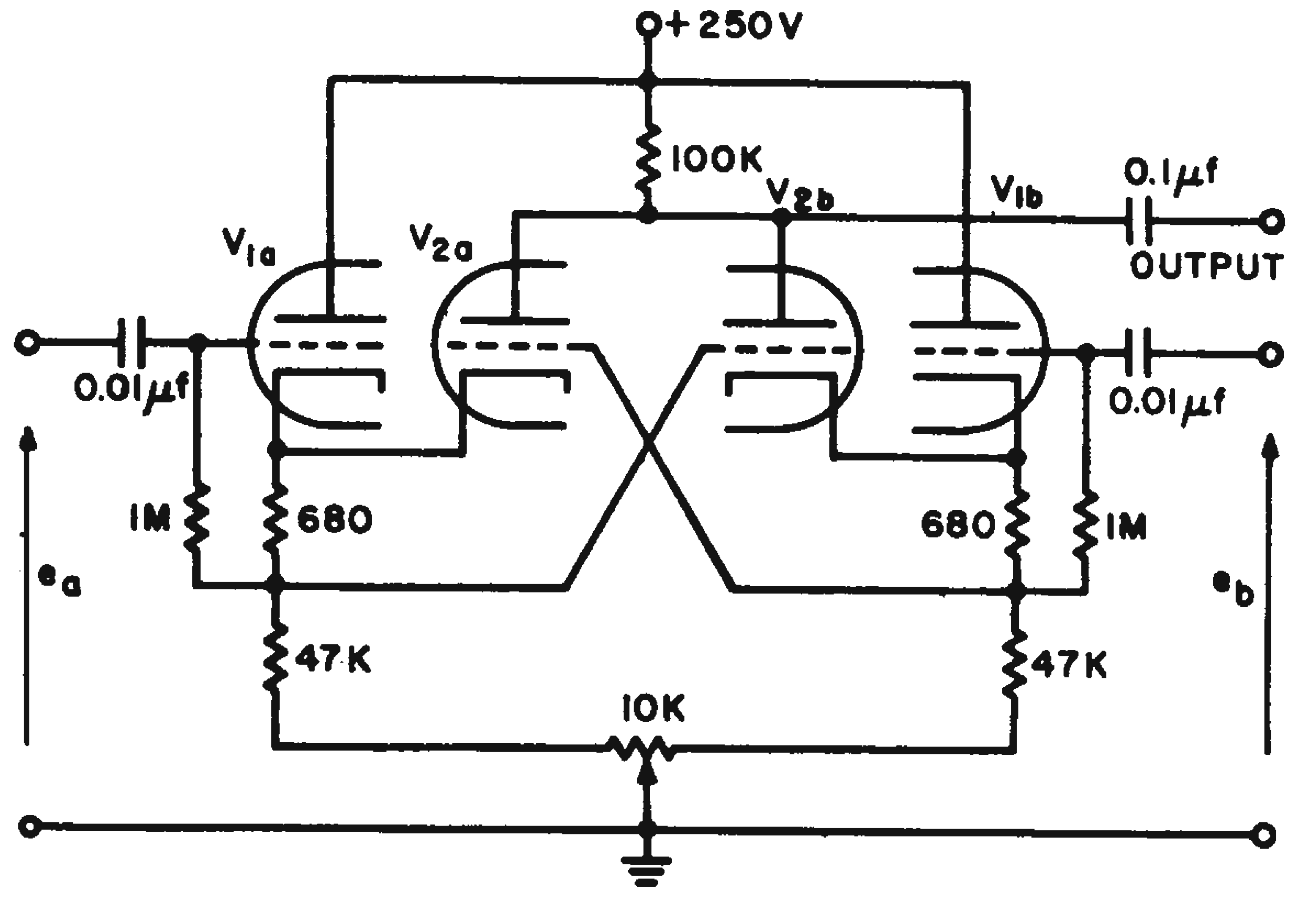

Transformerless mixer rejects both inputs in output.

Circuit values are shown in the diagram for application in an audio-frequency beat oscillator. Filter design is simple in this case since the amplitude of unwanted frequencies is very small.

H. L. Han, electrical engineer, Technological University, Delft, Netherlands.

Signal-Conditioning Instrumentation Networks

A common problem in standard telemetry subcarrier transmission is that of supplying correct modulation sensitivity swings for each voltage-controlled subcarrier oscillator's (V_{sco}) center frequency. This problem can be solved best through network-conditioning of the various unrelated vendor items employed.

A reliable signal-conditioning circuit, which can provide a +2.5 v dc voltage level for interstage dc biasing, is shown in the diagram. The circuit is designed to handle the inputs of several V_{sco} units. The normal zero reference input to each V_{sco} had to be conditioned to a dc bias level of about 2.5 volts so that the signal input to each V_{sco} would be in the range of 0 to 5 volts dc, correctly centered at +2.5 volts.

Other objectives included minimum loading effect, crosstalk, noise, and drift with less than 1-per cent linearity change from best straight-line interactions to the V_{sco} units.

The system uses a Zener reference diode as the constant voltage element for control circuit applications. These elements can be utilized if properly operated in the saturation region of their inverse characteristic. Furthermore, the diodes provide excellent regulation and stability over a wide performance range.

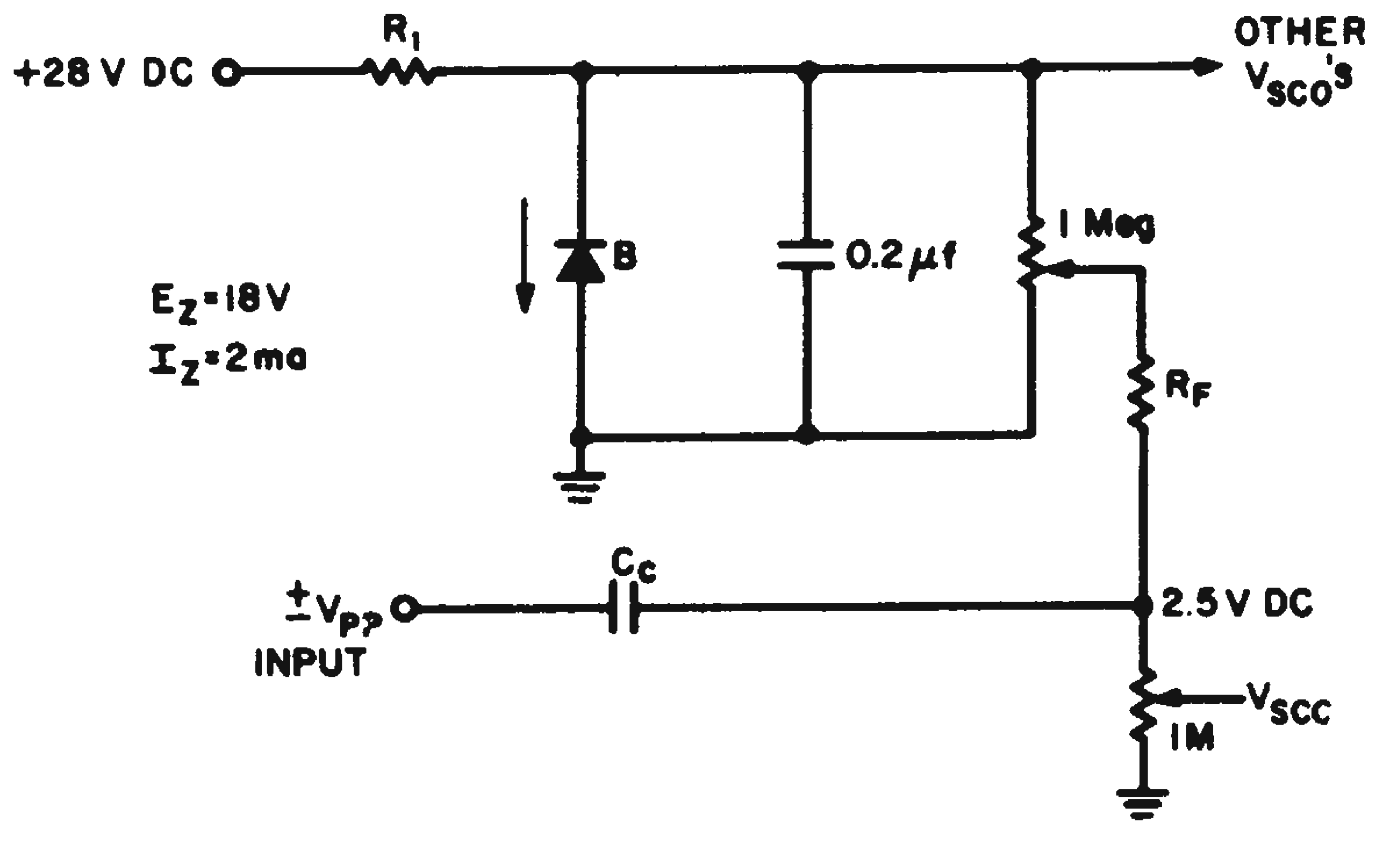

Signal conditioner sets operating level for voltage-controlled oscillators in telemetry system.

Since a 28-volt supply was available for this buffer signal-conditioning network, I_z for the diode was selected as 2 ma. This current is well within the Zener's thermal dissipation limitations and avalanche breakdown region. With the E_z design center at 18 volts, the remaining calculations are straightforward:

$$R_1 = 10 \text{ volts drop}/2 \text{ ma} = 5 \text{ K}$$
$$X/R_f = 2.5 \text{ volts}/1 \text{ meg}$$
$$X/4.32 \text{ meg} = 2.5 \text{ volts}/1 \text{ meg} = 10.8 \text{ volts required}$$

where: 1 meg is the V_{sco} input impedance, and 2.5 volts is required dc bias level. One-meg potentiometers are selected to provide no loading effect on channels and 4.32-meg fixed series resistors are selected to limit drain on B+.

E. G. Fonda, section manager, Philco Corp., Palo Alto, Calif.

Push-Pull Tripler Improves Gain at VHF

It is difficult to generate the third harmonic of a signal with reasonable gain and efficiency by using a single-ended circuit. However, in a balanced push-pull circuit, even harmonic currents in each half of the center-tapped output transformer oppose and are canceled out, whereas odd harmonic currents add. When tuned to the third harmonic, the output tank is pulsed each one and one-half cycles as opposed to each third cycle for a single-ended tank circuit. This considerably increases third harmonic power available in the tank circuit. Also, harmonic distortion of the output waveform is lowered by orders of magnitude.

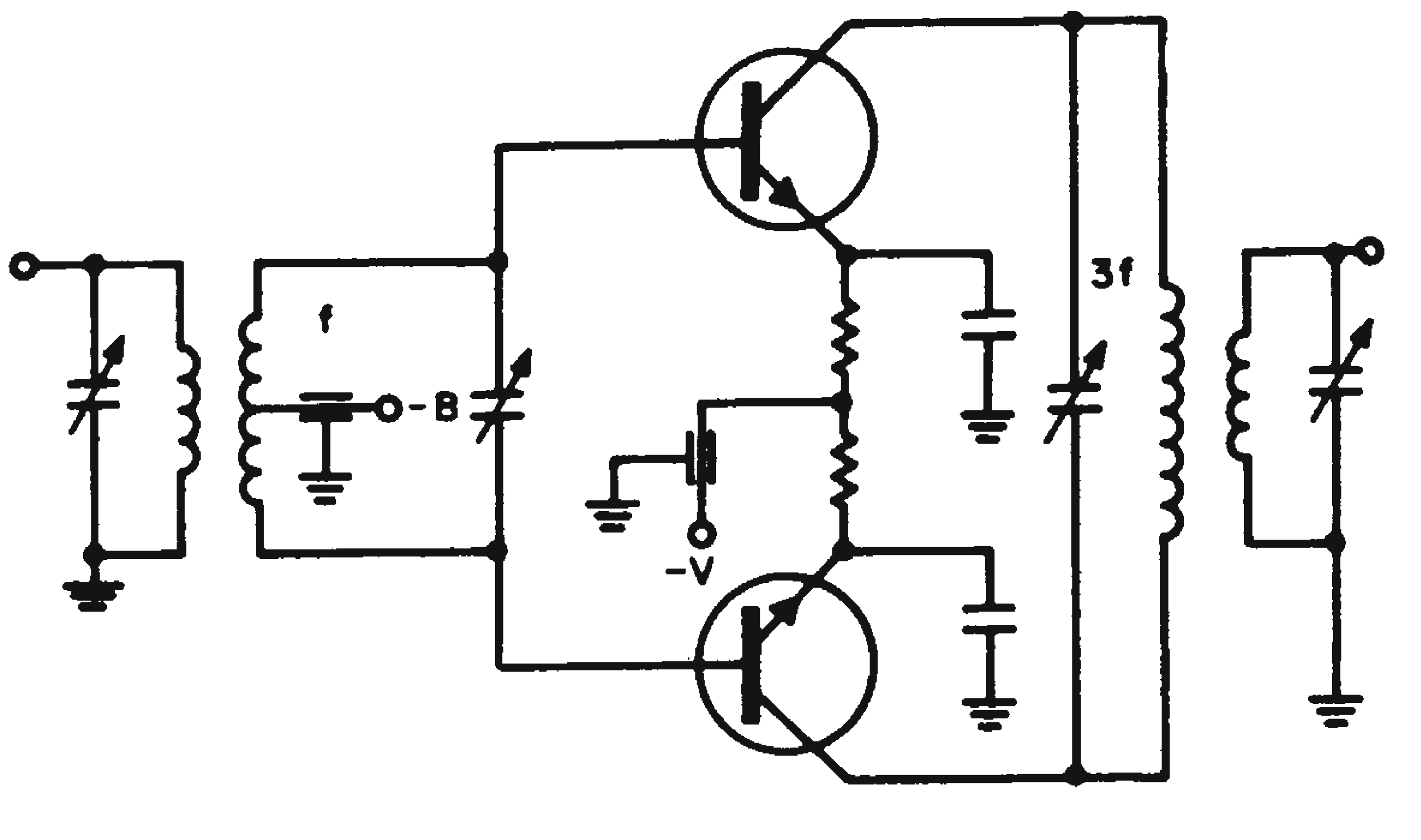

Using push-pull arrangement, gains of 7 db can be obtained in extracting third harmonic.

When driving the circuit with 5 mw at 50 Mc, gains greater than 7 db can be obtained.

Roy F. Sloan, associate engineer, the John Hopkins University, Silver Spring, Md.

Simple VLF Receiver Uses Single Tuned Stage

A simple receiver for vlf that can select stations over the entire band can be constructed using only one stage of selection with very high Q. This can be achieved, as shown, by using the Darlington circuit in a Q-multiplier configuration.

The grounded base input stage allows matching to a 50-ohm antenna cable while reflecting a high impedance across the tuned circuit, through the 1:15 primary-to-secondary-turns ratio of transformer T_1. The 10-mh inductance of the secondary, together with capacitor C_1 and the capacitor selected by switch S_1, provides the frequency selection circuit. The Q of the selection circuit is increased by a feedback loop from emitter to a center tap on T_1. Switch S_2 provides a narrow- or wide-band capability by opening the loop.

Good circuit stability is achieved by employing large dc emitter degeneration, using a split power supply, which enables the transistor bases to be connected directly to ground, and by using high-Q, temperature stable components in the tuned circuit.

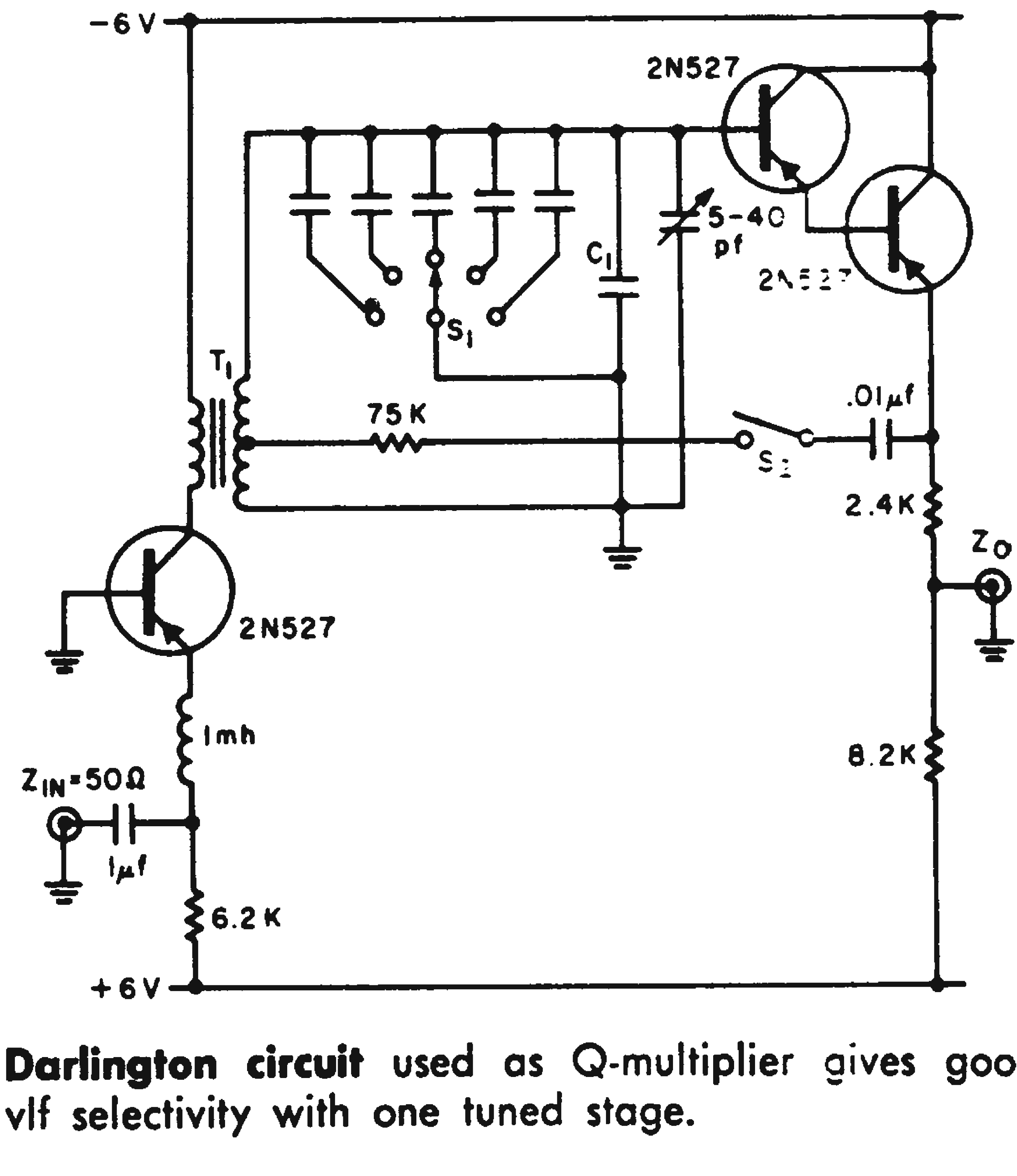

Darlington circuit used as Q-multiplier gives good vlf selectivity with one tuned stage.

This circuit can be followed by simple rc amplifiers to give the desired output level.

Richard W. Couch, research staff member, General Dynamics/Electronics, Rochester, N. Y.

Double Conversion Improves Transistorized FM Receivers

Areas having a large number of fm stations require a receiver capable of separating powerful and weak signals without seriously affecting audio fidelity because of narrow IF passband.

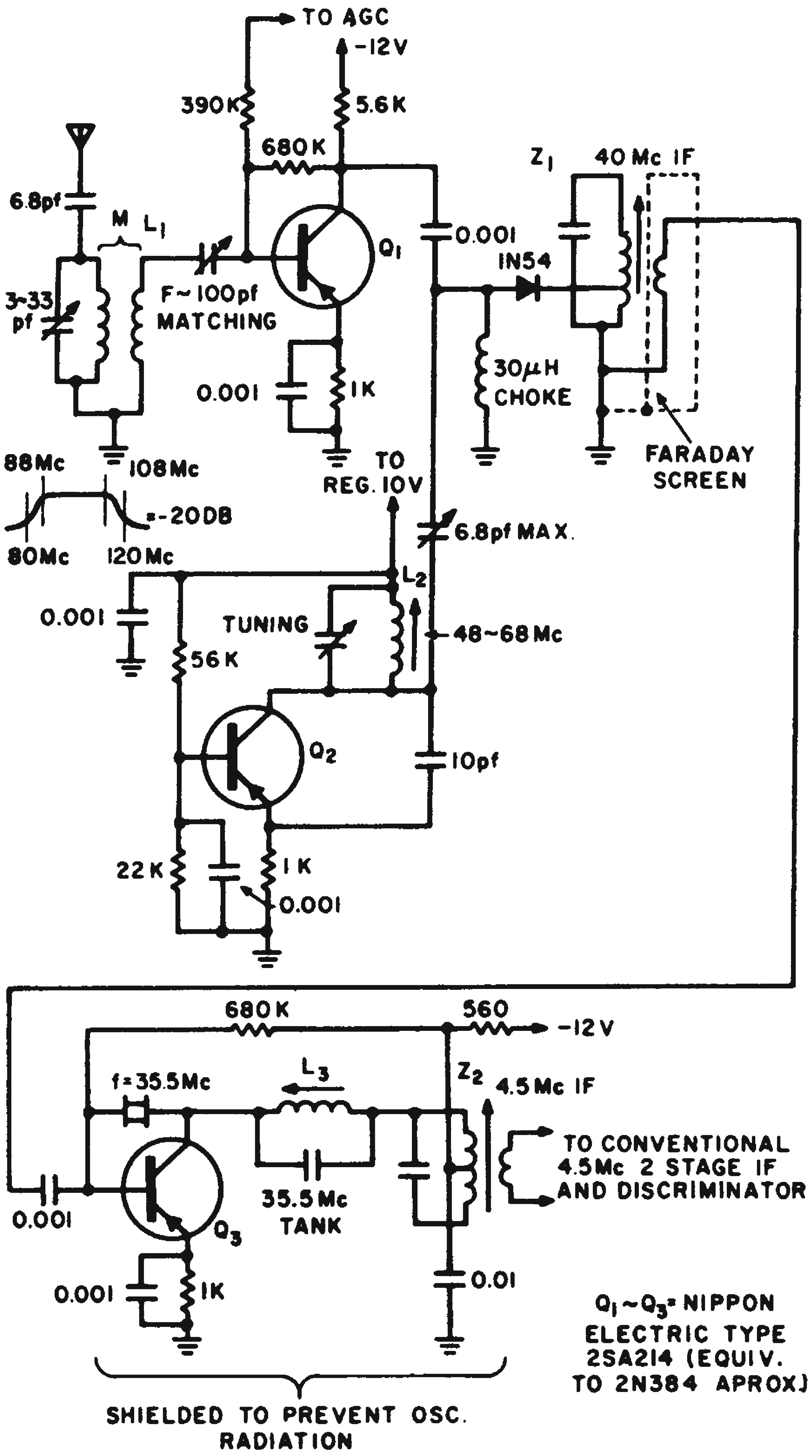

Double conversion fm receiver makes use of low-cost Citizens Band crystal.

Features of the system shown here include reduced image response, due to double conversion. (about 60 db down) Selectivity, noise figure and quieting are excellent and greater over-all gain is obtained using fewer transistors. A single, inexpensive tuning capacitor reduces alignment and tracking problems.

This system lays no particular claim to originality except that it has never been applied to home-entertainment fm receivers. In a transistorized fm receiver of conventional design, high-frequency transistors pose an economic problem. By use of double conversion, transistors having only a nominal F_T of about 75 Mc need be employed in all rf circuits except the first stage.

An inexpensive HC/18-U crystal is used in an overtone circuit to convert the 40 Mc first IF down to 4.5 Mc. Crystals with a tolerance of 0.01 per cent to 0.008 per cent can be employed. AFC is not needed as the result of using crystal control.

The diagram shows a practical set, now in production, which is built in accordance with the system outlined here. Shunt diode noise limiters are used in the 4.5-Mc IF amplifiers, developing both AGC and tuning meter current. The diodes generate less distortion than transistor limiters. A Foster-Seeley discriminator is used to ensure a low over-all distortion. Only one type transistor is employed throughout the rf portion of the set.

Leonard E. Geisler, applications engineer, Electronic Engineering Consultants, Jackson, Mich.

Extending the Range Of Pi Network Tank Circuits

A large increase in the useful frequency range of pi-network tank circuits used in transmitter finals can be obtained by a simple modification. The circuit was developed in an effort to redesign a 3.5 to 30-Mc amateur transmitter to add operation in the 50-54 Mc band.

Fig. 1a shows a conventional pi-network tank. Capacitor C_1 controls tuning and C_2 adjusts loading. L_1 is tapped and portions of the coil are shorted out for higher frequency operation. The circuit's upper frequency is limited by the minimum capacitance of C_1 and the need to maintain a reasonable L/C ratio.

Addition of vhf tank $L_2 - C_3$ to the conventional circuits is shown in Fig. 1b. S_1 grounds the junction of L_1 and C_2 for vhf operation. For low-frequency operation, C_3 is set to a minimum and becomes part of the tube shunt capacitance. L_2 is small enough to be lumped with the lead inductance which is always present.

Fig. 2 shows the equivalent circuit for vhf operation. C_3 is now the tuning control and C_1 is the loading control. L_1 acts as an rf choke and appears as an open circuit at vhf.

The efficiency of the circuit at 50 to 54 Mc was equivalent to that achieved at lower frequencies and the low frequency performance was as good as before modification. No tendency toward parasitics or other spurious oscillation due to the $L_2 - C_3$ was observed. C_1 and C_3 were operated through a dual-concentric shaft arrangement to preserve the original front panel arrangement.

R. C. Mong, senior engineer, Raytheon Co., Waltham, Mass.

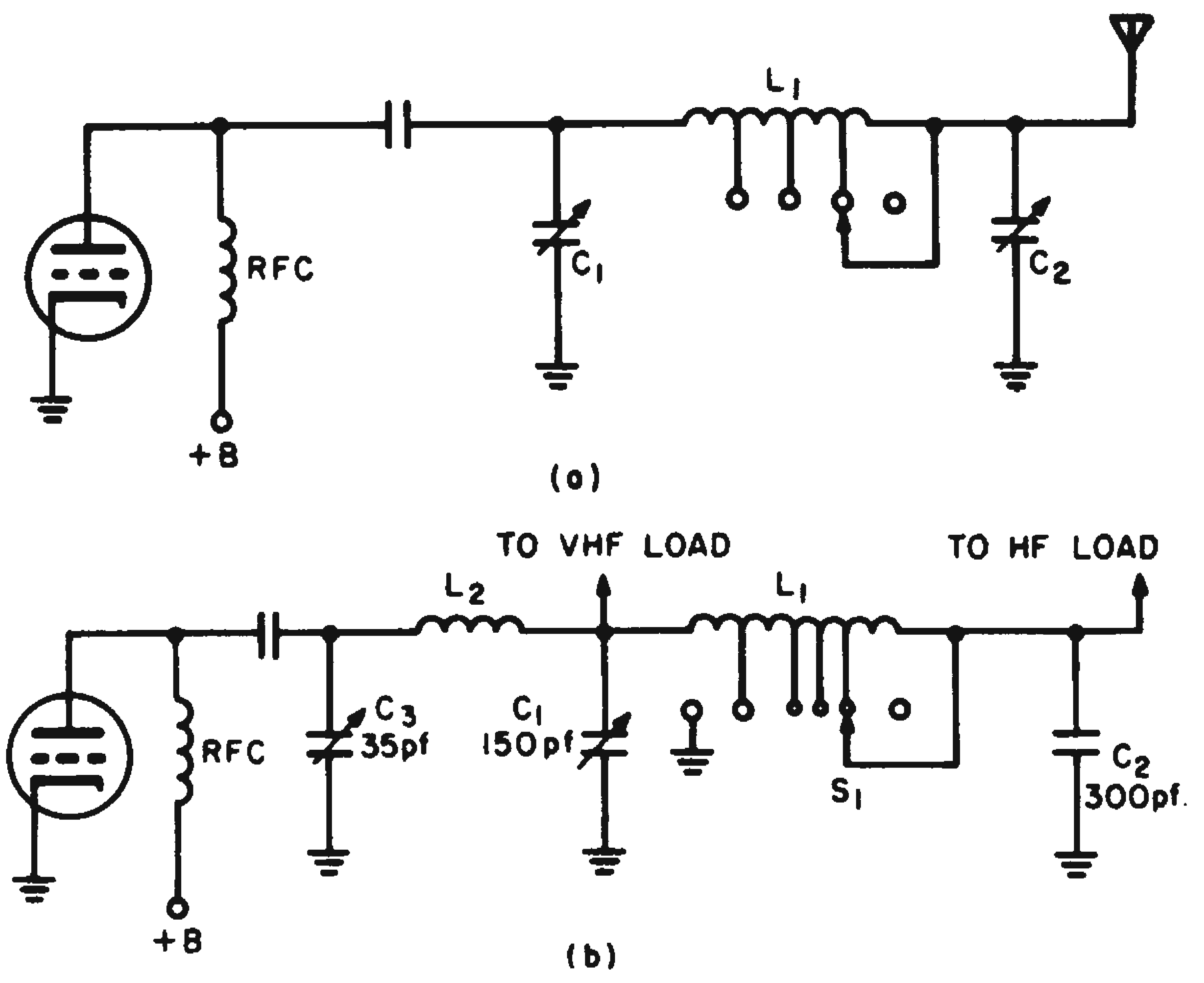

Fig. 1. Basic multiband pi-network tank (a) can be modified to extend range by adding two components (b).

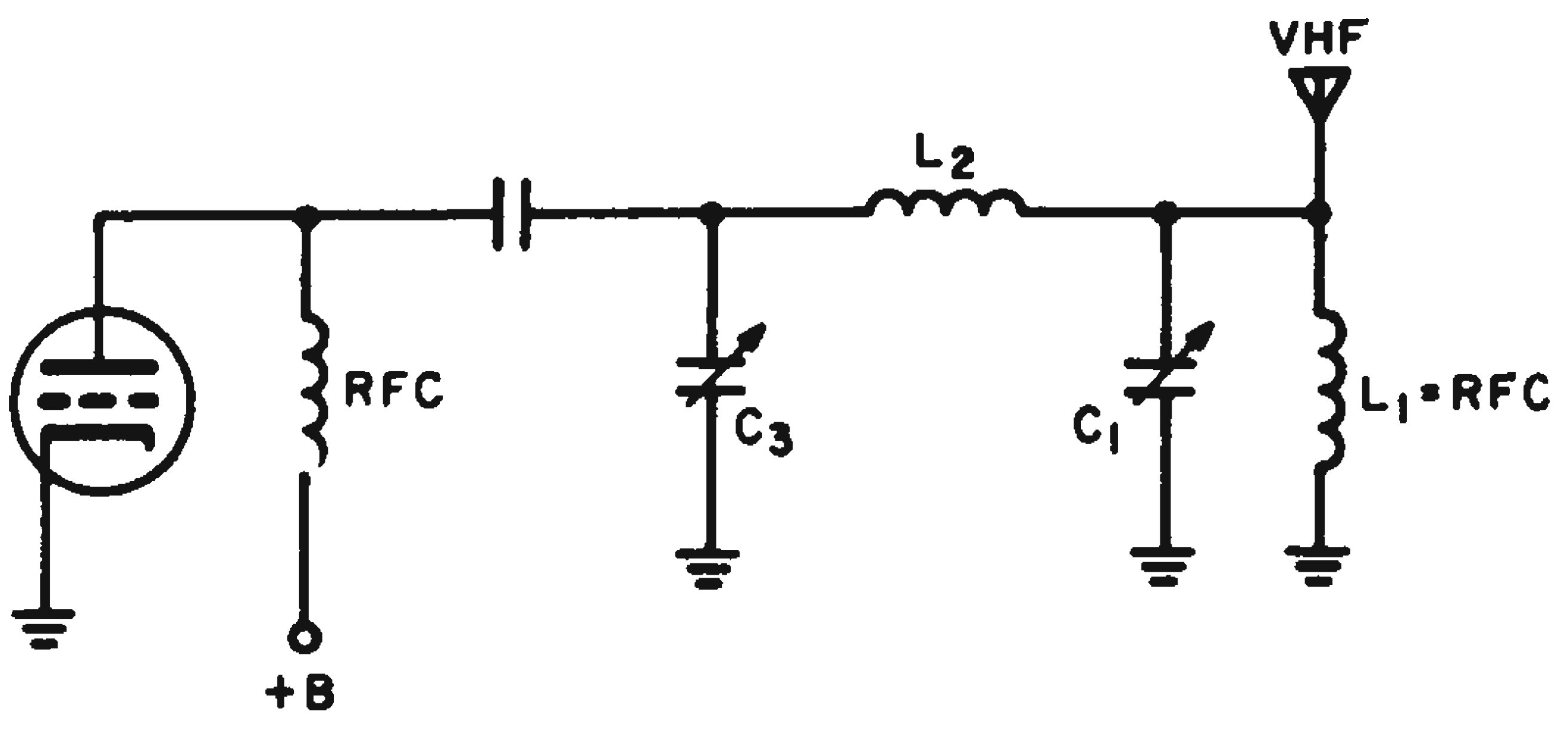

Fig. 2. Equivalent circuit of tank for vhf operation shows similarity to basic pi-network.

Band Switcher Uses Light-Sensitive Resistors

We have devised a bandswitching circuit using light-variable resistors that has been successful in a number of multirange, low-power oscillating devices. The circuitry is simple and rugged. And, it eliminates a costly rotary switch that has low rf leakage, because our switch does not carry any rf at all.

Light-variable resistors, connected across successive portions of an rf inductor, Fig. 1, are used for the switching. Illuminating any of the photoresistors with an essentially saturating light source effectively shorts out the portion of the coil bridged by the resistor. This changes the tuning characteristics of the LC circuit.

This scheme could be the solution to a multitude of problems associated with receiver and oscillator design, and in remote-control and telemetering applications.

An alternate configuration is shown in Fig. 2.

R. M. Zilberstein, project engineer, Andersen Laboratories, Inc., West Hartford, Conn.

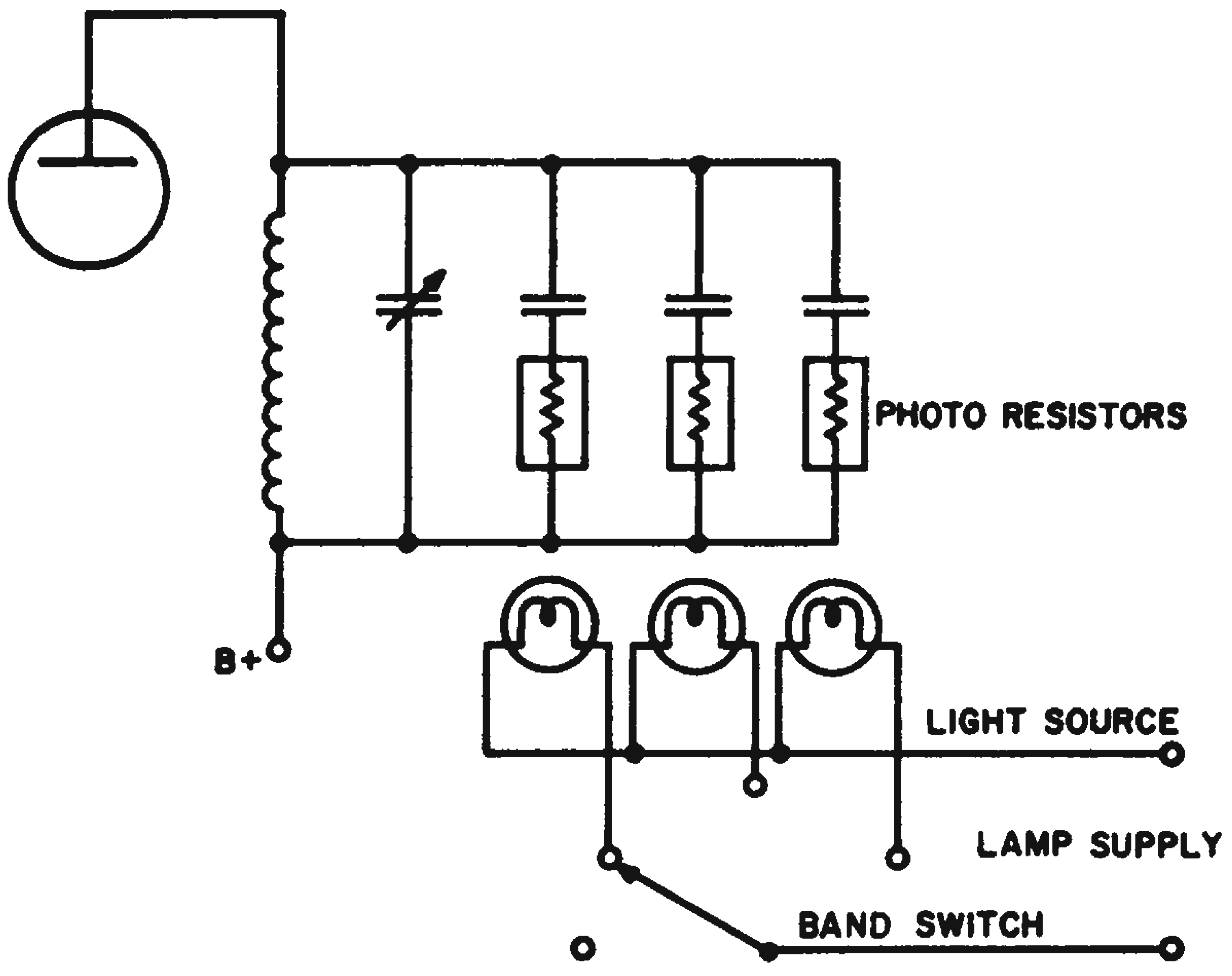

Fig. 1. Bandswitching is accomplished by shining light on photosensitive resistors and shorting out sections of the oscillator coil.

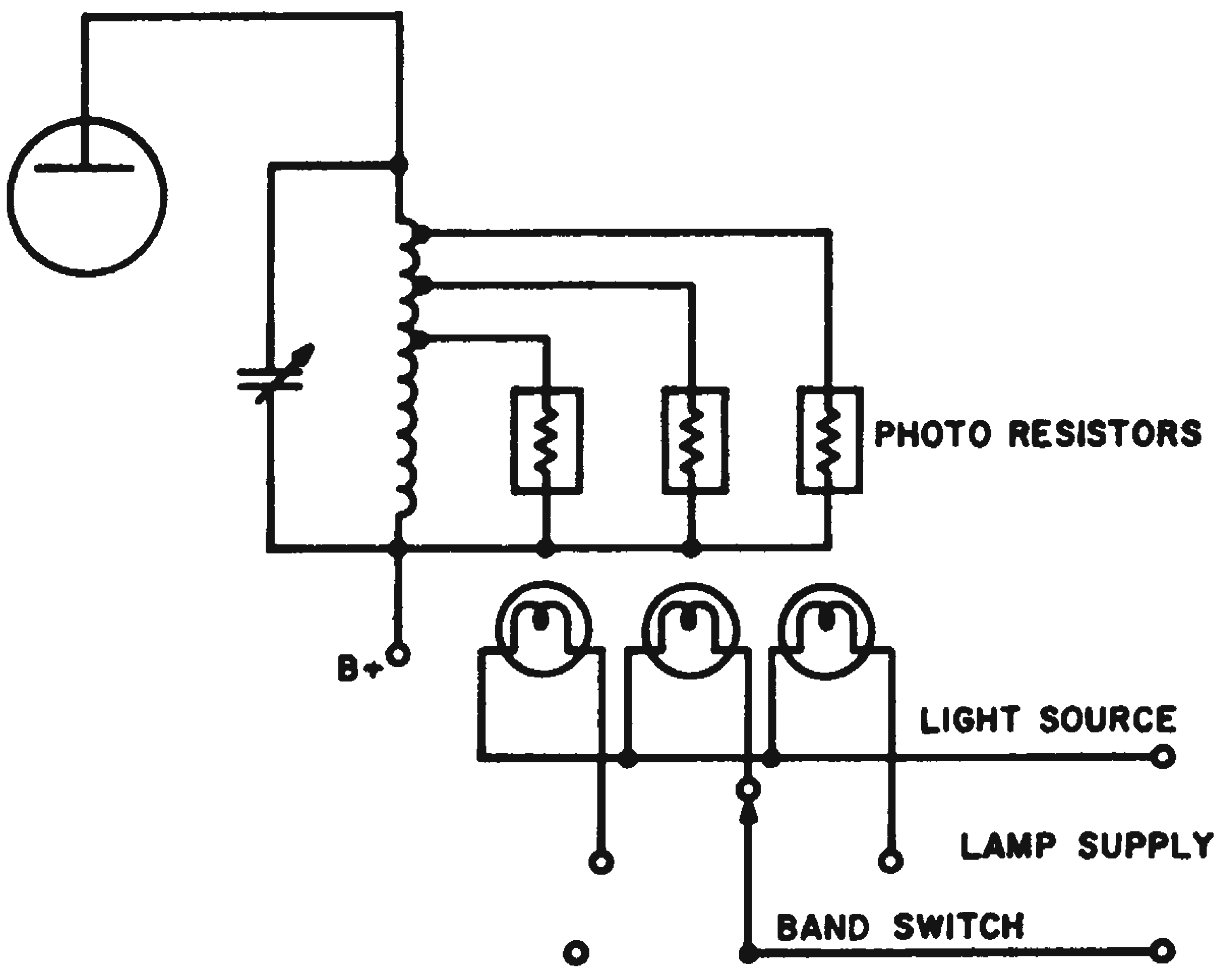

Fig. 2. Alternate bandswitching configuration also is feasible.

Unpolarized Clipper Makes AFC 'Let Go' of Strong Signal Channels

The more effective audio frequency control is in a radio receiver, the harder it is to make it 'let go' of a strong signal and transfer to an adjacent, but weaker, signal. This is an inherent difficulty with afc in any device that uses a continuously variable oscillator. It is particularly true for fm receivers that have broadband IF and derive the afc bias from the fm detector. With full afc action it may be impossible to tune in weaker channels without first disabling the afc.

Of several possible methods for disabling afc, adding an unpolarized dc clipper, as shown, proved to be the simplest. It can be added to any afc without disturbing the original circuit and without adding tubes or tuned circuits.

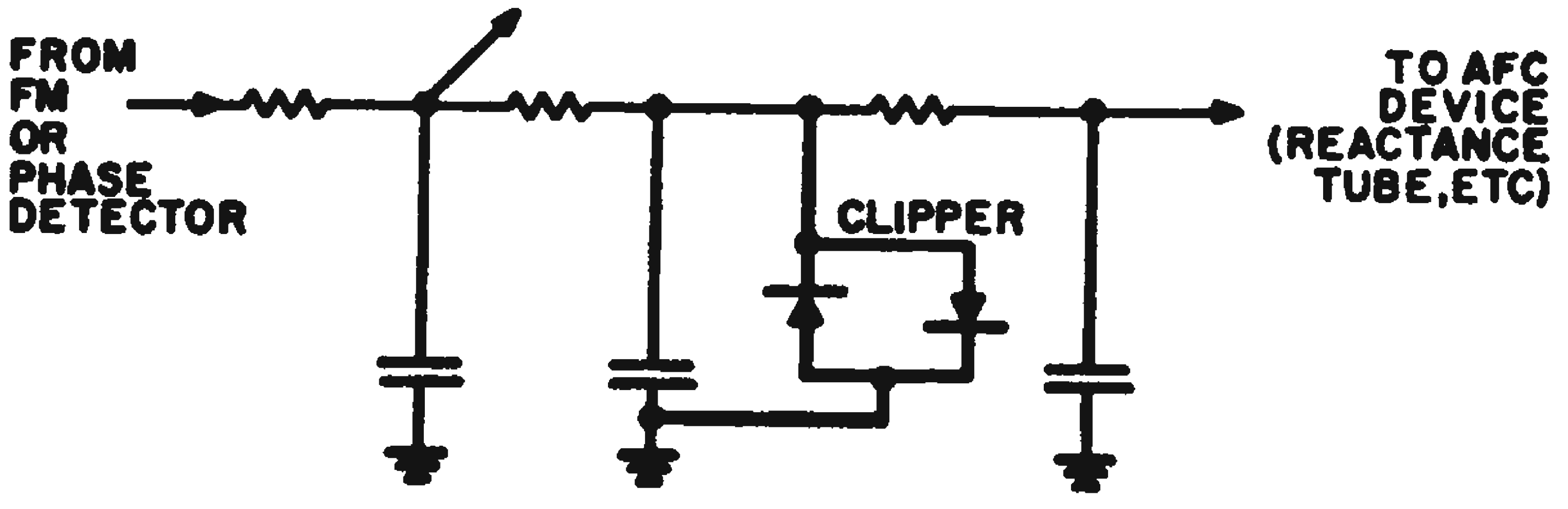

Clipper added to circuit prevents development of large afc bias voltages, which can swamp out weak signals.

The clipper can consist of two very low voltage Zener diodes or, each "diode" can consist of 7 to 9 small selenium plates in series. (The latter arrangement uses the forward knee of the rectifiers.)

At or near center tuning the full gain of the afc circuit is available for holding on to weak signals. When tuning away from strong signals, the clippers prevent large afc bias from being developed. They permit the signal to be released so that weak adjacent channels can be received.

In the Craftsmen C500 receiver in which the clipper was installed, it was found that if it limited maximum afc bias to 1.5-2.5 v, the results were excellent. (Without the clipper, strong signals produced as much as 20-25 v maximum bias, completely swamping out nearby weaker channels.)

Louis W. Reinken, Reinken Rectifier Engineering, Plainfield, N. J.

Transistor Squelch Circuit Uses Minimum of Components

A simple and inexpensive squelch circuit is designed for use with transistorized communications receivers is shown in the illustration. With no signal coming into the receiver, an agc-controlled IF amplifier, Q_1, is operating at its maximum collector current and gain.

The voltage drop across R_1 is also maximum under this condition and is used to bias Q_2 on. Current through Q_2 is determined by the value set on the variable resistor R_2. If R_2 is set so that the current flow in Q_2 causes the voltage drop across R_3 (which is also the emitter resistor of Q_3) to be greater than the voltage from base-to-ground minus V_{be} of Q_3, then Q_3 is turned off. Under these conditions, there is no output from Q_3 and the receiver is quiet.

Now, assume that a signal is being picked up by the receiver. Under this condition, when the agc is acting, the current through Q_1 is reduced by an amount depending on the signal strength. When this occurs, the voltage drop across R_1 is reduced, thus reducing the collector current through Q_2. This produces a lower voltage drop across R_3. When this voltage becomes less than the voltage from base-to-ground minus V_{be}, Q_3 begins to turn on; this results in an output to the audio amplifier.

This circuit has been incorporated into citizens-band receivers with good results. It was found to be capable of squelching out up to a 300-μv signal into the receiver and still maintain good control down to something less than 1 μv.

It should be noted that between full on and full off conditions of Q_3, small amounts of collector current may result in some audio distortion depending on the volume-control setting. This distortion should not be ob-

Squelch-control transistor, Q_2, cuts off audio when no input signal is present.

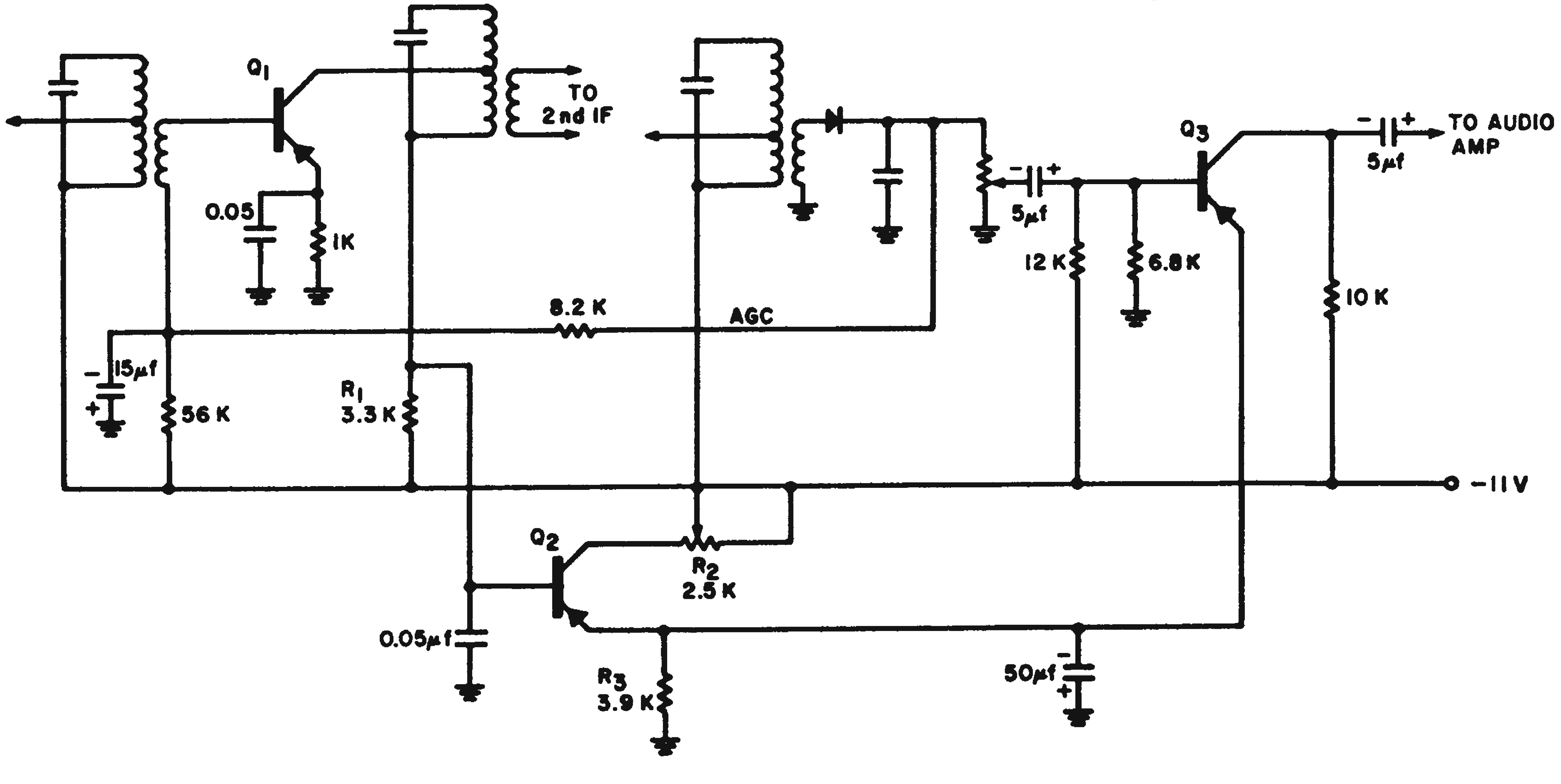

jectional and under ordinary operating conditions (where the signal received is many times greater than that required to just trigger the squelch), this distortion is not present.

When the squelch pot R_2 is set to just squelch out any signal being received, approximately 3-db increase in signal level will completely override the squelch action. The amount of increase is dependent, of course, on the level of the original signal, the gain and sensitivity of the receiver and the amount of agc of the receiver.

The IF transistor was set to idle approximately 0.75 ma under no-signal conditions. The squelch transistor may be any small-signal npn unit, such as the 2N1304; the audio transistor may be any small-signal pnp alloy, such as the 2N1274.

Richard E. Morgan, Transistor Products Div., Texas Instruments Inc., Dallas, Tex.

Photoconductor Commutator Has Simplicity and Isolation

We needed an electronic, two-channel, low-rate commutator to be used with an fm-fm telemetry system. Such a commutator was devised using the Raytheon CK1114 Raysistor. This is a photoconductive cell plus a grain-of-wheat lamp in a TO-5 case. By switching the lamp full on and off, the resistance of the photoconductor may be switched from 0.5 ohm to 300 megohms. Connecting two CK1114s to the input of a subcarrier oscillator and alternately switching them, we had a two-channel commutator with 300 megohms isolation between input channels to the telemetry system.

The circuit is an astable multivibrator driving two transistor switches, which switch the lamps in the Raysistors alternately. Since the photoconductors are electrically independent of the lamps, the signal channels are electrically isolated from the switching circuit. Dc input signals may be of either polarity. The passband is flat from dc to 1 mc.

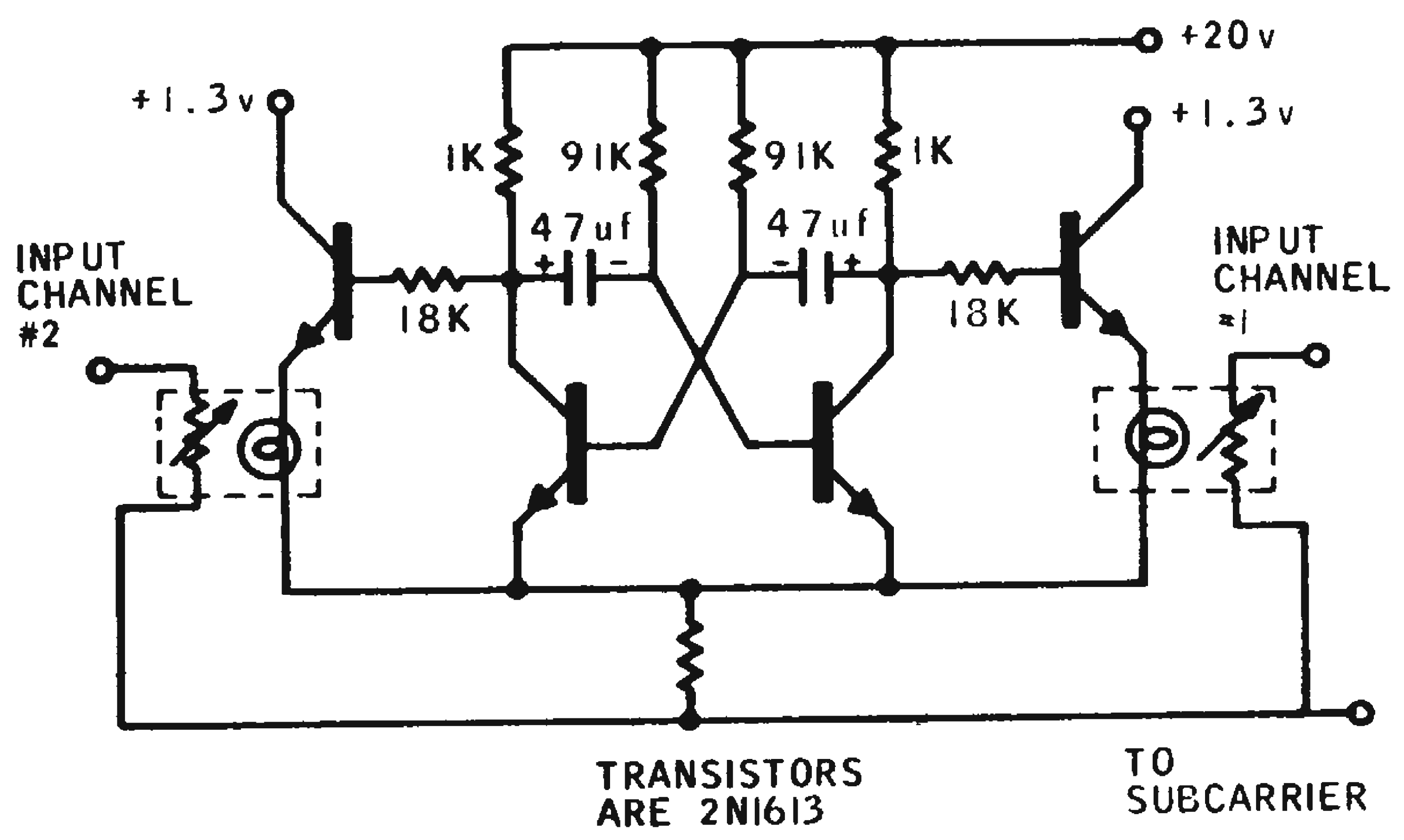

Electrical isolation in telemetry circuit is obtained by using light-controlled photoconductor.

C. G. Blanc, instrumentation engineer, R. C. Crawford, electrical technician, U.S.N.O.Y.S., China Lake, Calif.

Reducing Power Dissipation In Emitter-Follower Circuits

The emitter-follower circuit shown in Fig. 1a is used to send digital information over a transmission line into a load represented by R_L. In this circuit it is desirable to have i_e as large as possible (and, therefore, have R_1 as small as possible) in order to (1) reduce the rise time—this time

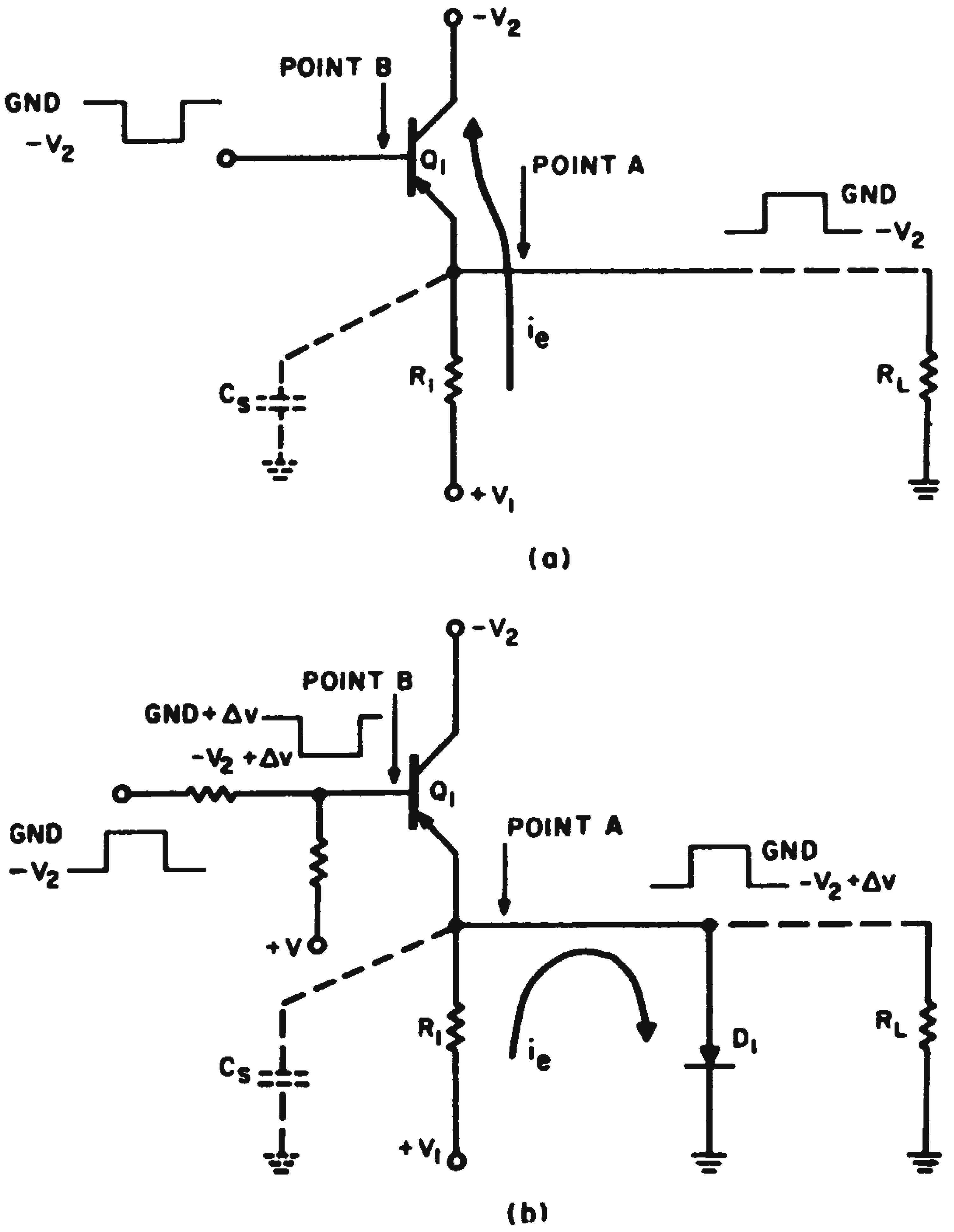

Fig. 1. Basic emitter follower (a) is modified by adding diode (b) to reduce current through transistor.

is a function of R_1 and the stray capacitance C_s, (2) provide for impedance matching between the load and source, and (3) reduce any noise which could feed back from the line through Q_1. When the input is at the $-V_2$ potential, the power dissipation in Q_1 is small because the voltage drop across Q_1 is negligible; but when the input is at ground potential the power dissipation equals i_eV_2. Thus the maximum power dissipation rating of Q_1 can be the limiting factor for i_e.

To increase i_e and still not exceed the maximum power-dissipation rating of Q_1 the circuit shown in Fig. 1b is recommended. Here a biasing network inserted at point B, and a clamping diode inserted at point A is used to modify the original circuit. When the input signal goes to ground, point B is biased slightly positive, the emitter-to-base junction of Q_1 is then back-biased because point A is clamped to ground through D_1, and Q_1 cannot conduct. Thus the previous power-dissipation problem is eliminated because the current through Q_1 is zero, and a transistor having a much smaller power dissipation rating can be used. The current, i_e, which previously went through Q_1 to the collector now goes through D_1 to ground.

Norton Markin, engineer, Sherman Oaks, Calif.

Computer Circuit Provides Simple Transistor Squelch

Adapting transistor-computer circuits to radio work can provide simple control circuits capable of handling complex jobs. A good illustration is the transistorized squelch circuit shown in the diagram.

This simple, but positively operating circuit calls for minor component value changes in the audio circuit and only four additional components, R_4, C, R_5 and the blocking transistor, Q_2. In a short-wave transistor radio, the circuit will make the set function as a monitor receiver; or, inserted into a inexpensive citizens band transceiver, the circuit will up-grade its performance.

Without an input signal, normal IF amplifier forward bias flows in the agc bus. A portion of this bias voltage is applied to the base of Q_2, biasing this transitor into full conduction, with R_5 determining the degree. With Q_2 saturated, base bias for Q_1 is diverted to ground so the driver cannot amplify incoming noise and the speaker is quiet. When a carrier is received with enough intensity to cut off Q_2, driver transistor Q_1 will conduct and amplify normally. Filter capacitor C serves to remove all but the agc signal from the signals coming from the detector.

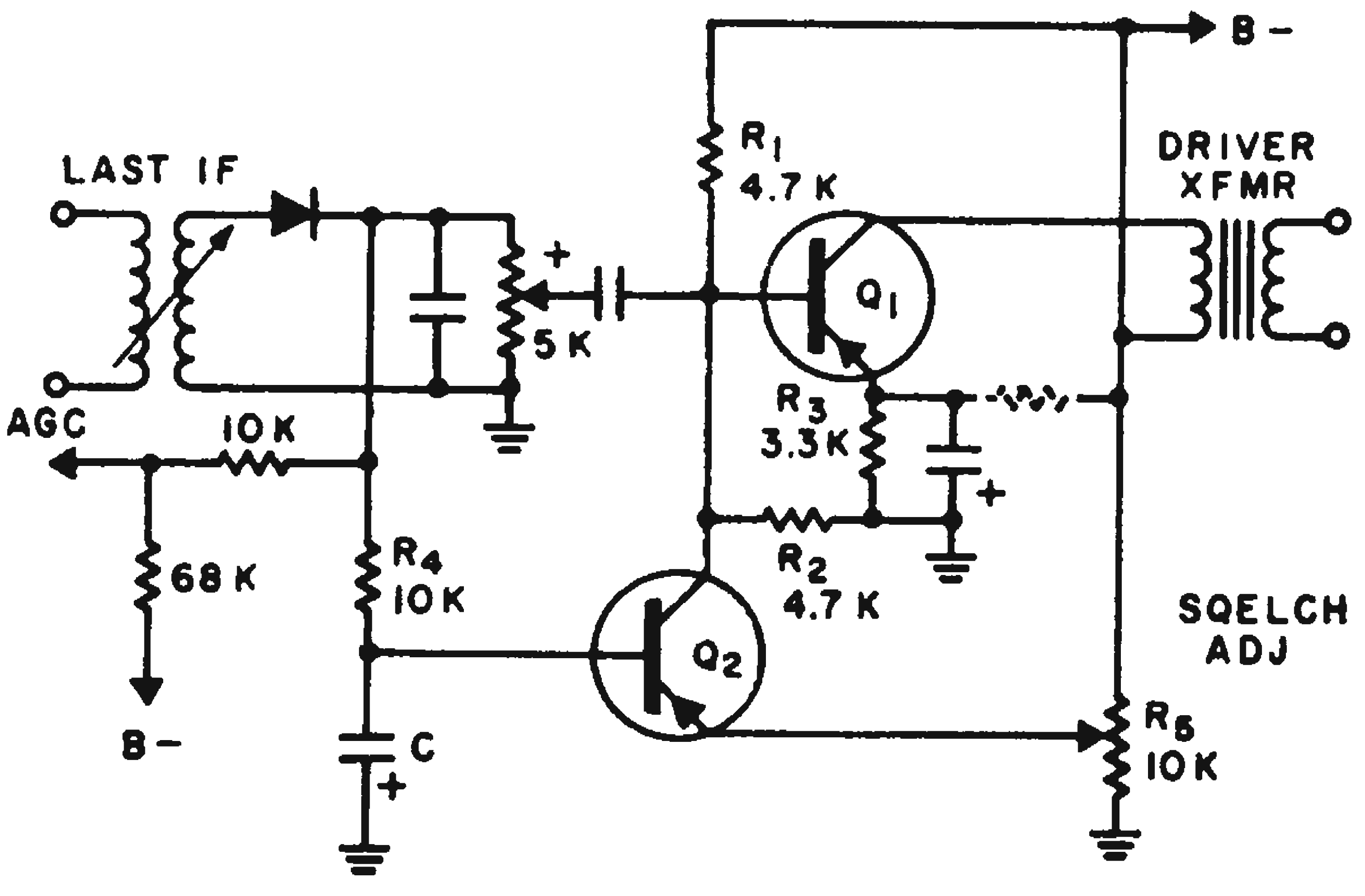

Switching circuit is adapted to audio squelch system.

If it is desired to make the squelch less sensitive to large noise pulses, a resistor (shown dotted to the emitter bias of Q_1) will ensure that this transistor will be cut off until rf operates the squelch.

Component values given are merely representative and should be arrived at by cut-and-try methods in each case.

Leonard E. Geisler, senior applications engineer, Apollo Industries, Ltd., Tokyo, Japan.

Neon Tube Serves As Tuning Indicator for FM Receiver

Here's a circuit that uses a neon tube as the tuning indicator for an fm receiver. It illuminates one electrode of the NE-2 when the receiver is off-tune in the high direction, and the other electrode when off-tune in the low.

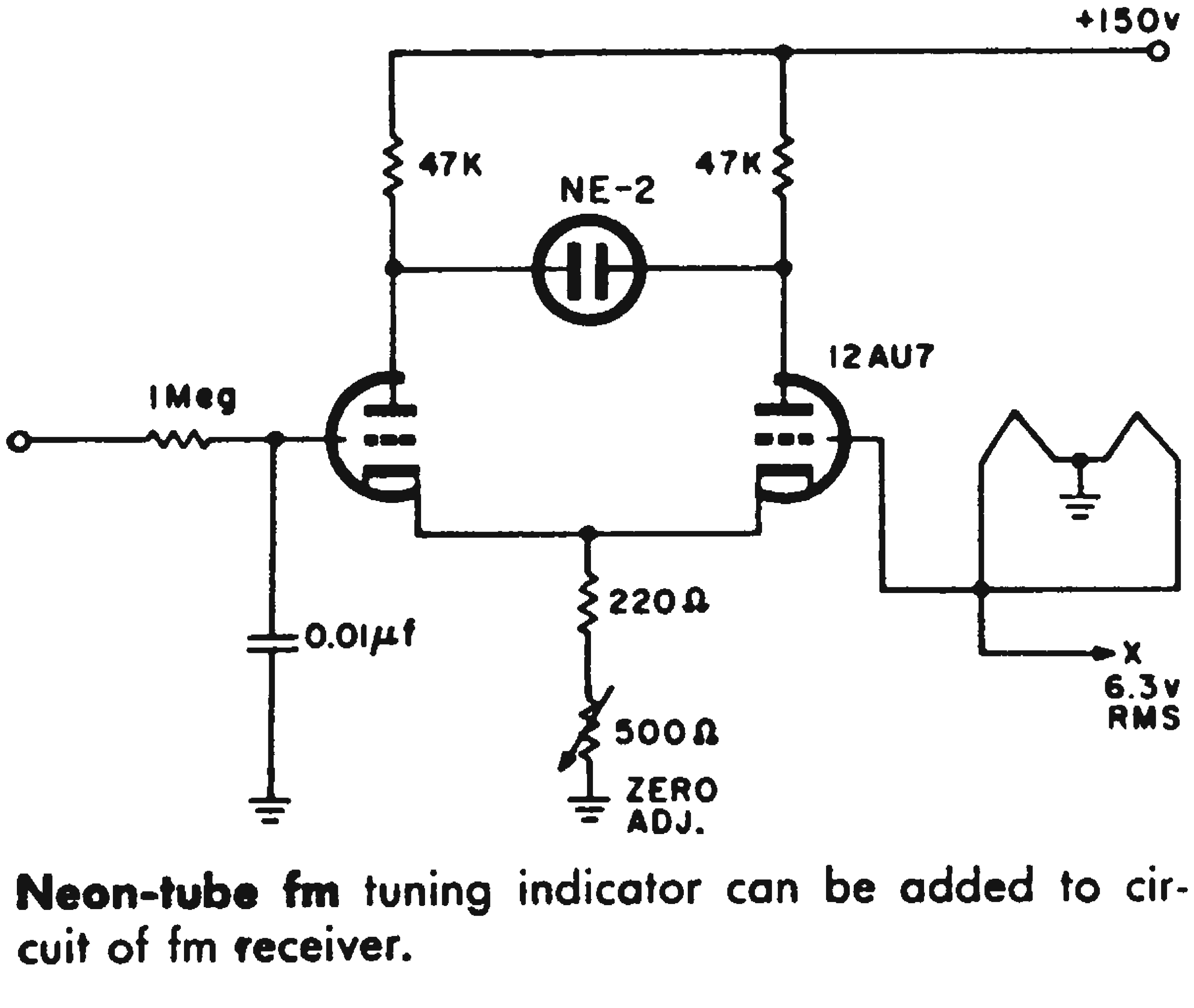

Neon-tube fm tuning indicator can be added to circuit of fm receiver.

On-tune (zero volts input), the 60 cps part of the plate voltage keeps both electrodes fired, so the tuning transition is smooth. A ± 1 v swing from the discriminator is ample for clear indication. This compares favorably with the performance of the GAL7 indicator tube.

M. W. Egerton, Jr., engineer, Towson Laboratories, Towson, Md.

AND/OR Gate Multiplexer Uses Voltage-Amplitude Coding

The circuit in Fig. 1 codes the intelligence from three logical signals for transmission through a long, single conductor to a remote station, where the signals are decoded and used as required. The coding is done in terms of voltage amplitude.

Fig. 2 shows the output voltage vs control-signal timing.

If *Q1* is true at time *P1*, transistor *T1* saturates, and the output voltage V_1 is calculated by:

$$V_1 = V_0\left[\frac{R_2(R_3+R_4)}{R_1R_2+R_1R_3+R_1R_4+R_2R_3+R_2R_4}\right] \quad (1)$$

Similarly, if *Q2* is true at time *P2*, transistor *T2* saturates and V_2 is:

$$V_2 = V_0\left[\frac{R_3}{R_1+R_3}\right] \quad (2)$$

If *Q3* is true at time *P3*, both *T1* and *T2* saturate and V_3 is:

$$V_3 = V_0\left[\frac{R_2R_3}{R_1(R_2+R_3) + R_2R_3}\right] \quad (3)$$

Germanium diode *CR-1* and resistor *R4* conduct only when *T1* is saturated and *T2* is cut off. Their purpose is to reduce the voltage of the first step at *P1*, so that changes between voltage steps are equal.

Jack McGruder, electrical engineer, Hughes Aircraft Co., Fullerton, Calif.

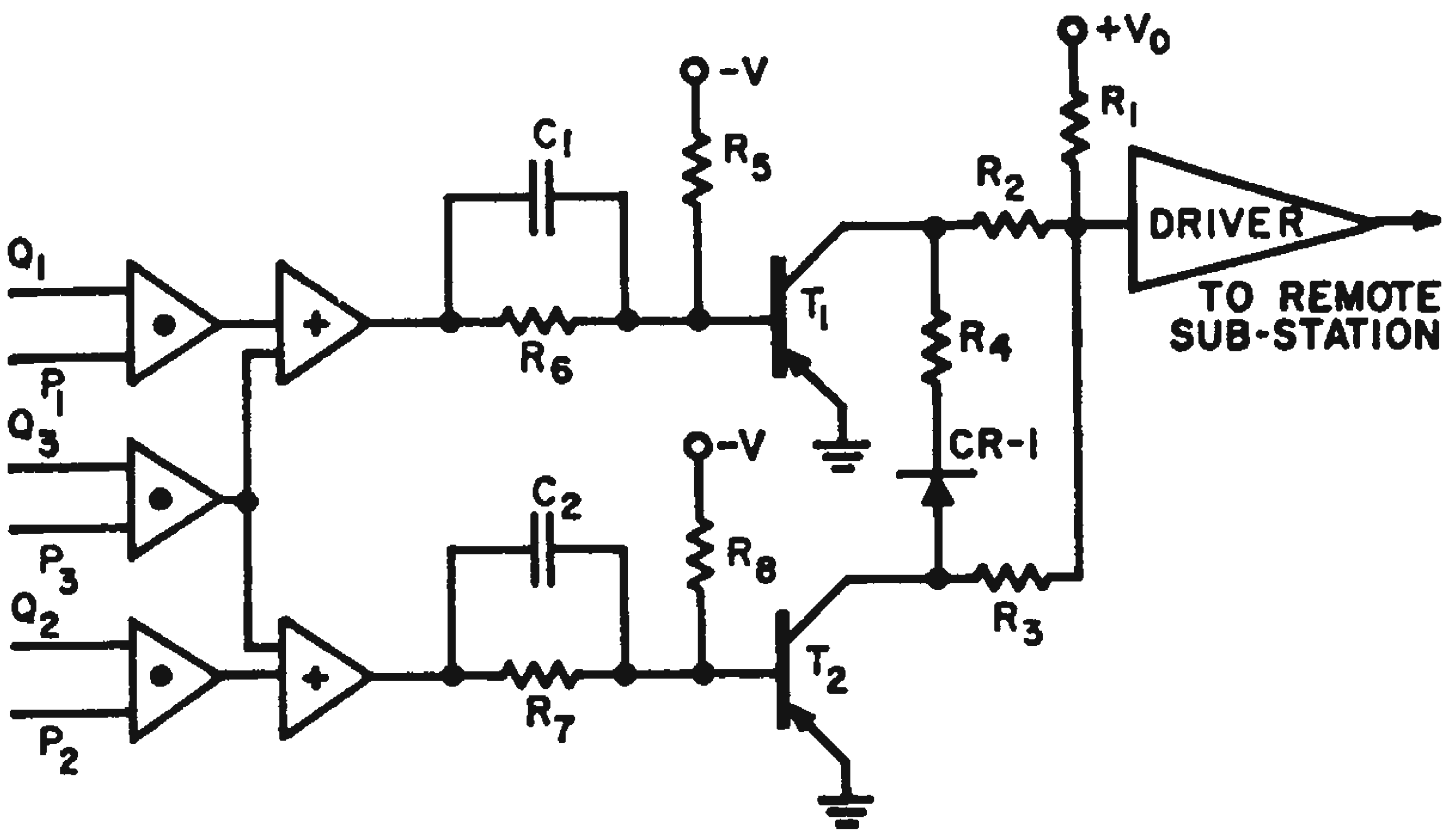

Fig. 1. AND/OR gate multiplexer samples three logical inputs, then codes and transmits them in terms of voltage amplitude.

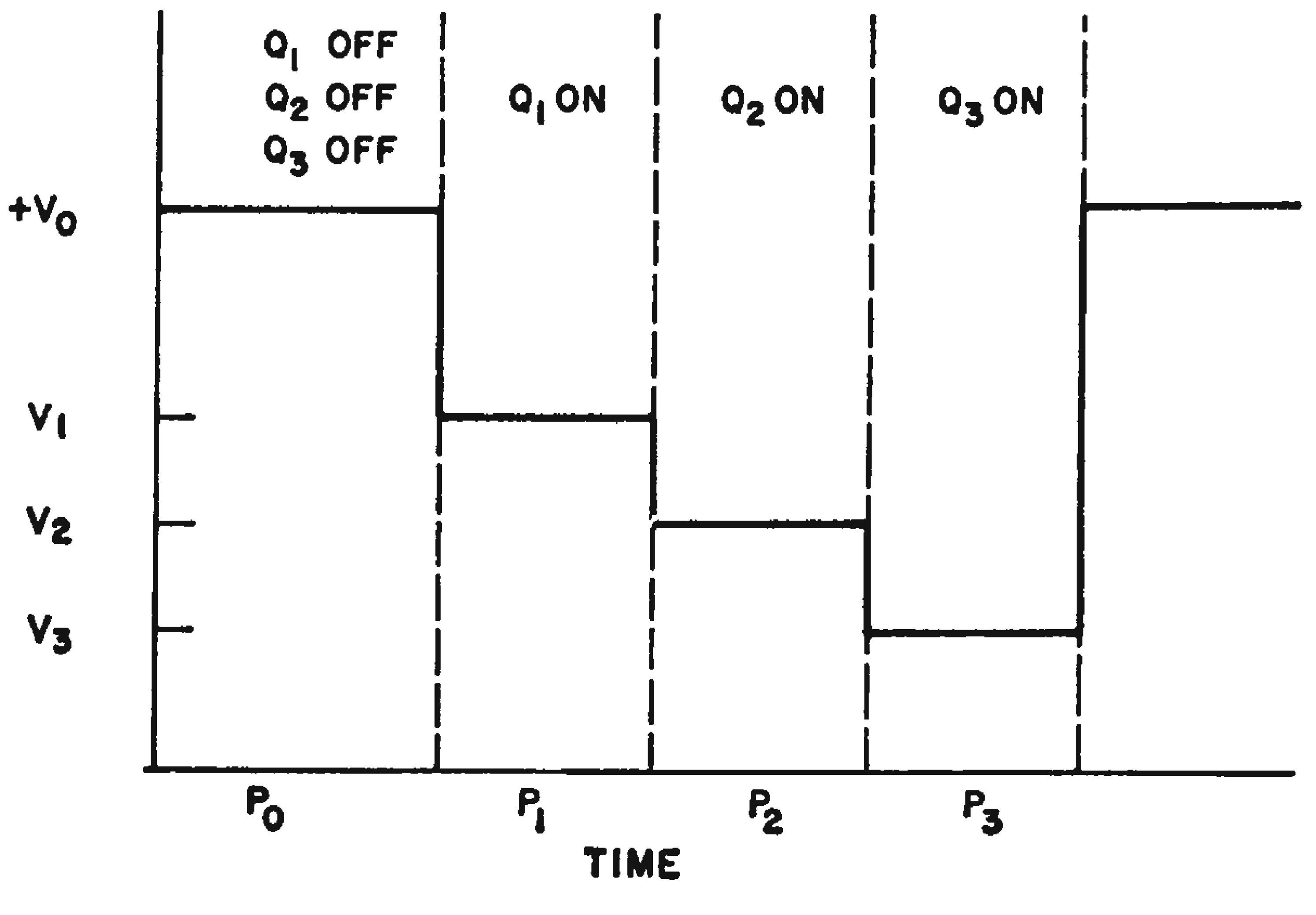

Fig. 2. Output voltage vs logical input for sampling times *P1*, *P2* and *P3*.

Bootstrap Circuit Uses Grid Bias To Obtain Linear Charging

The normal operating bias of a few volts between the cathode and grid of a tube can be used to provide a nearly constant charging current for a capacitor. This will give a linear increase in cathode voltage. The voltage ramp may also be used as such, or a high-resistance relay may be inserted in the cathode circuit to provide a contact operation after a predetermined time.

In operation, switch S_1 is normally closed and the capacitor is not charged. When the switch is opened, the cathode rises a few volts above the grid voltage and a current flows through *R* charging *C*. The tube operates as a cathode follower, and a ramp output is obtained at the cathode. The voltage will continue to rise to the limit set by the tube characteristics. To reset, the switch is closed. A small resistor, R_2, in series with the switch limits the discharge current of the capacitor. *R* and *C* can be adjusted over a wide range to provide different charge timing. However, the current drain should be considerably less than the cathode current.

This circuit also can be operated from an ac plate supply if the cathode is bypassed with a large electrolytic capacitor. In this case the filament can be fed from a series dropping resistor to obtain complete ac line operation.

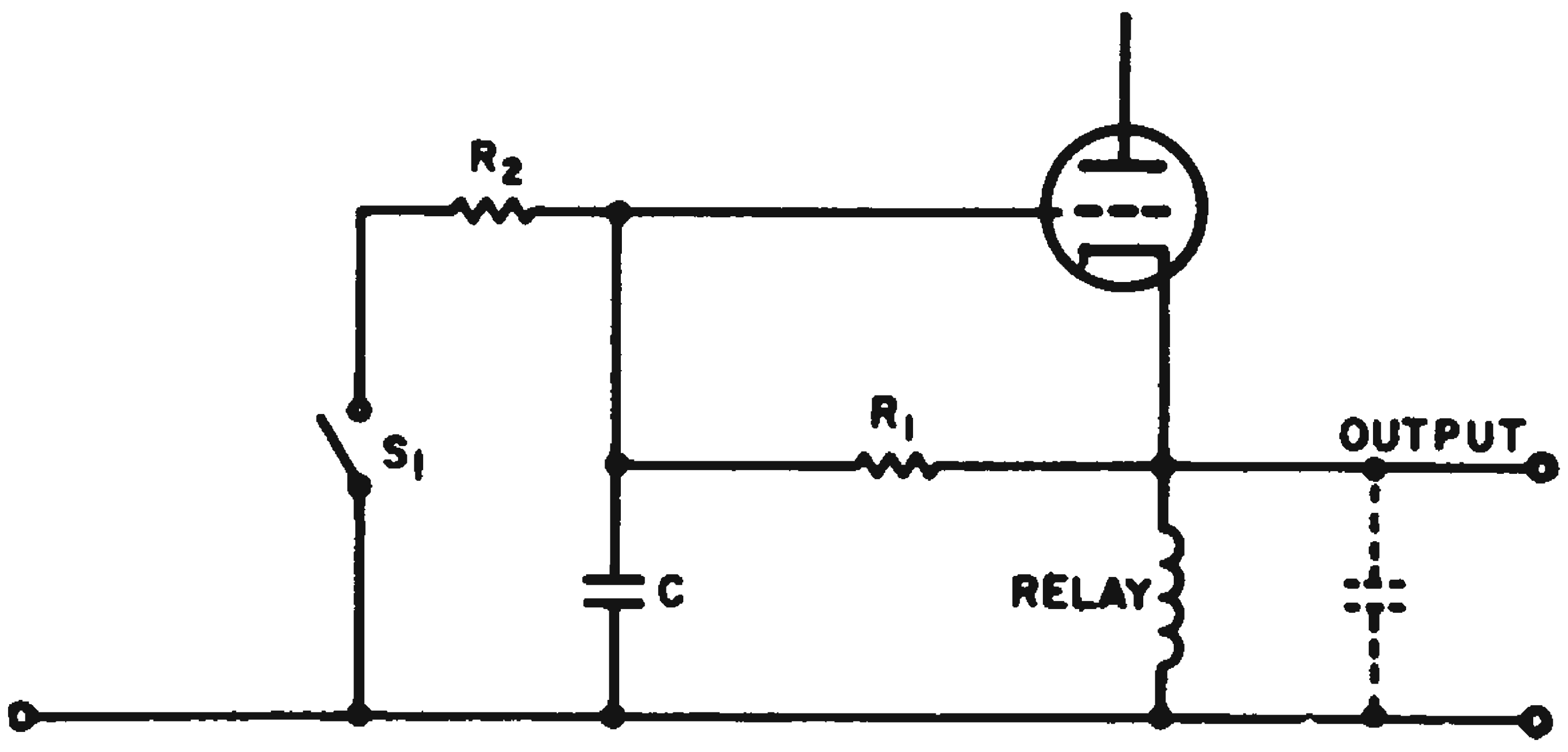

Grid-to-cathode potential difference provides a linear charging current to capacitor.

E. R. Roeschlein, electronic engineer U.S. Naval Avionics Facility, Indianapolis 18, Ind.

SCR Pulse Stretcher Resets After Pulse Train

A simple circuit can detect a 20 μsec, 3-volt pulse either singly or in train. The circuit is self-resetting.

An SCR and a four-layer diode connected as a monostable multivibrator, serve as the pulse stretcher. With the values shown, the relay (or other load) is energized for about 50 msec for a single pulse. For a repetition rate of more than 20 per second, the relay remains energized during the pulse train since the clamping diode holds the relay closed during the off time of the SCR. Within 50 msec after the last pulse in the train, the four-layer diode turns on, the SCR turns off and the relay is deenergized.

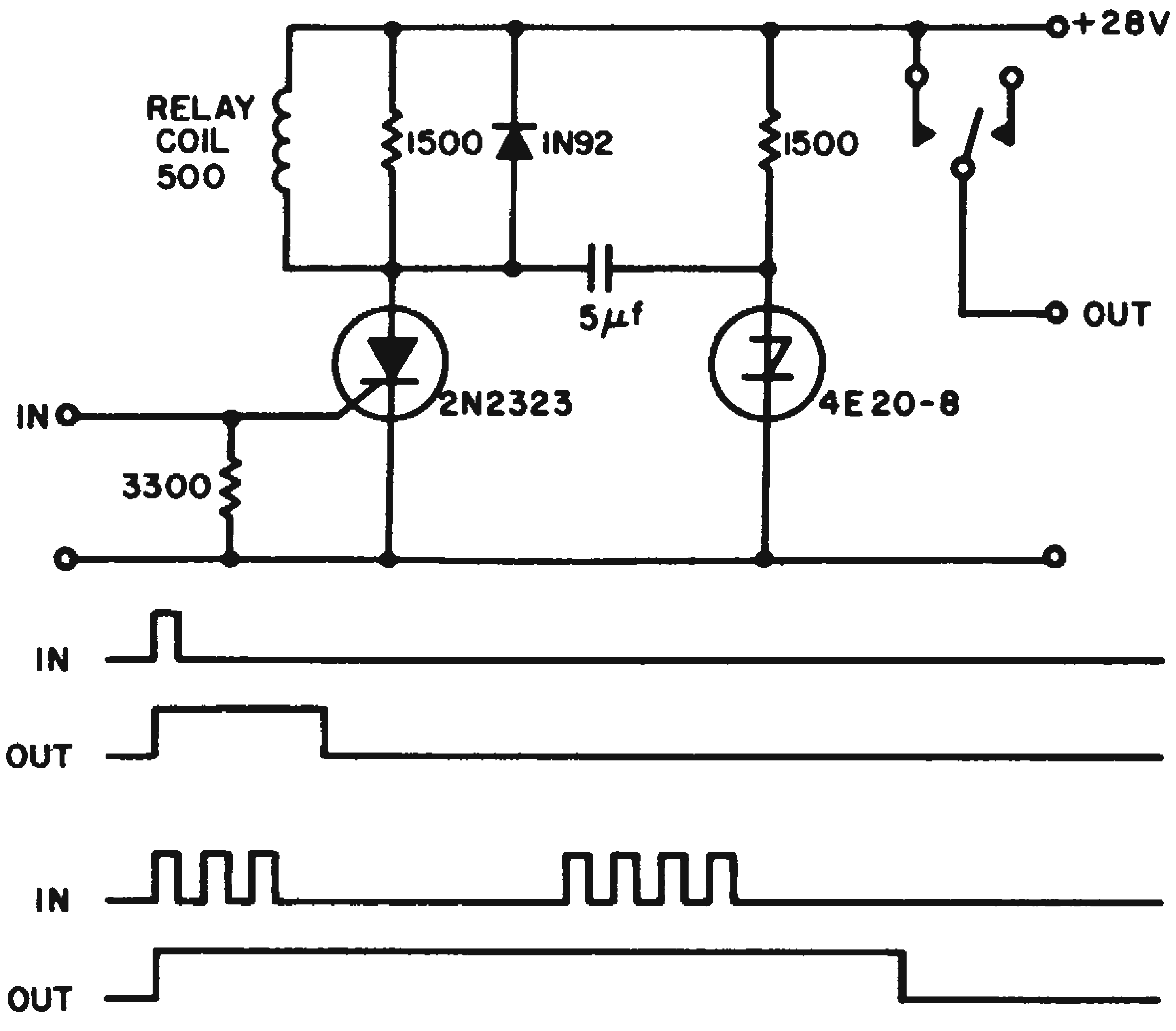

SCR-diode combination detects pulses as short as 20 μsec and is self-resetting.

Andrew Balint, design engineer, Bell & Howell Co., Chicago.

FM Stereo Indicator Uses Minimum of Components

Presence of an fm stereophonic broadcast can be indicated simply and inexpensively in multiplex receiver circuits having a synchronized oscillator.

The oscillator circuit is changed momentarily to a frequency doubler by decreasing the ac feedback to a point where oscillation stops. The oscillator stage is still class-C biased, but now functions as a frequency doubler. The 38-Kc signal from this doubler is detected by a diode and used to give a visual indication on the receiver's existing tuning indicator. In the multiplex circuit shown, the cathode resistor of the oscillator is bypassed by a 1 μf capacitor. The detected 38-Kc signal is fed to the grid of the 1629 electron-eye tube normally used to indicate proper receiver tuning. A push-button is used to bypass the oscillator cathode and switch the eye-tube grid to read the detected 38-Kc signal. Only three additional components and a switch are needed.

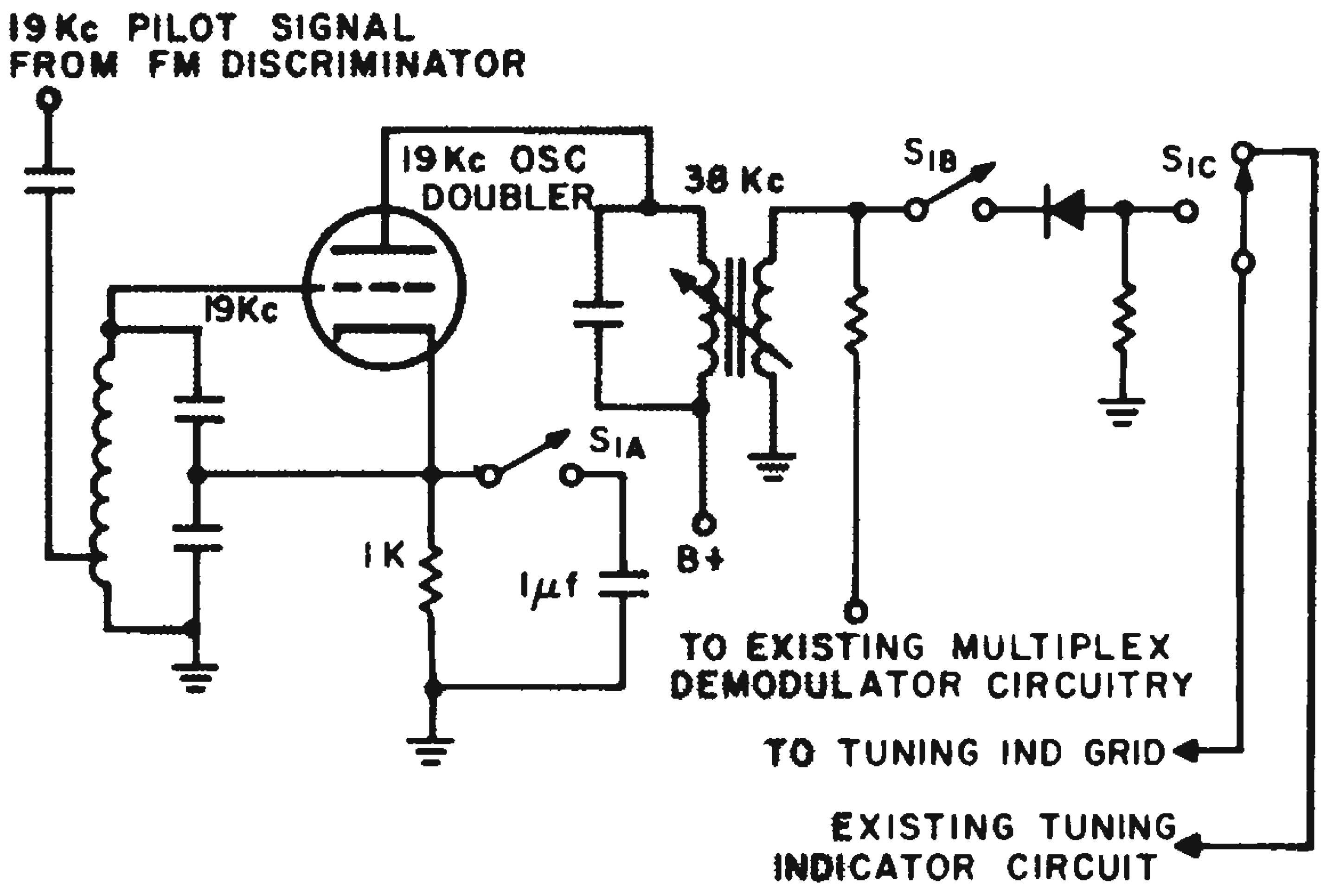

Three added components plus a switch convert fm tuning indicator to show presence of stereo signals.

In operation, the receiver is tuned to a station in the normal manner. Then the stero-test button is depressed. If the station is broadcasting stereophonically, the eye will close. If it is not, the eye will open since no negative voltage is present on the eye-tube grid circuit.

William A. Vogts, project engineer, Pacotronics, Inc., Glendale, N. Y.

Neon Lamp Matrix Stores Information Visually

The neon lamp matrix shown is a memory device for storing informatiion visually. Any number of lamps can be selected simply by pushing the appropriate row and column pushbuttons. The lamps are extinguished by operating the *EXT* pushbutton. The selection method lends itself very readily to automatic operation by relay contacts, stepping relays, and saturated transistors. Also, the matrix can have a wide range of rows and columns.

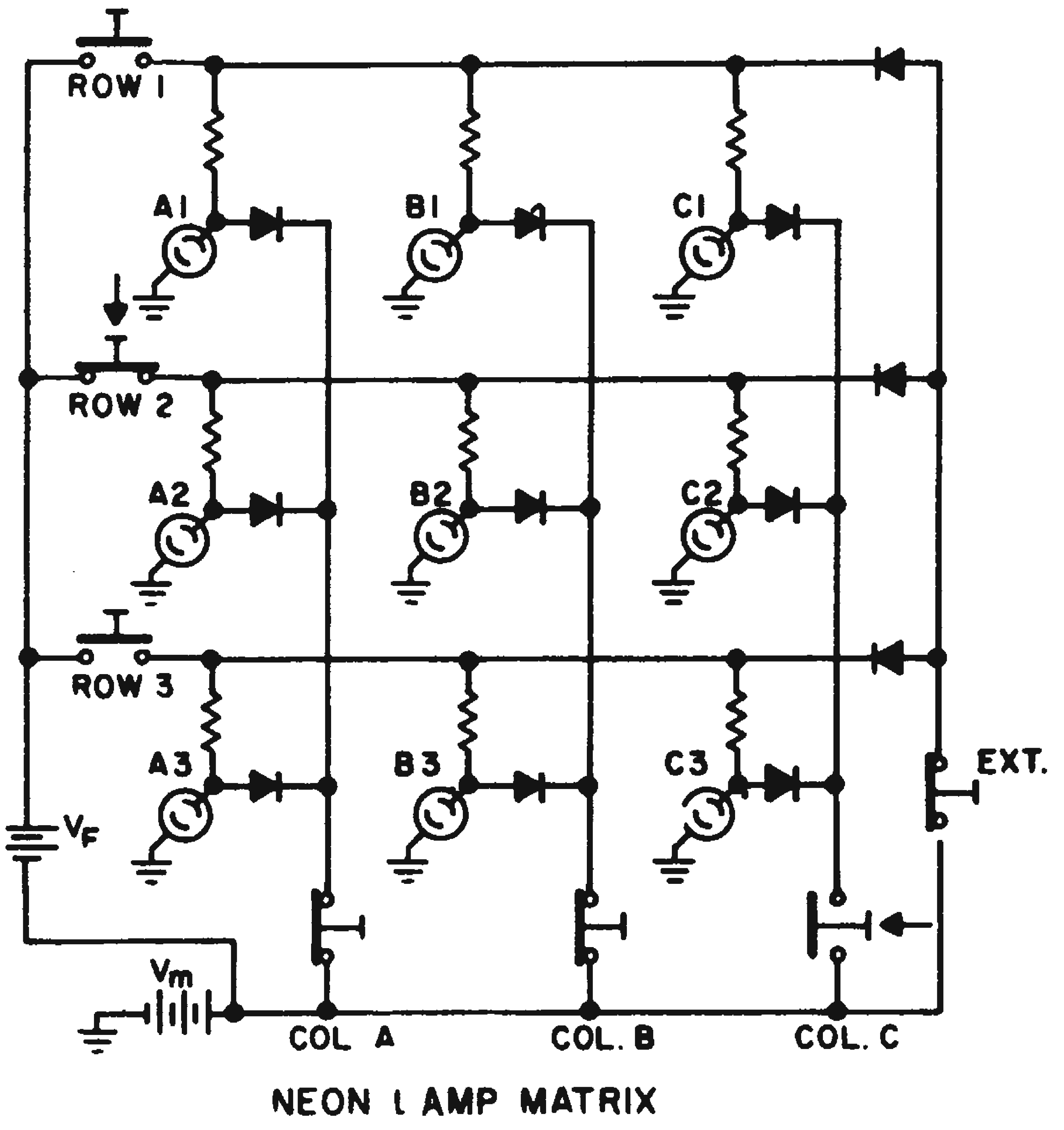

Row and column pushbuttons select desired neon lamp in visual storage device.

The maintenance voltage V_m is large enough to keep an ignited neon lamp on, but is too low to fire it alone. The series addition of V_f is sufficient for firing. A particular lamp is turned on by pressing the corresponding row and column pushbuttons, as shown for lamp C_2. This connects V_f to the resistors of lamps *A2*, *B2* and *C2*. Lamps *A2* and *B2* do not trigger because they are shunted through their diodes to V_m. *C2* is shunted to an open circuit, so it triggers. When the pushbuttons are released, *C2* remains on, supplied by V_m through the *EXT* pushbutton and the series diode.

A. Hemel, Project Engineer, Applied Research Dept., Motorola Inc., Chicago, Ill.

Low Impedance Transistor Circuit Drives Coaxial Line

To preserve the shape of short, fast rise-time pulses transmitted along coaxial line, the impedance of the driver should match the characteristic impedance of the line. The coax driver circuit shown in Fig. 1, a combination of a saturated inverter and an emitter follower, provides an excellent low impedance drive.

With zero volts input, R_1 and R_2 act as a voltage divider to bias T_1 off. With T_1 in the nonconducting state, the current in R_3 causes emitter follower T_2 to conduct, and the output is negative. The output impedance at this time depends on the current gain and the emitter-to-base voltage drop of T_2.

When the input is negative, transistor T_1 conducts and pulls the base of T_2 up to 0.1 v. Transistor T_2 is cut off. Diode D_1 conducts and pulls the output up to near ground. The output impedance in this state is the impedance of the saturated transistor T_1 and the forward biased diode D_1.

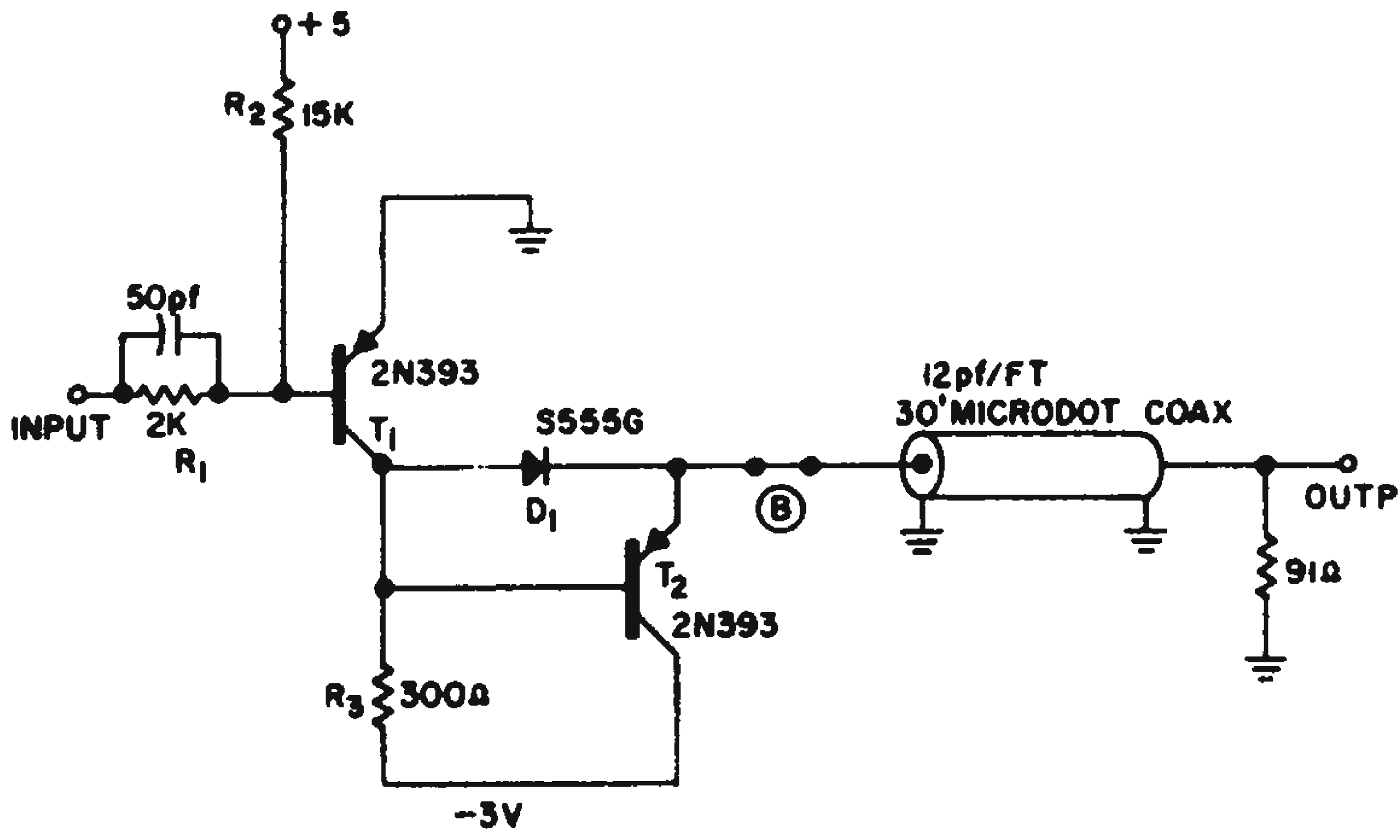

Fig. 1. Driver circuit provides low impedance match to characteristic impedance of coaxial cable.

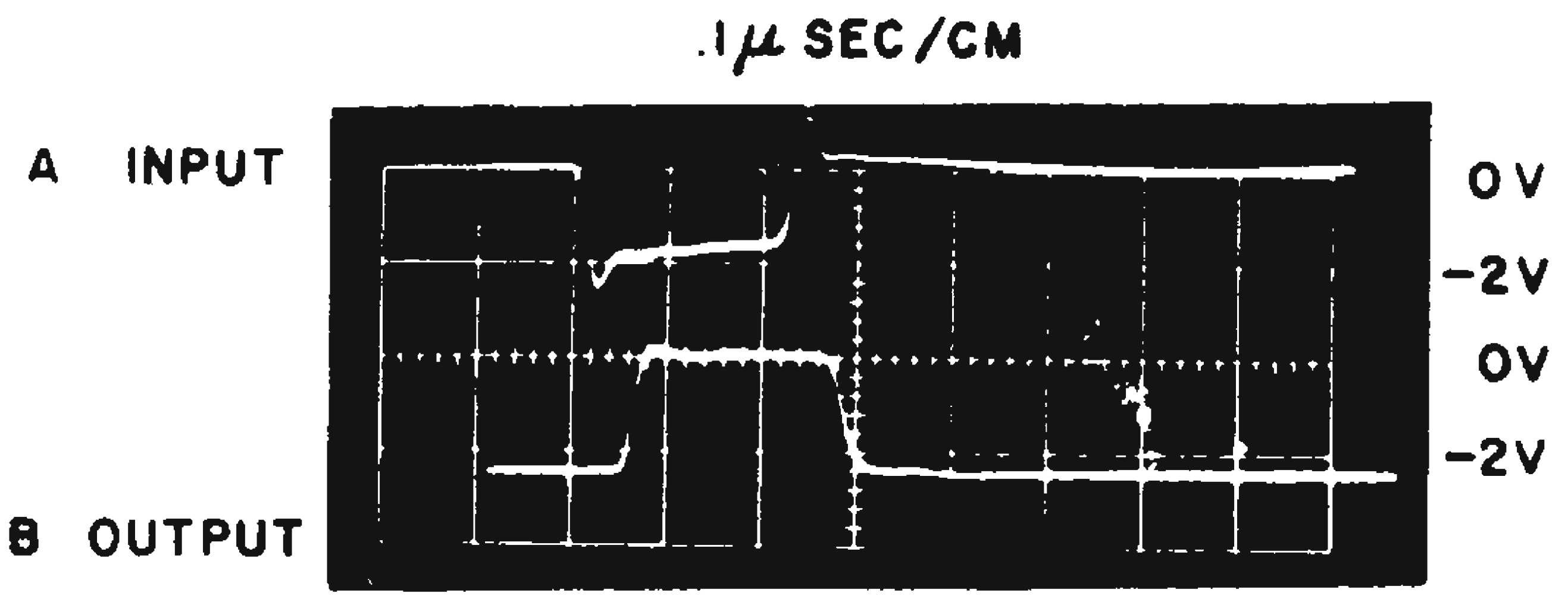

Fig. 2. Inverted output waveshape (b) is slightly delayed but still fast and sharp.

The effect of the drive circuit working into a 30-ft section of Microdot cable is shown in Fig. 2. There is a 22-nsec delay in the inverter, a 4-nsec delay in the emitter follower and 50-nsec delay in the coaxial cable length.

Forrest O. Salter, Applied Mathematics Div., Argonne National Laboratory, Argonne, Ill.

Low-Level Signal Gate Circuit Relies On Diode Conduction Potential

A null bucking configuration and diode clamping circuit provide a gate which will not pass low-level signals or noise, but which will pass higher-level signals virtually undisturbed. Since this method does not use vacuum tubes, or additional batteries, it is especially useful for transistor applications.

The circuit operation is illustrated in Fig. 1. The signal is impressed on the transformer primary. The secondary windings are bucking each other and the diode acts to set a clamping action across the winding 2. Resistor *R* develops the clamping voltage across the diode and limits the current flow through it. Low-level signals, or noise, below the diode conducting voltage cause no clamping action. The signal potentials generated in coils 2 and 3 cancel so that no potential difference appears at the load. As the signal level is increased above the level of the diode forward voltage drop, diode current flows through resistor *R* on the positive segment of the signal. This causes an unbalance in signal between transformer coils 2 and 3 and a half wave rectified signal appears at the load, proportional to the signal amplitude. A sine-wave load signal can be obtained by placing a second diode in parallel, but reversed, across the diode shown. The clamping potential can be varied by selection of the type of diode, by adding diodes in series or, if an exact value is required, by the addition of a potentiometer and battery in series with the diode.

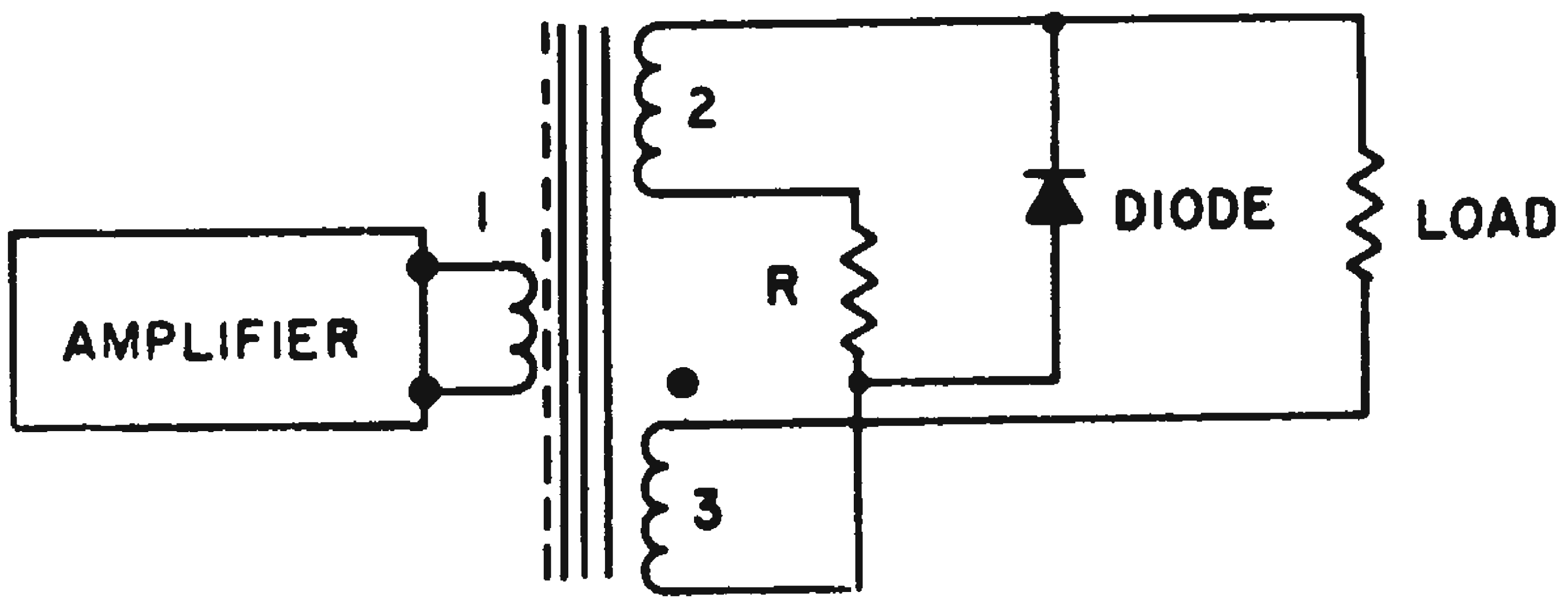

Fig. 1. Signals, or noise, below the diode conduction potential will not be passed to the load because of the bucking action of the transformer secondary windings.

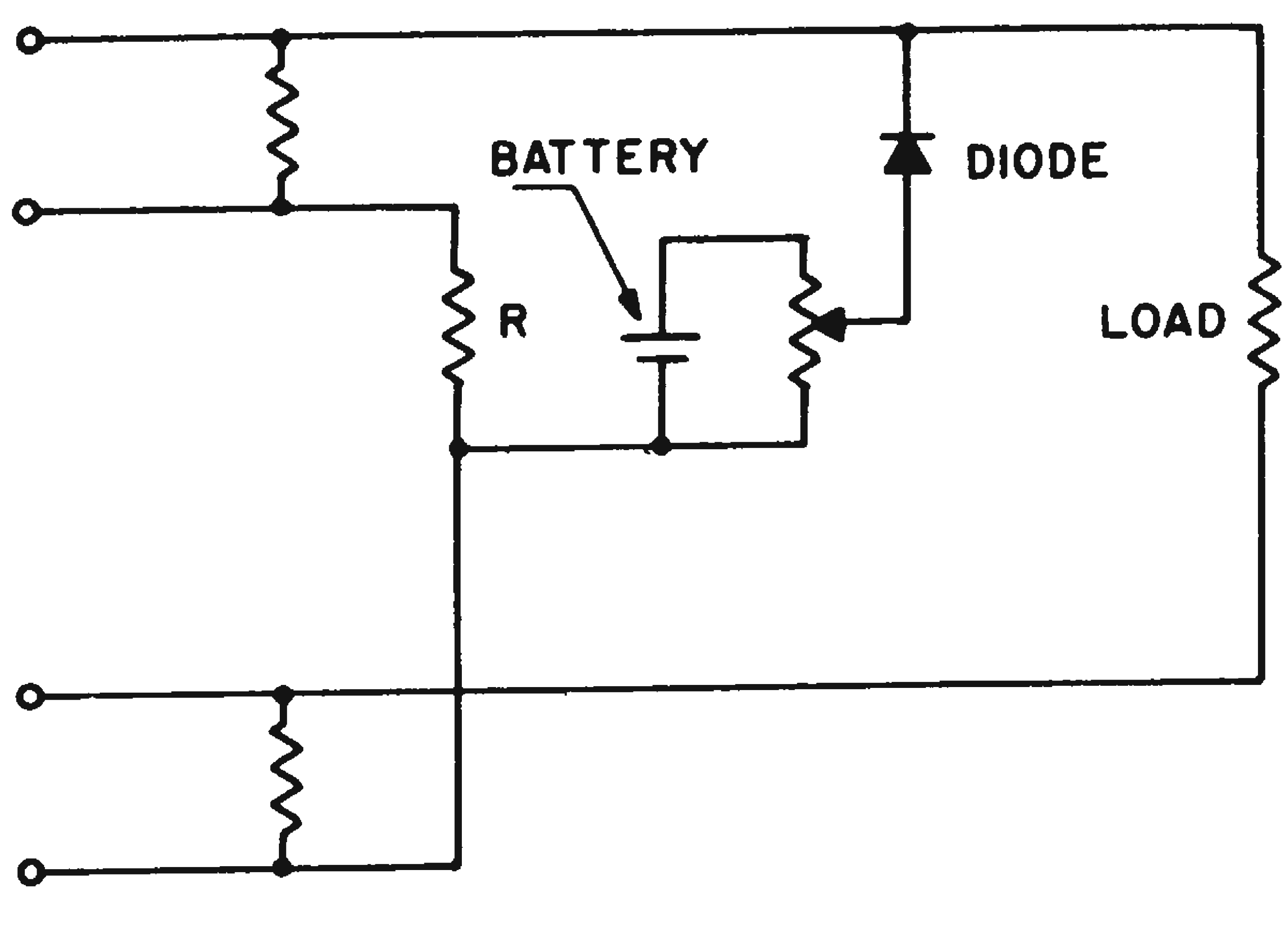

Fig. 2. Low-level gating can be obtained with resistive coupling and a battery to vary the clamping potential.

Fig. 2 illustrates a biasing circuit using resistive coupling. Two clamping diodes and potentials as described will allow a satisfactory sine-wave output, although the cross-over section of the sine-wave will be missing.

Metallic diodes are recommended in this circuit but vacuum-tube diodes will function if the Edison current through resistor *R* is balanced out. For optimum performance, resistor *R* should have the same impedance as the secondary winding. However the resistance value is not critical. Electrostatic shielding between windings is desirable.

The complete details of these circuits can be obtained by referring to patent number 2,867,735 issued January 6, 1959.

Edwin N. Kaufman, Litton Industries, Beverly Hills, Calif.

Transistorized Neon Drivers Eliminate Reverse Leakage Glow

Transistorized neon drivers, such as the one shown in Fig. 1, are often used for visual indication of a flip-flop's state. Unfortunately, the reverse leakage current may be great enough to cause the neon lamp to glow even though the transistor is in the "off" (reset) state.

To reduce the effect of I_{co}, a resistor can be

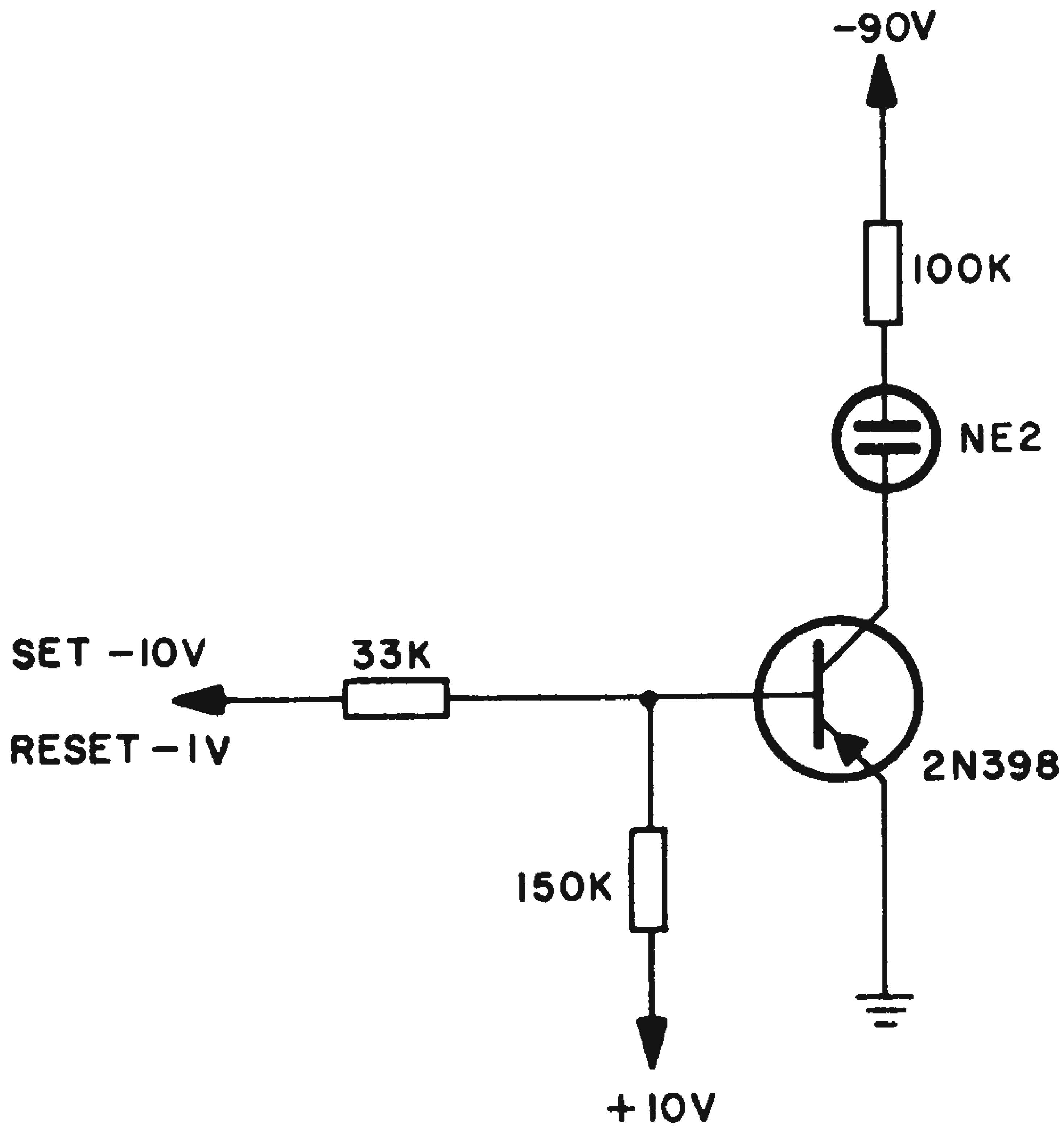

Fig. 1. Basic neon driver.

connected in parallel with the lamp and its load resistor. This forms a current divider and allows most of the leakage current to flow in the parallel resistor. This method is quite effective at room temperatures. However, I_{co} doubles for every 10 deg C temperature rise. At higher temperatures, enough reverse leakage current will flow through the lamp to cause it to glow quite brightly.

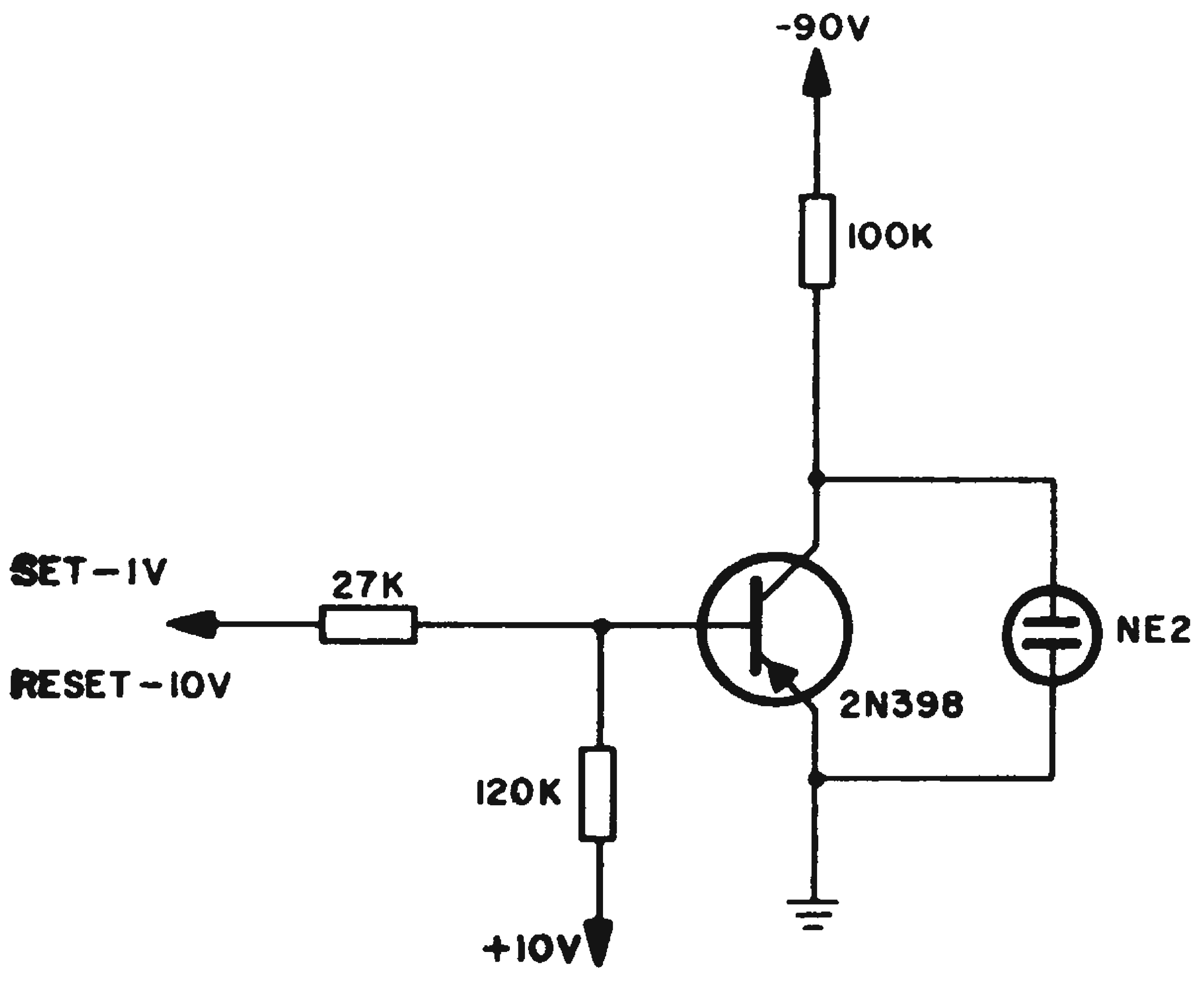

Fig. 2. A neon driver circuit which is not critical to I_{co}.

The circuit of Fig. 2 was designed for operation at elevated temperatures. The base of *Q1* is connected to the opposite side of the flip-flop so the input voltage is —10 v when reset, —1 v when set. *Q1* conducts when the flip-flop is reset, dropping the voltage across the neon to less than a volt and holding it dark. In the set state *Q1* is held non-conducting and current flows through the neon, lighting it brightly. Leakage currents, I_{co}, up to 200 μa may be tolerated with no degradation of performance.

Robert M. Walker, Development Engineer, Lawrence Radiation Laboratory, Livermore, Calif.

Summing Network Varies AC-DC Components of Input Saw Tooth

The ac and dc components of a linear saw-tooth voltage wave can be varied by using a purely resistive summing network. Shown in Fig. 1, the network has fed into it the sawtooth voltage signal, V_s, the negative of the signal's dc level, E_4, and a dc voltage which sets the new dc level, E_2. Since no coupling capacitors are present, the circuit can be used for waveforms with very low repetition rates. Also, use of a summing network will bring about attenuation, but will cause no interaction of controls.

Assuming that the potentiometers used to vary voltages are zero impedance sources, the equivalent circuit of the network is as shown in Fig. 2. Summing the currents at the output junction:

$$\frac{E_1-E_o}{R_1}+\frac{E_2-F_o}{R_2}+\frac{E_3-E_o}{R_3}+\frac{V_L-E_o}{R_L}=0 \quad (1)$$

In terms of the output voltage, E_o, this becomes:

$$E_o=\frac{\frac{E_1}{R_1}+\frac{E_2}{R_2}+\frac{E_3}{R_3}+\frac{V_L}{R_L}}{\frac{1}{R_1}+\frac{1}{R_2}+\frac{1}{R_3}+\frac{1}{R_L}} \quad (2)$$

The voltages E_1 and E_3 are set by a dual potentiometer. They are equal to some fraction X of the total voltage across them. That is:

$$E_1 = X(V_s - V_{cc}) \quad E_3 = X(E_4 + V_{cc}) \quad (3)$$

Substituting Eq. 3 into Eq. 2 yields:

$$E_o=\frac{\frac{X(V_s-V_{cc})}{R_1}+\frac{X(E_4+V_{cc})}{R_3}+\frac{E_2}{R_2}+\frac{V_L}{R_L}}{\frac{1}{R_1}+\frac{1}{R_2}+\frac{1}{R_3}+\frac{1}{R_L}} \quad (4)$$

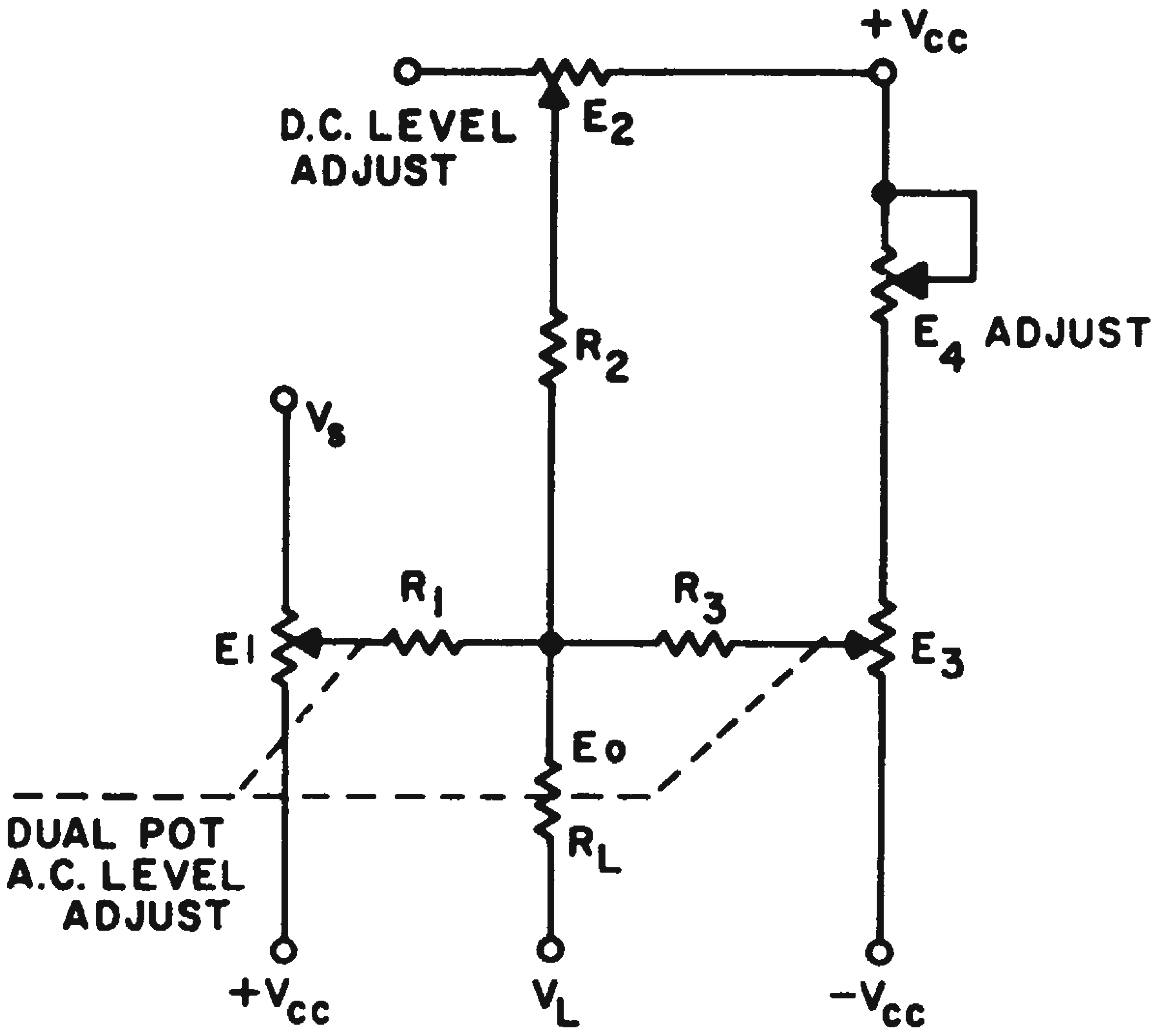

Fig. 1. Resistive summing network allows the ac and dc components of a saw-tooth voltage wave to be varied separately.

It is readily seen that if $R_1 = R_3 = R$, the effects of V_{cc} is eliminated from the equation. This value R is substituted into Eq. 4 and the signal, voltage, V_s is replaced with its ac and dc components ($V_s = V_{ac} + V_{dc}$):

$$E_o=\frac{\frac{X(V_{ac}+V_{dc})}{R}+\frac{X(E_4)}{R}+\frac{E_2}{R_2}+\frac{V_L}{R_L}}{\frac{2}{R}+\frac{1}{R_2}+\frac{1}{R_L}} \quad (5)$$

From this last relation it becomes apparent that if E_4 is set equal to the negative of V_{dc}, the dc component of the signal will also be eliminated. Substituting $E_4 = -V_{dc}$:

$$E_o = \frac{\frac{XV_{ac}}{R} + \frac{E_2}{R_2} + \frac{V_L}{R_L}}{\frac{2}{R} + \frac{1}{R_2} + \frac{1}{R_L}} \tag{6}$$

If, furthermore, R_2 is made equal to R, this equation simplifies to:

$$E_o = \frac{\frac{X}{R} V_{ac} + \frac{E_2}{R} + \frac{V_L}{R_L}}{\frac{3}{R} + \frac{1}{R_L}} \tag{7}$$

$$E_o = \frac{XV_{ac}}{3 + \frac{R}{R_L}} + \frac{E_2}{3 + \frac{R}{R_L}} + \frac{V_L}{1 + \frac{3R_L}{R}} \tag{8}$$

Assuming that $R_L > R$ and $V_L \approx 0$ yields the simple relation:

$$E_o \approx \frac{X}{3} V_{ac} + \frac{E_2}{3} \tag{9}$$

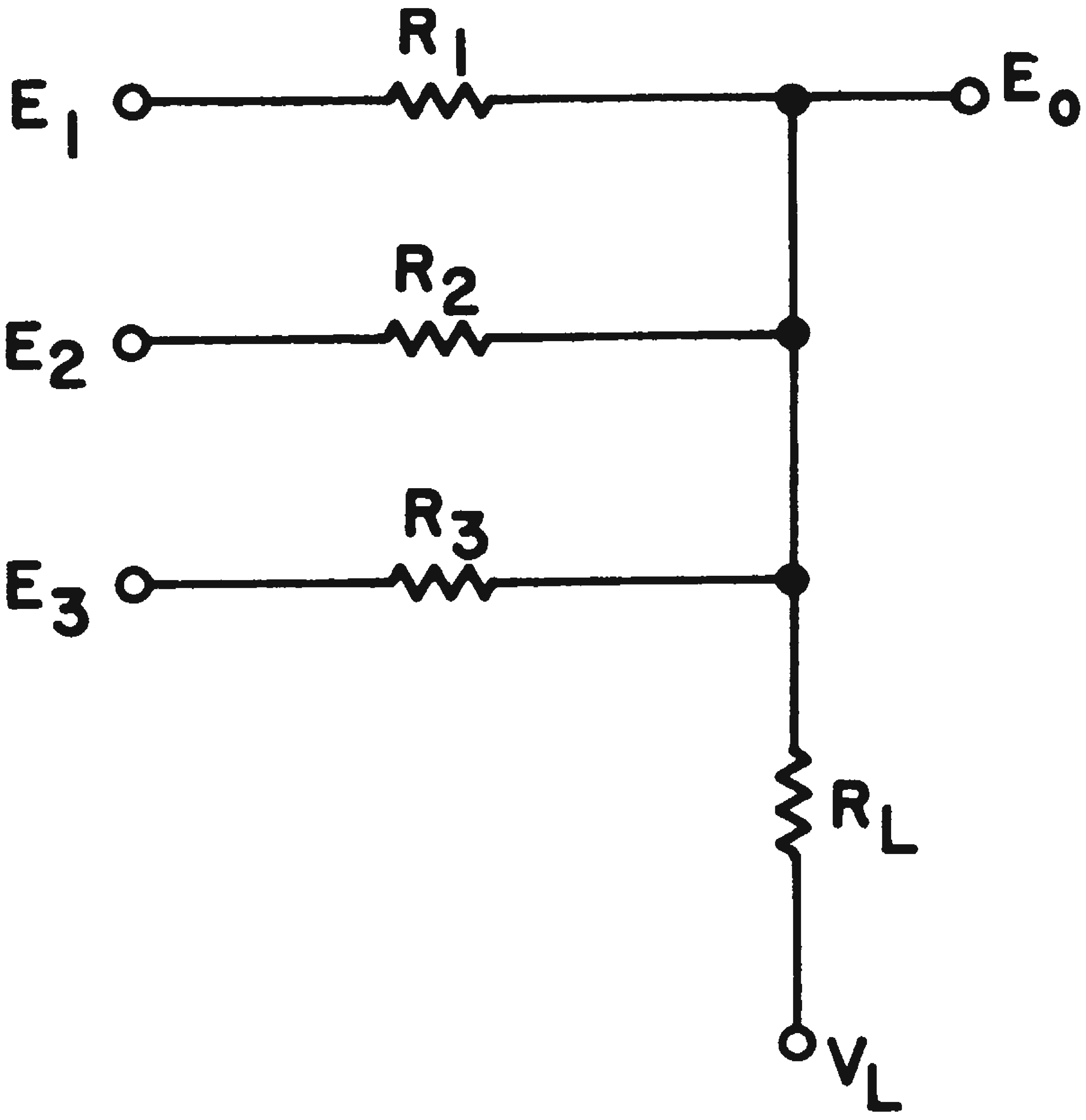

Fig. 2. Equivalent circuit of the summing network assumes that E_1, E_2, and E_3 are supplied by low-impedance sources.

The ac and dc components of the input saw tooth are directly and independently variable.

R. L. Knox, Associate Engineer, Stromberg-Carlson Co., Rochester, N.Y.

Pulse Transformer Helps Provide Two-Input, Exclusive-Or Logic

A high-speed, two-input, Exclusive-Or gate was needed which would work with pulse widths of about 0.2 μsec, and give good rise and fall times. It had to be a reliable, small and simple system.

The circuit shown, using a tiny pulse transformer, performs the Exclusive-Or logic usually indicated by: AB′ + A′B. With negative pulses at either *A* or *B* (the other terminal at ground) there will be a negative pulse at output *C*. If there are negative pulses at *A* and *B* simultaneously, there will be no output at *C* because of the flux cancellation between the two input windings.

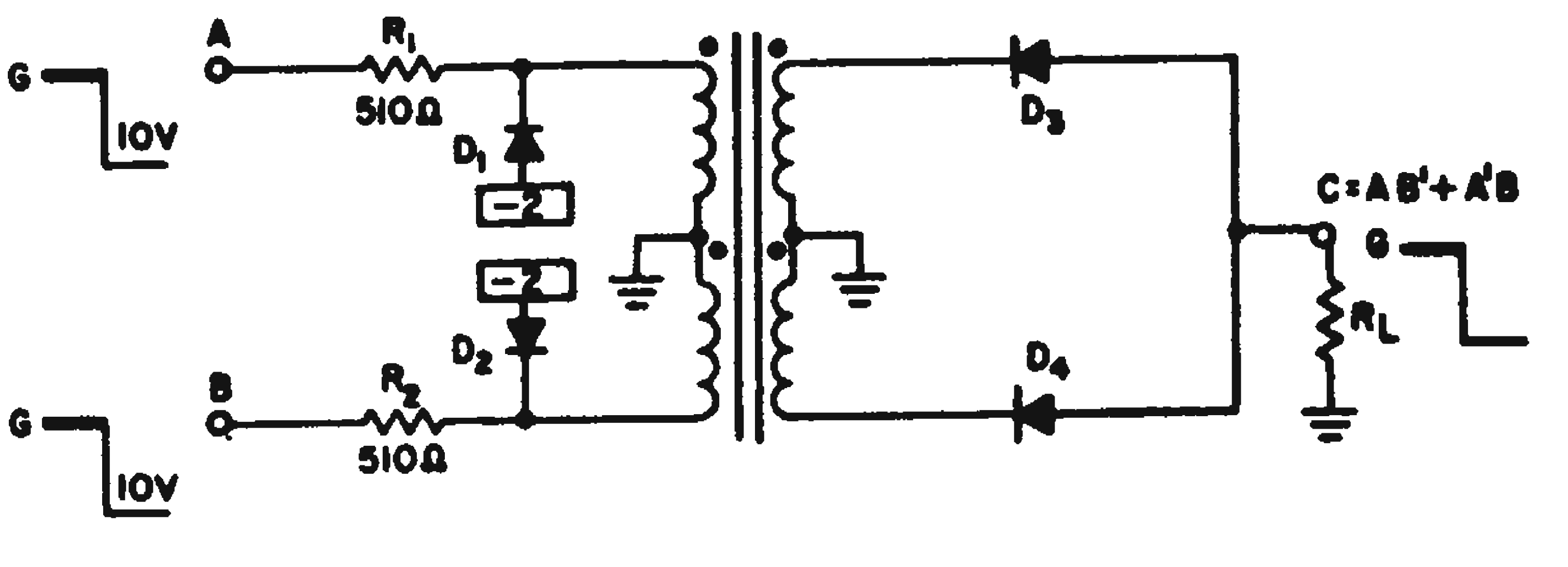

DIODES D_1–D_4=GERMANIUM HI-SPEED
T=PULSE TRANSFORMER 1:1:1:1

The circuit performs the Exclusive-Or logic of AB′ + A′B.

Diodes D_1 and D_2 clamp the input pulses to the same level. This insures good flux cancellation when both inputs are present.

Jack Shirman, Supervisory Engineer, Stromberg-Carlson, Rochester, N.Y.

Camera Lens and Solar Cell Make Pulse Generator

A production test set-up called for a pulse generator with an adjustable pulse width and amplitude. Using readily available equipment, the arrangement shown in the figure was used with great success.

A metal tube, closed at one end and housing a small pilot bulb, was slipped over a camera lens. A solar cell was mounted inside the camera, facing the lens. When the shutter is snapped, light passes

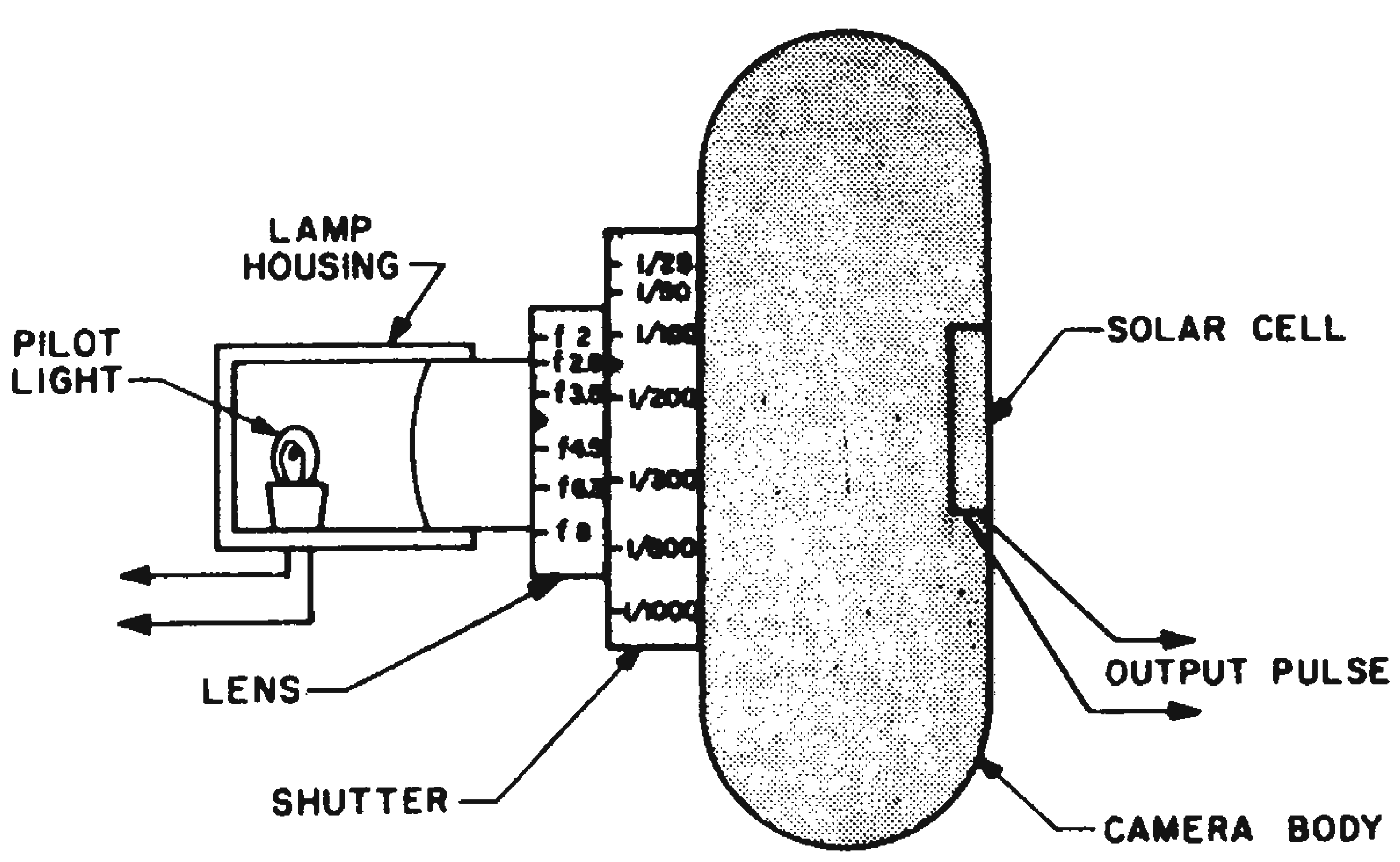

through the lens onto the solar cell, generating a pulse whose duration and intensity are determined by the shutter and lens settings.

Joseph Leeb, Project Engineer, Bulova Watch Co., Jackson Heights, N. Y.

Reduce Delay Time In Binary Counters

Standard binary counters consist of a series of flip-flops, each triggered by the output of the binary which precedes it. If the flip-flops *1* through *4*, Fig. 1, have the count 15 (1111), then at the next input trigger pulse these flip-flops are reset to zero in consecutive order, and flip-flop *5* is set to one. Note that flip-flop *5* is triggered after the propagation delay time through the previous flip-flops.

To offset or reduce this delay time, the following technique considerably reduces the delay to flip-flop *5*. Any flip-flop in a binary counter undergoes a change only if all the previous flip-flops change from one to zero states. Therefore at the count of 16, flip-flops *1* through *4* undergo a one to zero change. By introducing an "AND" gate which senses the outputs of the first four flip-flops, at the count of 16, the input trigger pulse to the binary chain triggers flip-flop *5* along with flip-flop *1*. This reduces the propagation delay time through the flip-flops and synchronizes flip-flops *1* and *5*.

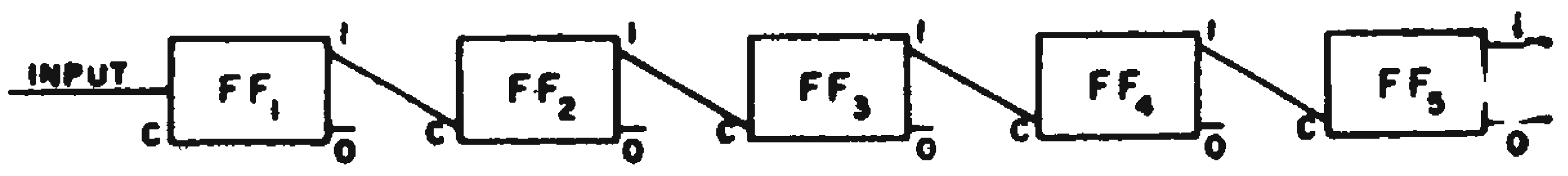

Fig. 1. Flip-flop *5* is triggered only after the first four flip-flops have been reset from 1 to zero.

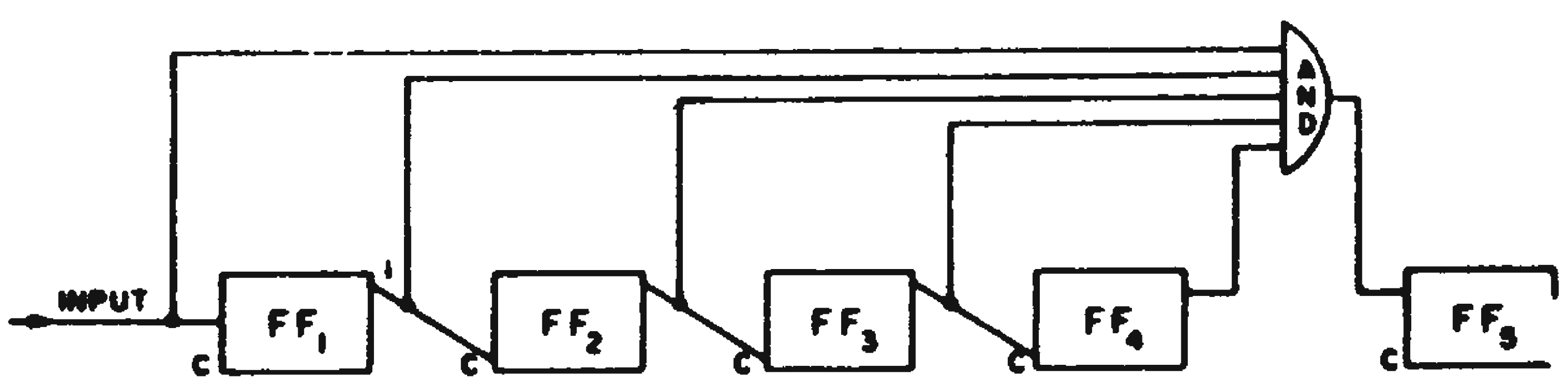

Fig. 2. The "AND" gate senses the outputs of the first four flip-flops. At the count of 16, both flip-flops *1* and *5* are triggered by the input pulse.

Reuben Wasserman, Hermes Electronics Co., Cambridge, Mass.

Thyratron Delays Digital Clock Pulse

A digital data recording system made use of motor generated clock pulses to advance a stepping switch. While data was actually being recorded, any clock pulse which might appear was not to be passed on to the switch. The circuit shown allows the stepping switch to advance one step per clock motor revolution, but delays its advance until a recording interval is completed.

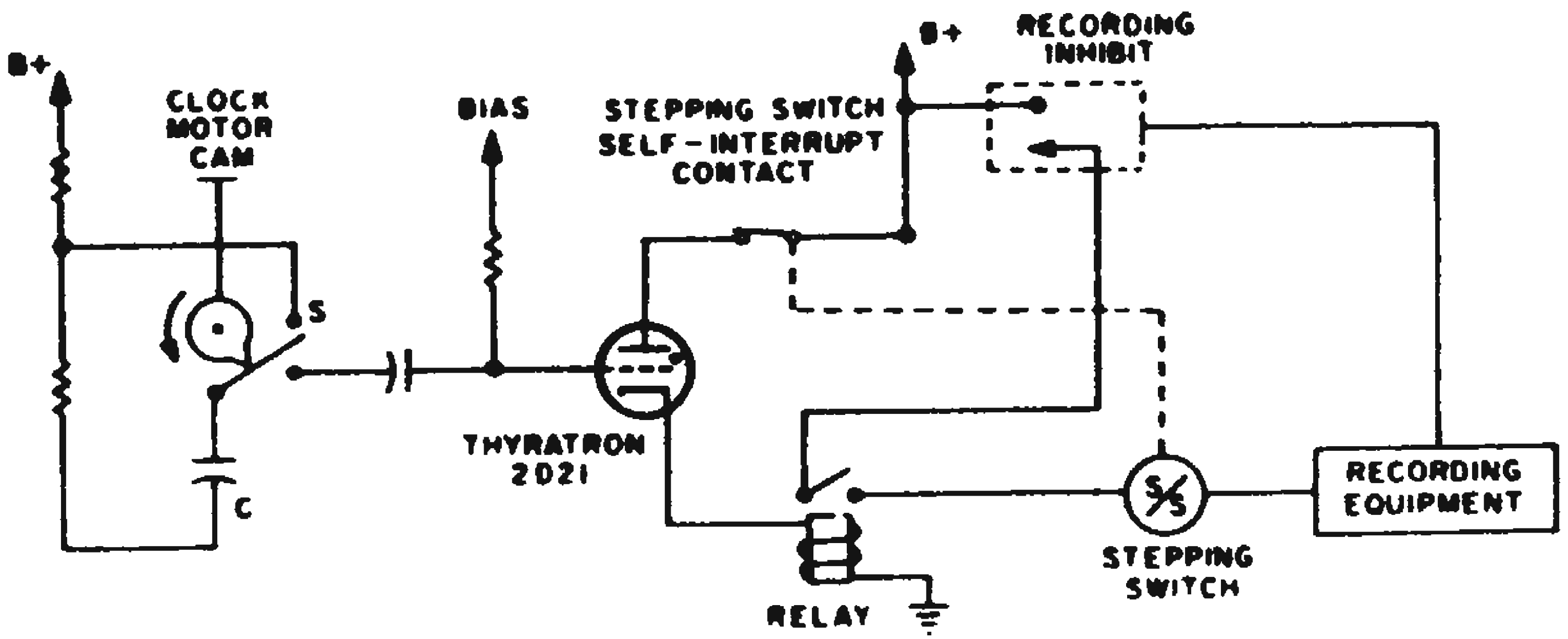

When the clock motor cam closes switch *S*, the charged capacitor *C* discharges and fires the cutoff thyratron. Firing the thyratron energizes the relay. When data is not being recorded, B+ is fed through the closed recording-inhibit contacts (activated by other circuitry), but the closed relay contacts, to the stepping switch magnet. The energized stepping switch opens the self-interrupt contacts, extinguishing the thyratron and resetting the relay. Thus, for every clock pulse, the stepping switch is moved one position.

While data is being recorded, the recording-inhibit contacts are opened. If a clock pulse then appears, the thyratron continues to conduct until the recording cycle is completed. When the recording-inhibit contacts close, the stepping switch will advance one step. In effect, the clock pulse has been delayed for the remaining interval of the recording cycle.

The circuit is reliable enough to maintain the clock to the last whole digit of time, provided the recording interval is less than the clock motor period.

Joseph Piskor, Research Engineer, United Aircraft Research, Hartford, Conn.

Biased Emitter Follower Limits Pulse Amplitude

In transistor pulse circuits, pulse amplitude limiting is usually obtained with biased clipping diodes. However, this can also be done by applying the desired limiting voltage to the collector of an emitter follower. This method is very convenient, since an emitter follower stage is often included in a complete transistorized pulse circuit design.

A conventional emitter follower is shown in Fig. 1. The collector voltage is usually the same as that supplied to the previous stages. The input voltage swing is always less than, and the output voltage swing can never be greater than, the collector voltage. Therefore, to clip or limit the output pulses at a desired level, it is only necessary to reduce the collector voltage accordingly. This is shown in Fig. 2.

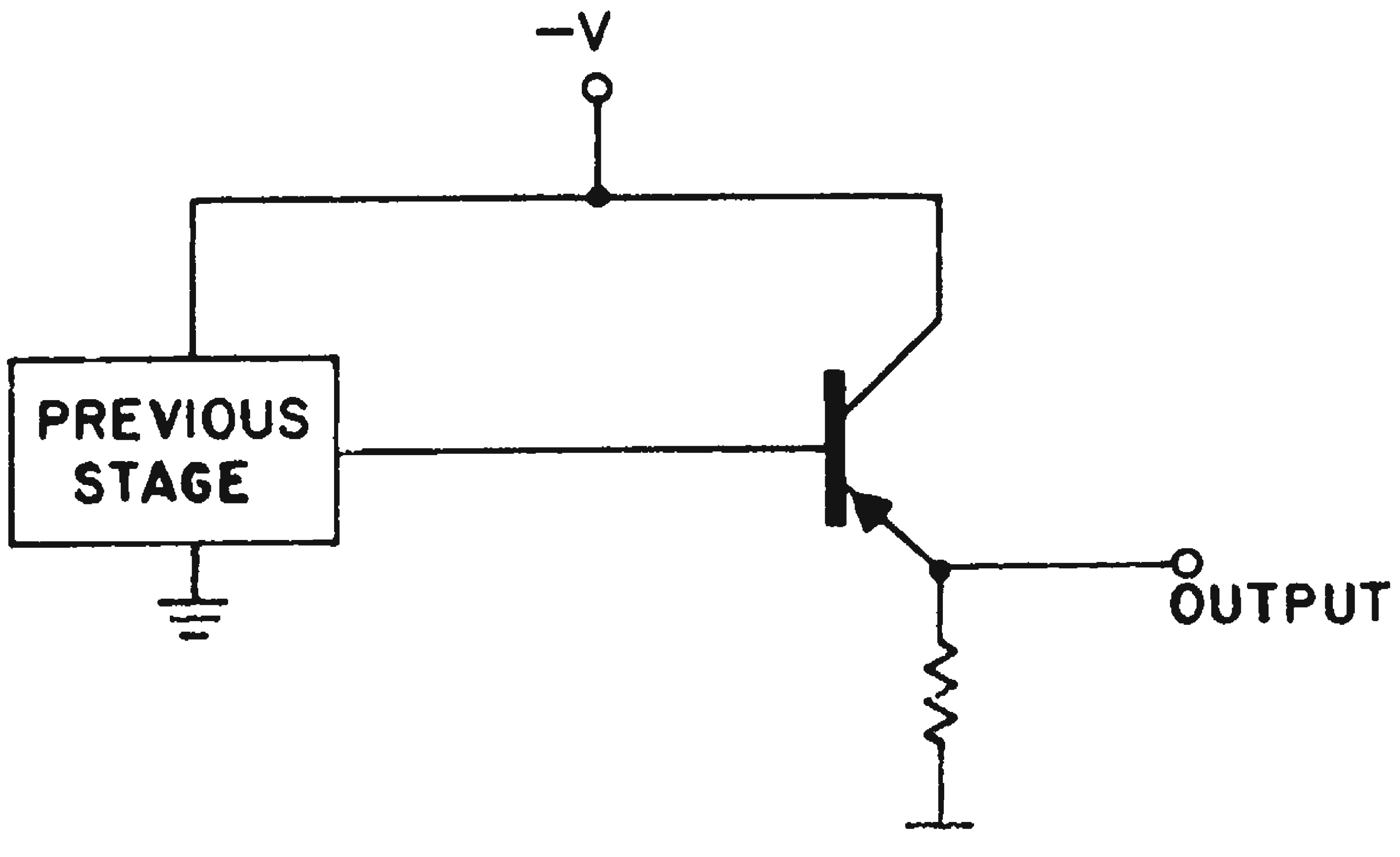

Fig. 1. Conventional emitter follower.

For laboratory work, a potentiometer can be used to set the desired limiting voltage value. Once the optimum resistance ratio is determined, two fixed series resistors can be used as the voltage divider. The output pulse level will be approximately equal to the collector bias voltage. Thus, pulse amplitude limiting is obtained by using only two additional resistors with an existing emitter follower.

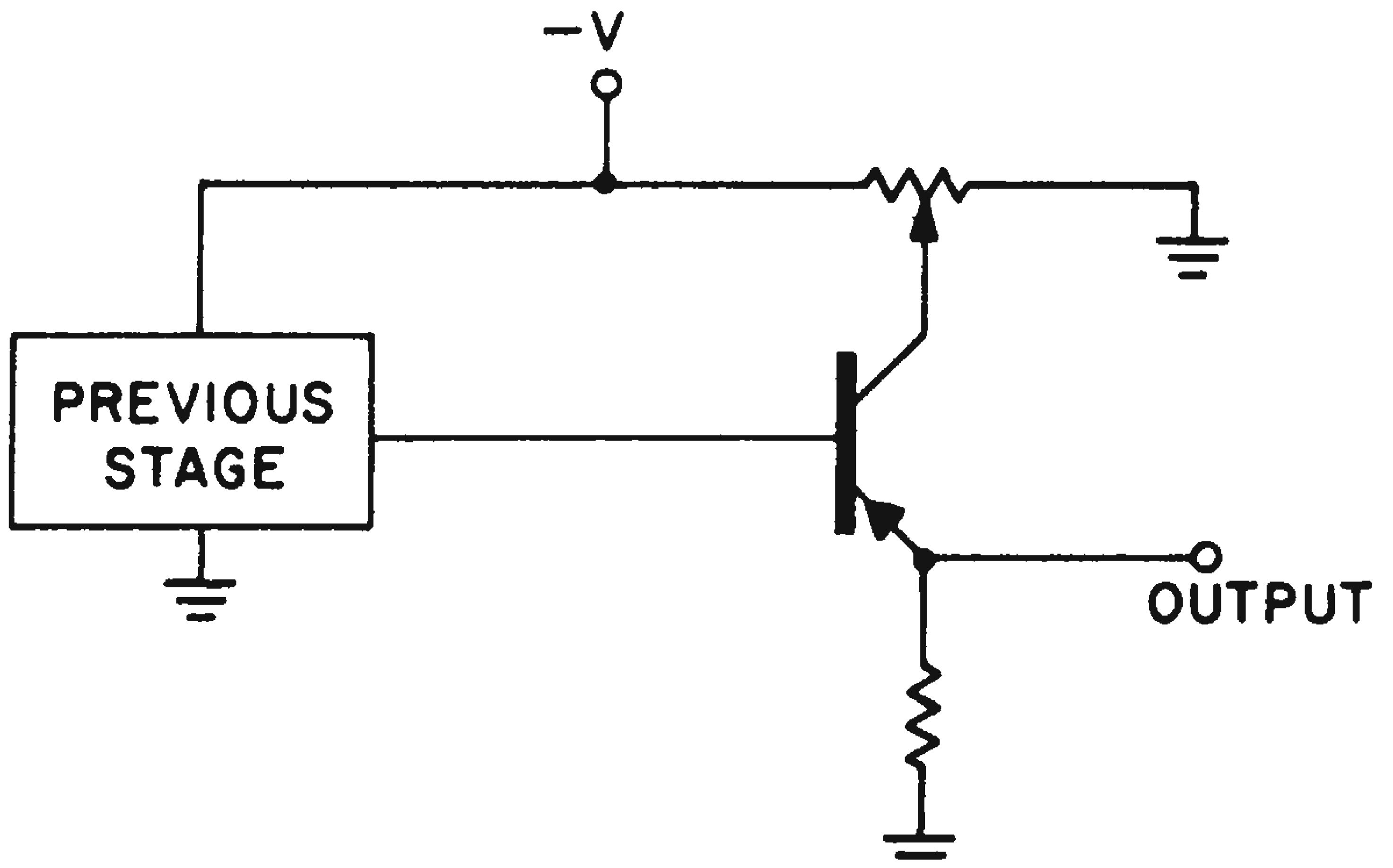

Fig. 2. Pulse amplitude limiting is obtained by applying the desired limit voltage to emitter follower collector.

William B. Turner, Senior Engineer, Fairchild Astrionics Div., Fairchild Engine & Airplane Corp., Long Island, N. Y.

High-Speed Pulse-Stretcher Depends Upon Delay Line Time

An accurate, high-speed pulse-stretcher was required of which output pulse width could be accurately controlled and would be independent of the width of the input pulse. Due to the input pulse's high duty cycle (50 per cent) one-shot and blocking oscillators could not be used because of their long recovery time.

The pulse-stretching circuit devised uses a high-speed mesa transistor flip-flop. An LC delay line stretches the pulse to any length provided it is less than the total square-wave input. The length of the output pulse is a function only of the delay line. Since the length of delay can be made accurate to ±1 per cent, the output pulse will be equally accurate.

The figure shows a 1-mc square-wave (0.5 μsec on; 0.5 μsec off). The leading edge of the pulse switches the flip-flop output. This same edge is sent through the delay line, 0.8 μsec long in this case, and resets the flip-flop from the other side. The output pulse is seen to be 0.8 μsec wide. This allows 0.2 μsec for the flip-flop recovery, a time which is quite sufficient for the mesa transistor.

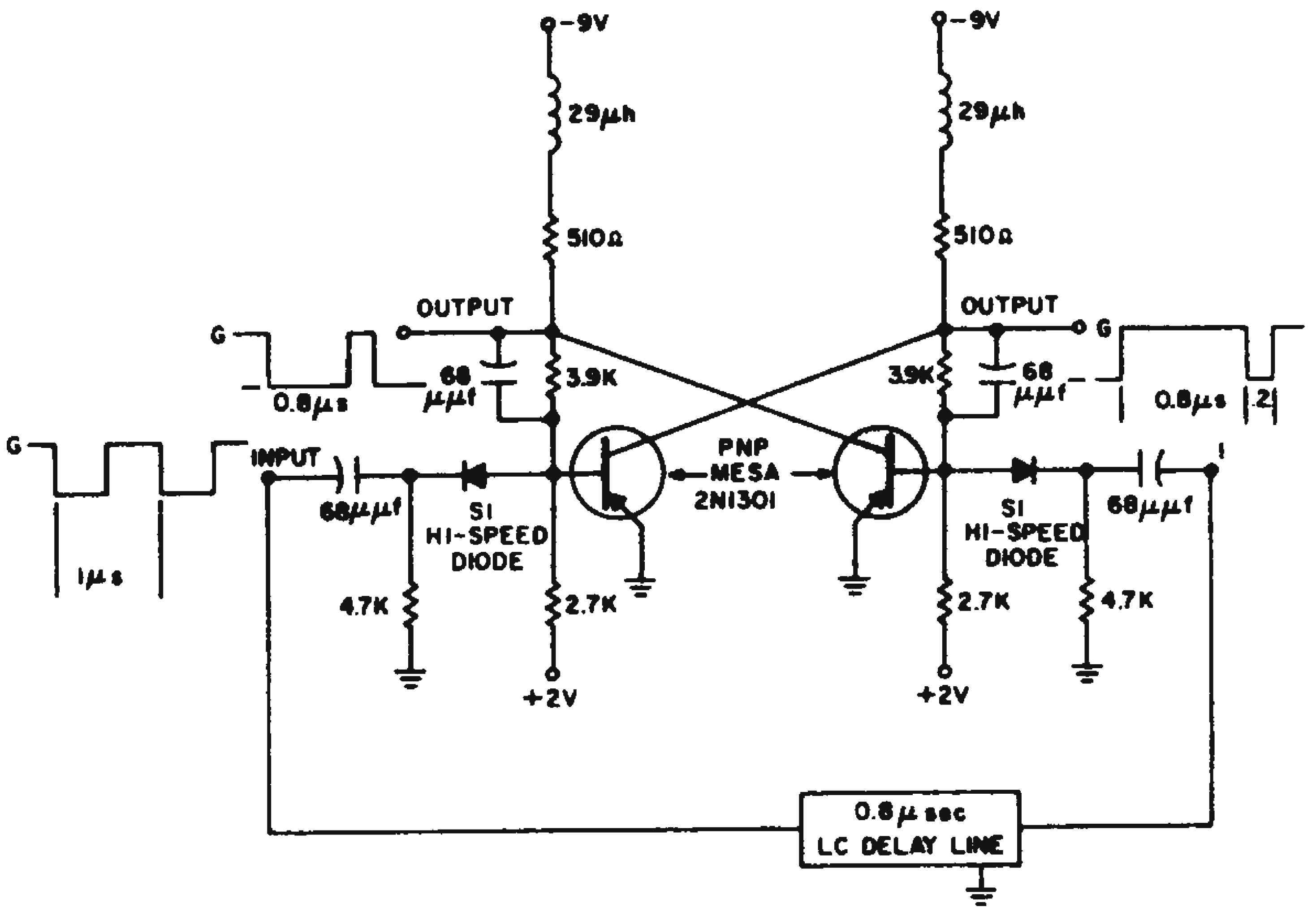

Pulse-stretcher uses a mesa transistor flip-flop. The length of the output pulse depends only upon the delay line.

Jack Shirman, Design Engineer, Stromberg-Carlson, Rochester, N.Y.

Modified One-Shot Multivibrator Acts As Pulse Decoder

A simple method for pulse decoding and producting squared output pulses of predetermined duration is illustrated by the circuit shown. The functions of a coincidence circuit and a separate one-shot multivibrator are here combined in a modified multivibrator circuit.

The pulse decoder, pentode tube V_1, is connected in a gating circuit to produce single pulses from pairs of pulses spaced p micro-

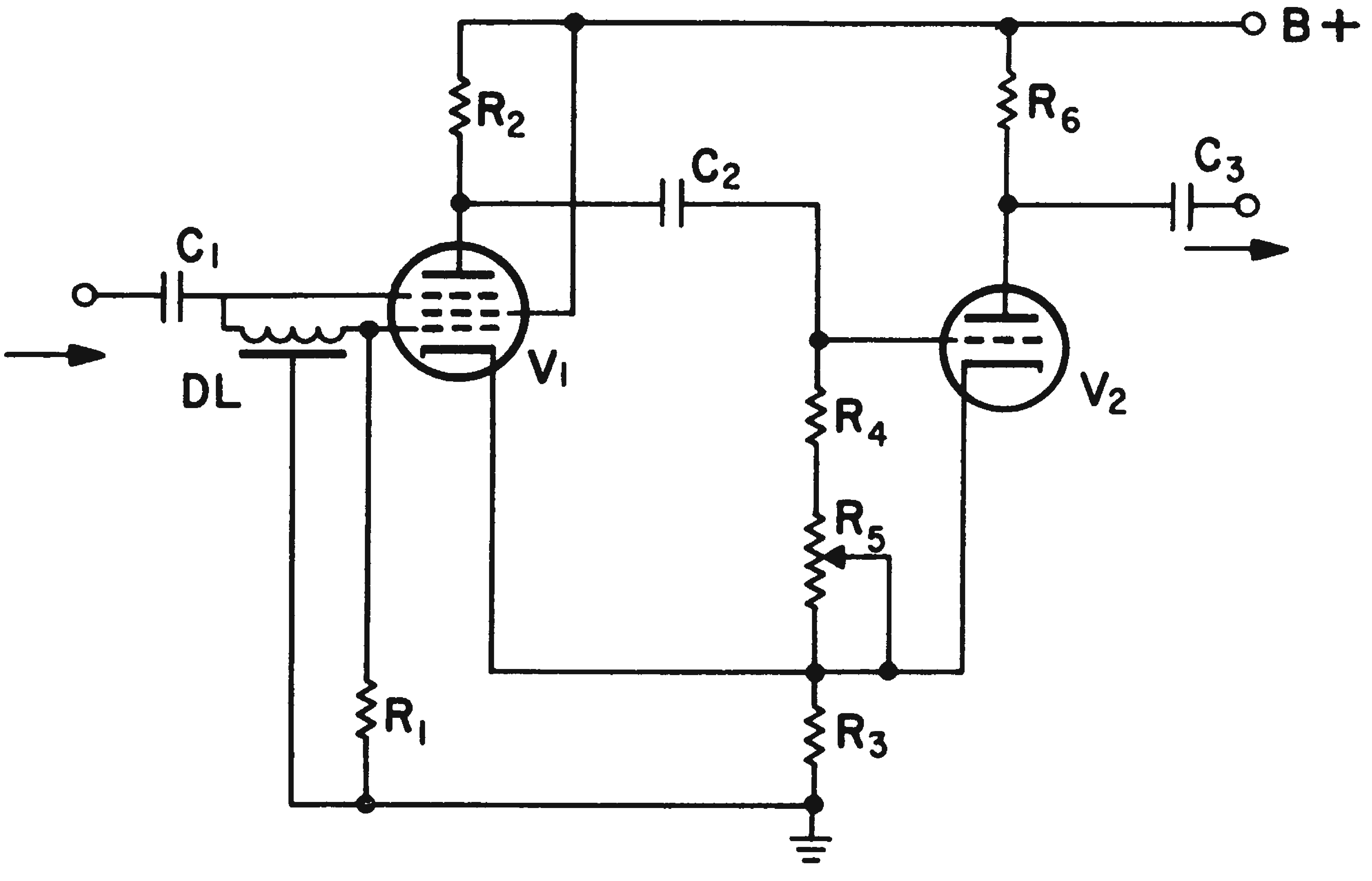

The modified multivibrator circuit acts as a pulse decoder and produces output pulses with a width determined by the time constant $(R_4+R_5)C_2$.

seconds apart. The design is such that V_1 is cut off by the positive voltage on its cathode. This bias is established by the drop across R_3 as a result of the current drawn by the normally conducting triode V_2.

Positive pulses are fed through coupling capacitor C_1 to both the *p* microsecond delay line, *DL*, and the suppressor grid of V_1. The delayed pulse output from *DL* is applied to the control grid. Conduction of V_1 will not occur until positive signals of proper amplitude and phase are applied to both the control and suppressor grids. This takes place only when pulse input is spaced *p* microseconds apart. When V_1 conducts, a negative output pulse is produced at the plate.

This negative pulse is applied, through C_2, to the grid of triode V_2, cutting the tube off. It remains cut-off while C_2 discharges. When the cut-off point is reached, plate current in V_2 again begins to flow. The turn-off time is determined by the time constant of the RC combination $C_2(R_4 + R_5)$. This also establishes the output pulse width. As soon as plate current starts to flow in V_2, a second switching process occurs, and the normal condition (V_2 on, V_1 off) is re-established.

A. N. Clay, Senior Engineer, ITT Laboratories, Nutley, N. J.

Logic Signal Intensifies Scope Display

During check-out of a digital computing system, it became necessary to intensify the oscilloscope display at a particular logical time in order to pinpoint the location of certain data.

The circuit shown, when connected to the scope's *Z* axis input, used computer derived logical signals to intensify the scope display. The intensifying signal *I* requires a negative pulse of 3-v amplitude or greater, referenced to ground. It is applied to the input diode of the inverter amplifier C_1. Previously cut-off, Q_1 suddenly saturates, causing inverter stage Q_2 to cut-off. The collector

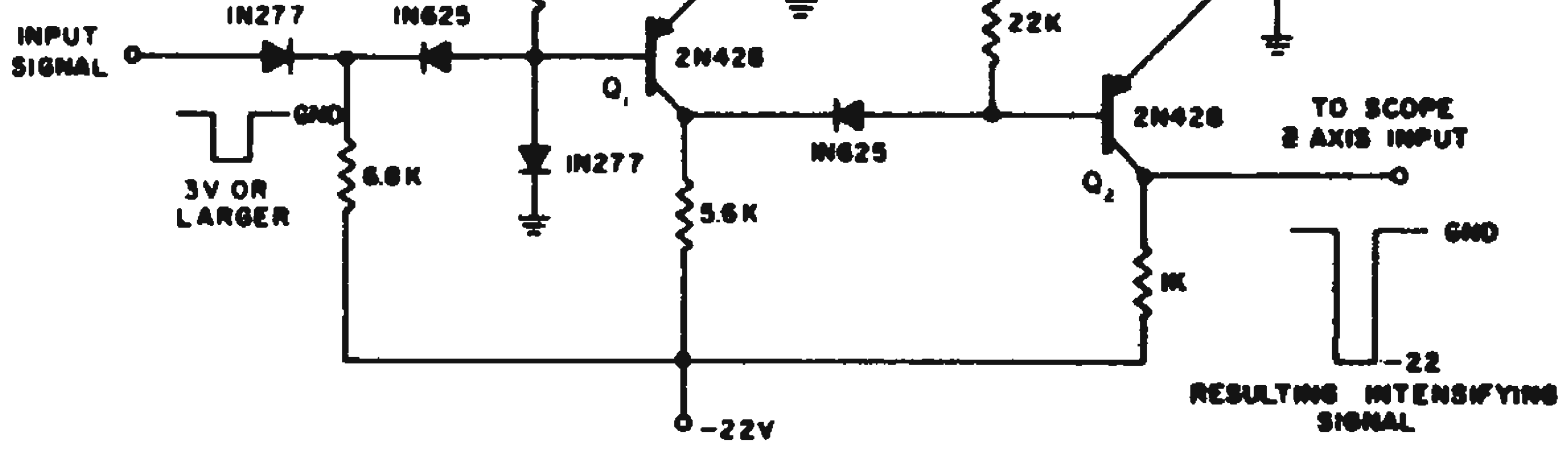

Logical pulse is applied at the input of the intensifying circuit which drives the *Z* axis input.

(output voltage of Q_2, previously at zero, drops to —22 v causing the scope display intensity to increase greatly. When the input signal returns to ground, the collector voltage of stage Q_2 returns to zero and the scope intensity returns to normal.

D. R. Shalita, Electronic Engineer, Litton Industries, Culver City, Calif.

Delay Line Added for Constant-Width Pulse

To make the pulse width of a monostable multivibrator independent of its circuit components and supply voltages, we placed a delay line in the output, as shown in the figure.

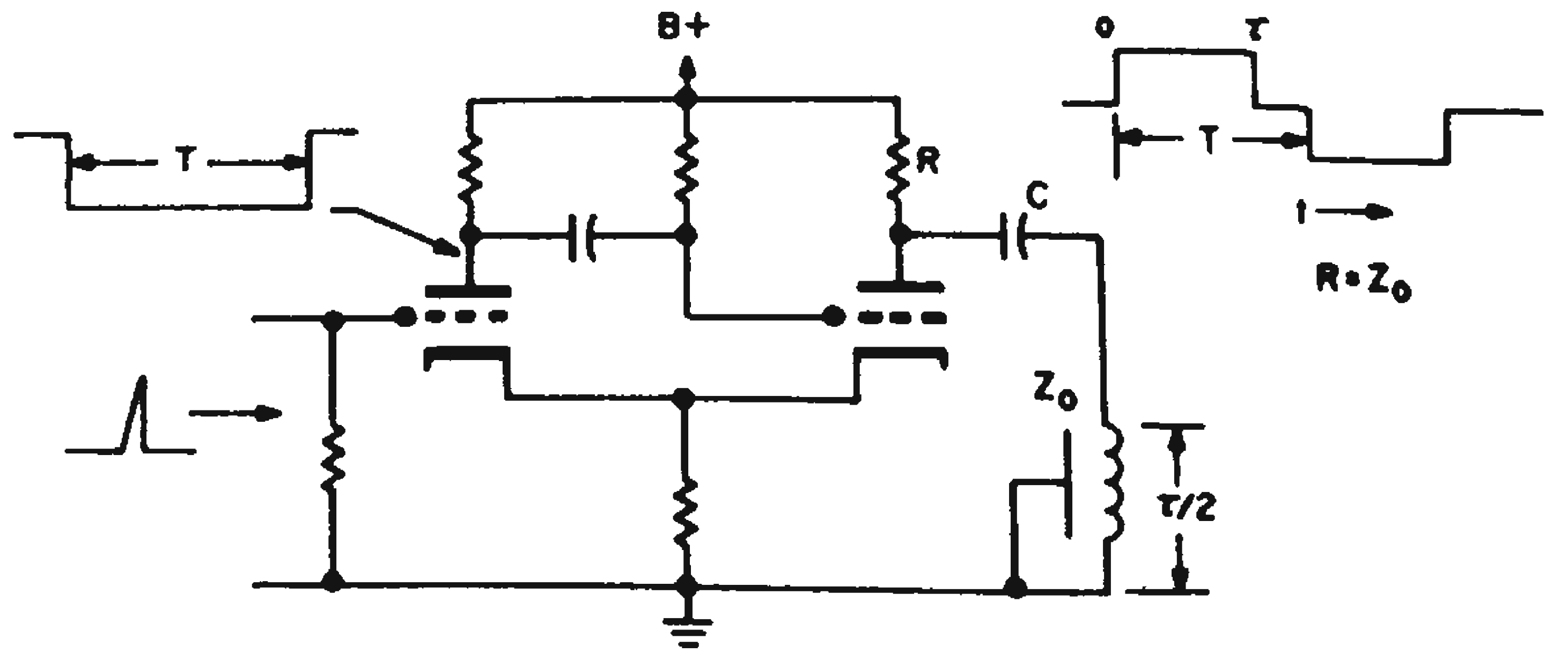

Shorted delay line forms constant-width output pulse.

Since the pulse width T of the one-shot multi is wider than the line delay τ, the waveform of width T is shaped by the shorted delay line. The width τ is now dependent only on the delay time of the delay line. This delay is essentially constant.

This scheme can also be applied to a transistorized one-shot multi. However, to prevent mismatch, it may be necessary to insert a matching resistor R_M in series with the delay line so that $R_M + Z_{out} = Z_0$ *where* Z_{out} is the transsistor output impedance.

Alfred W. Zinn, Project Engineer, Farrand Optical Co., New York, N. Y.

Simplified Squelch Circuit Uses Back Biased Diode

The squelch circuit shown was designed to be added to communication receivers. Its simplicity allows negligible receiver modification.

The circuit uses the switched diode principle, obtaining the switching voltage from a screen grid in the avc-controlled if amplifier. A larger than usual screen-grid dropping resistor is used, since the if amplifier is also operating as an avc amplifier.

The af from a high-impedance source is impressed on the anode of the IN459 diode and is effectively blocked by the back bias from R_2. When a signal is detected, the avc voltage rises. The screen voltage also rises and switches the diode to a relatively low forward resistance of about 10 K. Thus, the audio rides through with slight loss due to the voltage dividing action of the 10 K forward diode resistance and the approximately 500 K load resistance. This is a loss of only about 2 per cent. In the absence of avc voltage, the back bias raises the diode to a resistance on the order of 20 meg.

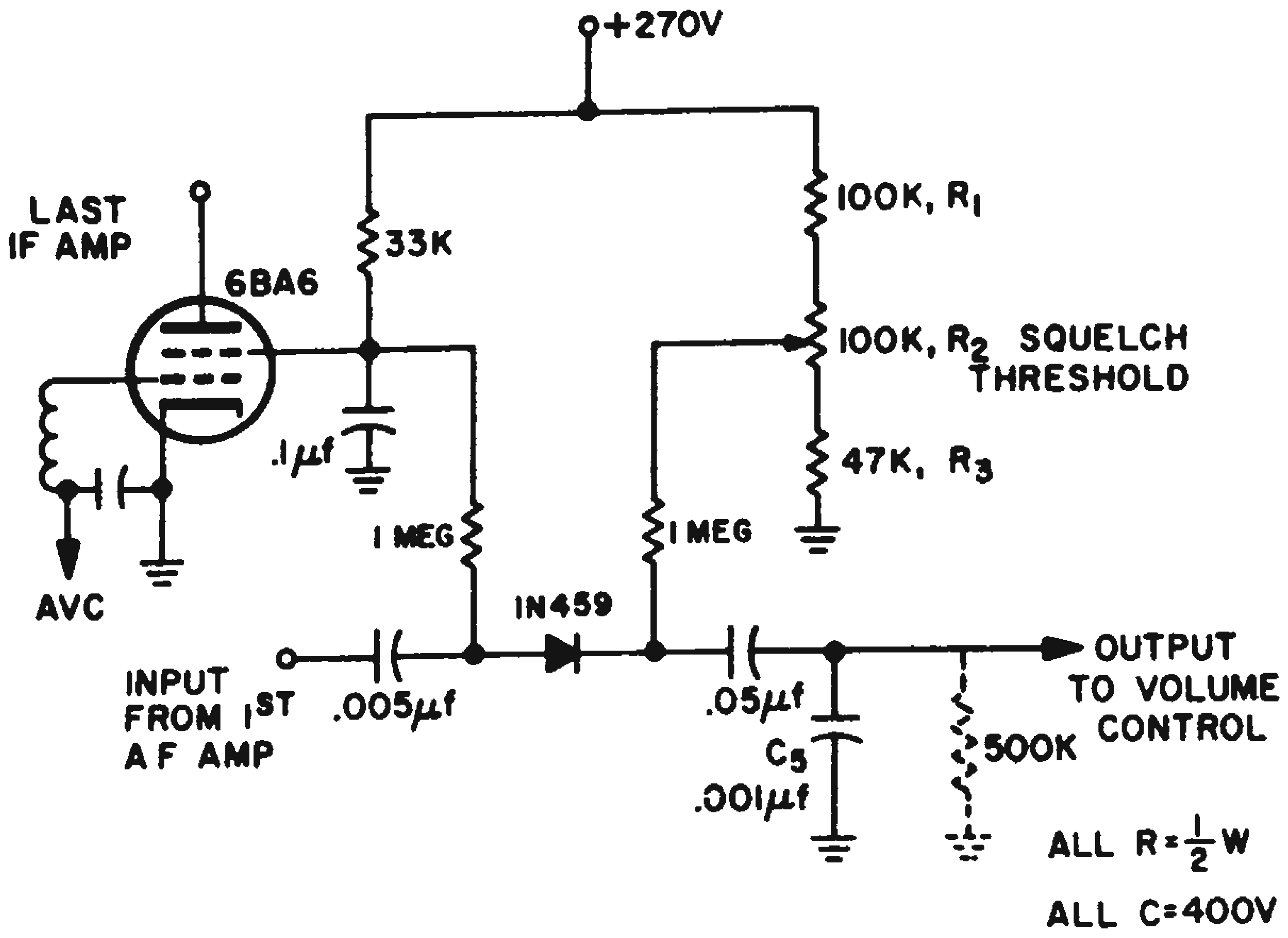

When a signal is detected, the avc voltage rises and the back biased diode is switched to its forward conducting state.

The signal can be allowed to ride through to verify, in the absence of a strong signal, that the receiver is operating although squelched. However, to almost completely kill this residual leakthrough, capacitor C_5 is added. This bypass is usually already present, in the af circuit, to attenuate the very high frequencies. It need only be moved to the output side of the diode and it will serve the former function of bypassing highs on conduction, and also silence the small feedthrough in the squelched condition.

The voltage swing at the screen grid for switching is about 10 v. R_1, R_2 and R_3 are proportioned so the lowest voltage of R_2 is below the voltage on the screen grid with only receiver noise present. This will allow turning the squelch off in the absence of any signal by rotating pot R_2 to that end. The upper voltage of R_2 is 10 v above that on the screen grid for the strongest received signal expected. The values given are used on a SP600JX type receiver.

If the limiter is used on the audio prior to its passage through the squelch the false alarms due to noise peaks are greatly reduced.

This squelch performs beautifully in communication work where interference is present but somewhat weaker than the desired signal. In this case R_2 is set to let through only the strong signal and quiet is obtained between transmissions.

E. Dusina, Electronic Engineer, Hollis, N. H.

Pushbutton-Actuated Circuit Gates Single Synchronous Pulse

Single synchronous pulses, stripped from a train of synchronous timing pulses can be used to perform control functions such as start, stop or reset. A pushbutton-actuated circuit for obtaining this single pulse is shown here. The circuit uses only standard logical elements, is self-resetting and can handle any number of pushbuttons and their corresponding single-pulse output lines.

In referring to the figure, note the following logic convention:

1. A timing pulse sets the flip-flop to a state determined by the gating levels. For example, a binary *1* at the *1* input enables the timing pulse to set the flip-flop to the *1* state.
2. A pulse applied to the *R* input unconditionally resets the flip-flop to the *0* state.
3. A pulse gate passes pulses when binary *1's* are present at the gating input.
4. The necessary circuit delays are built into the level-carrying lines of the flip-flops and pulse gates.

Initially, none of the buttons are depressed. Therefore, the output of the NOT is high and a timing pulse sets *FF-1* to the *0* state. With *FF-1* in the *0* state, a timing pulse sets *FF-2* to the *1* state. The master gate is held closed because *FF-1* is in the *0* state; the output gates are closed because of the *0* applied through the associated pushbuttons. The circuit is now in the quiescent state and remains there until a button is pushed.

When a pushbutton is depressed, *FF-1* is set to the *1* state. The output of the AND gate goes high and a pulse passes through the master gate. The output gate associated with the depressed pushbutton passes this pulse.

The output of the master gate is also applied to the reset input of *FF-2* *FF-2* is set to the *0* state. disabling the AND gate Hence, the master gate is closed and no more timing pulses can pass through. The circuit remains in this condition as long as the pushbutton is depressed.

When the pushbutton is released, the next timing pulse again sets *FF-1* to the *0* state. This enables the *FF-2* *1* input and the next timing pulse sets *FF-2* to the *1* state. The circuit is now reset to its initial state, and the cycle is complete.

It is apparent that one and only one synchronous timing pulse will be generated each time a pushbutton is depressed. Another pulse will not be generated until the button is completely released and then depressed again.

Joseph Friedman, Principal Engineer, Budd-Lewyt Electronics, Inc., Long Island City, N.Y.

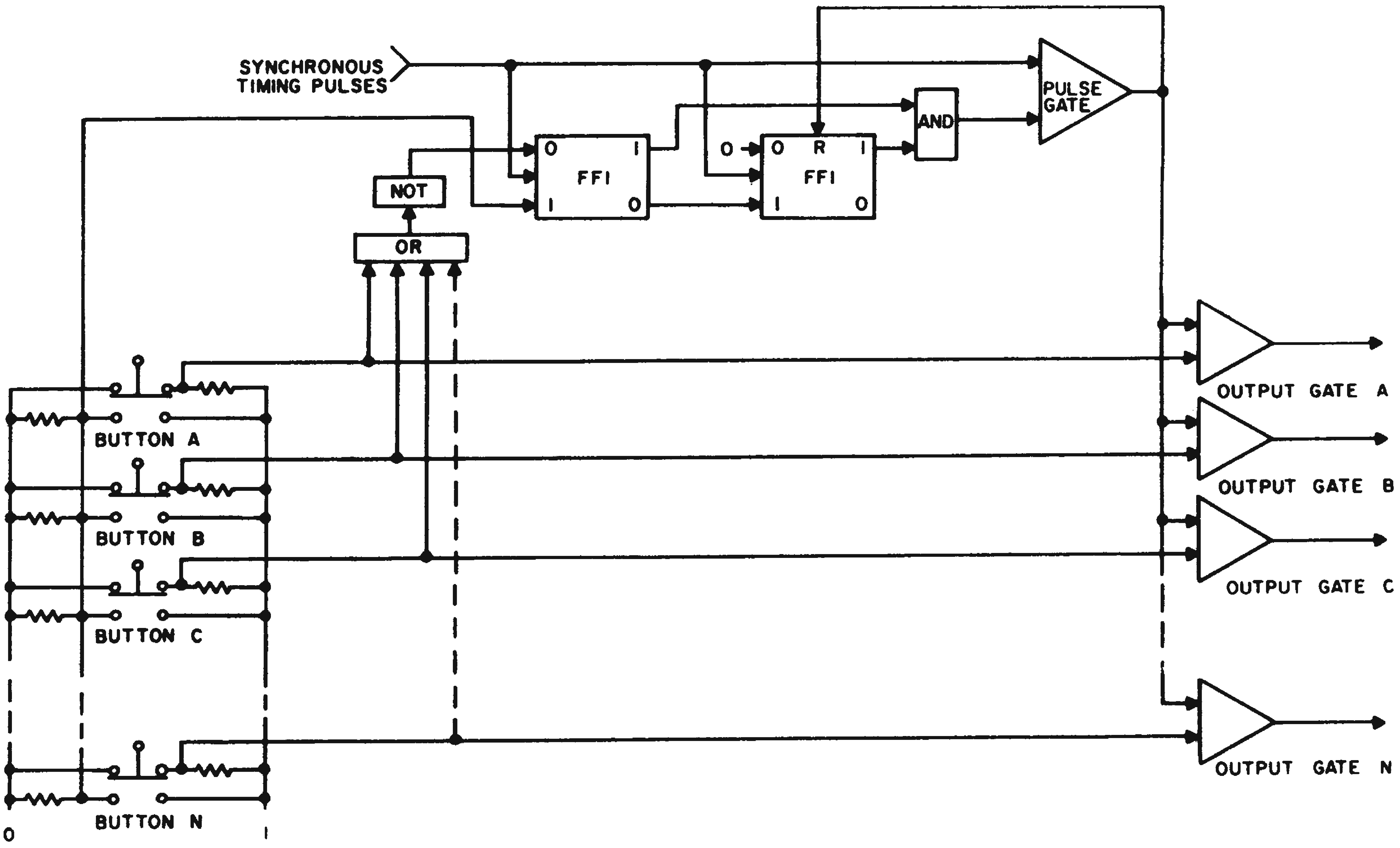

Pushbutton gating circuit requires only two flip-flops, but can pass a single synchronous pulse over any one of *n* output lines.

Variable Capacitor Adjusts Chopping Rate

A simple chopper circuit was needed which had variable chopping rates.

The circuit shown provided our solution. The

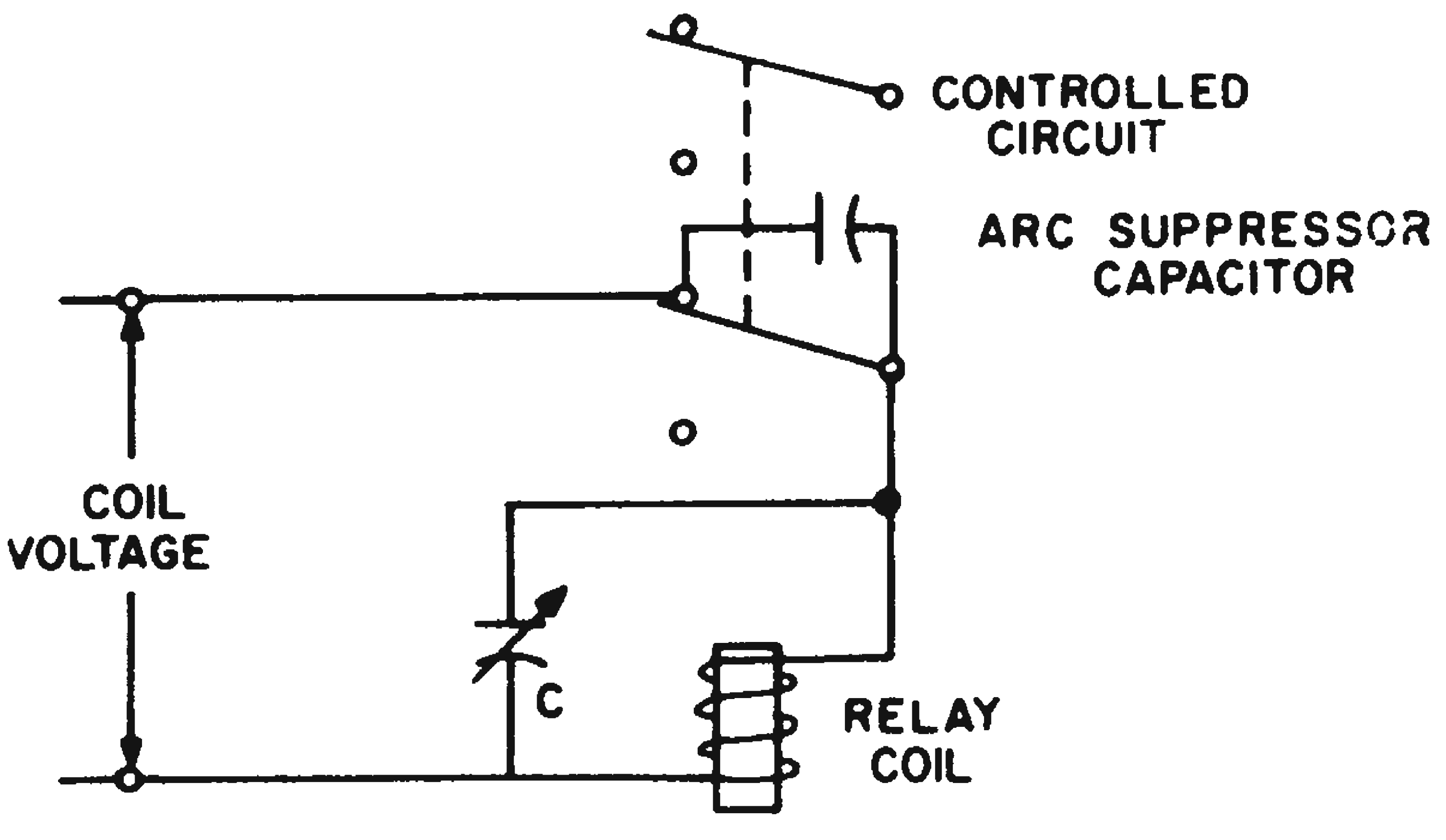

The variable shunt capacitor C adjusts the circuit's chopping rate.

normal operating time for the relay was used for maximum chopping speeds. With the addition of the shunt capacitor the chopping rate was decreased. Rates from 5 msec to 50 msec and more were possible by merely increasing the size of the shunt capacitor. Larger delays were obtained by cascading similar relay circuits.

H. Havlicek, Engineer, General Electric Co., Schenectady, N.Y.

Neon Tube R-C Oscillator Makes Low Repetition Rate Timer

A timer was required to generate fast rise, low impedance pulses at low repetition rates of from 0.01 to 100 per second. Many schemes, such as blocking oscillators, multivibrators and thyratron-type solid-state components, were tried, but suffered severely in stability, especially at the lower rates, because of dc triggering level jitter.

It was decided to investigate the stability of a simple neon tube *RC* oscillator using the stabilized Ne76. Firing voltage of this tube is held to close tolerances by including a small quantity of radio-active material in the envelope. The repetition period of the neon oscillator at low frequencies is given closely by $RC \log\left[\frac{V - E_F}{V - E_E}\right]$, in which RC is the resistor and capacitor time constant, V is the supply voltage, E_F and E_E the neon tube firing and extinguishing voltages respectively.

Because of the log function of voltages, pulse rates of such an oscillator are very insensitive to V, E_F, or E_E changes. Generally, E_F is 72 v, while E_E is 50 v. The circuit shown capacitively couples the neon timer to a transistorized Schmitt circuit. Silicon 2N240's are used, mainly to conserve space. Negative or positive going pulses are obtainable by simply inverting the neon tube voltage *V* and resetting the dc base bias of the input transistor.

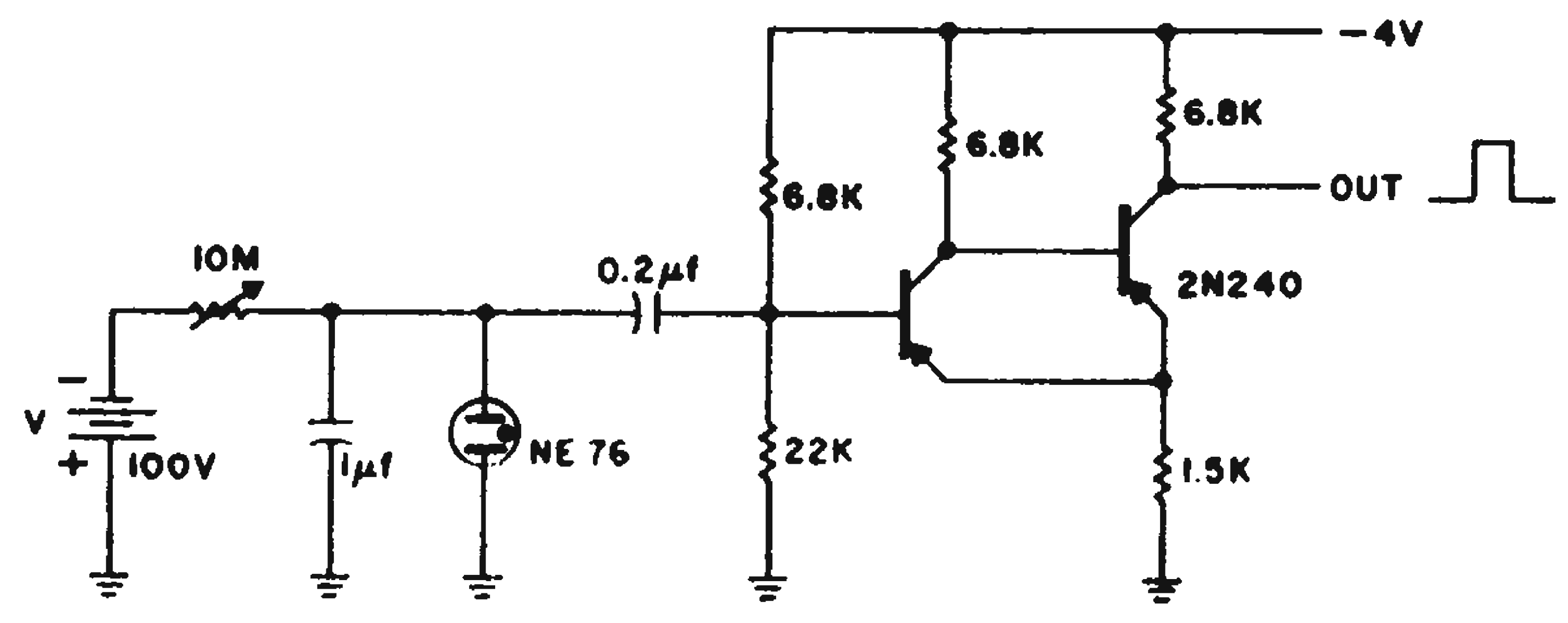

Pulse timer designed to give 0.02-µsec rise-time Pulses at intervals of up to 10 sec. Repetition rate is variable by adjusting RC time constant of neon tube circuit.

The circuit met the following specifications: subminiaturization, ruggedness, low power, simplicity, an output spike of 3 v at 0.02 µsec rise time. It had a repetition accuracy of better than 2 per cent at 10 sec, even after 100,000 flashes at a neon bulb temperature of 150 C, under high radiation intensities.

Patrick F. Howden, Electronics Engineer, Consolidated Systems Corp., Los Angeles, Calif.

Capacitors Halve Reverse-Voltage In Flux-Switching Circuit

A large amount of flux had to be switched into a magnetic circuit in a short time interval. The high-frequency transistors that would do the job were limited to a relatively low back-voltage swing. Without the dotted capacitors, the voltage

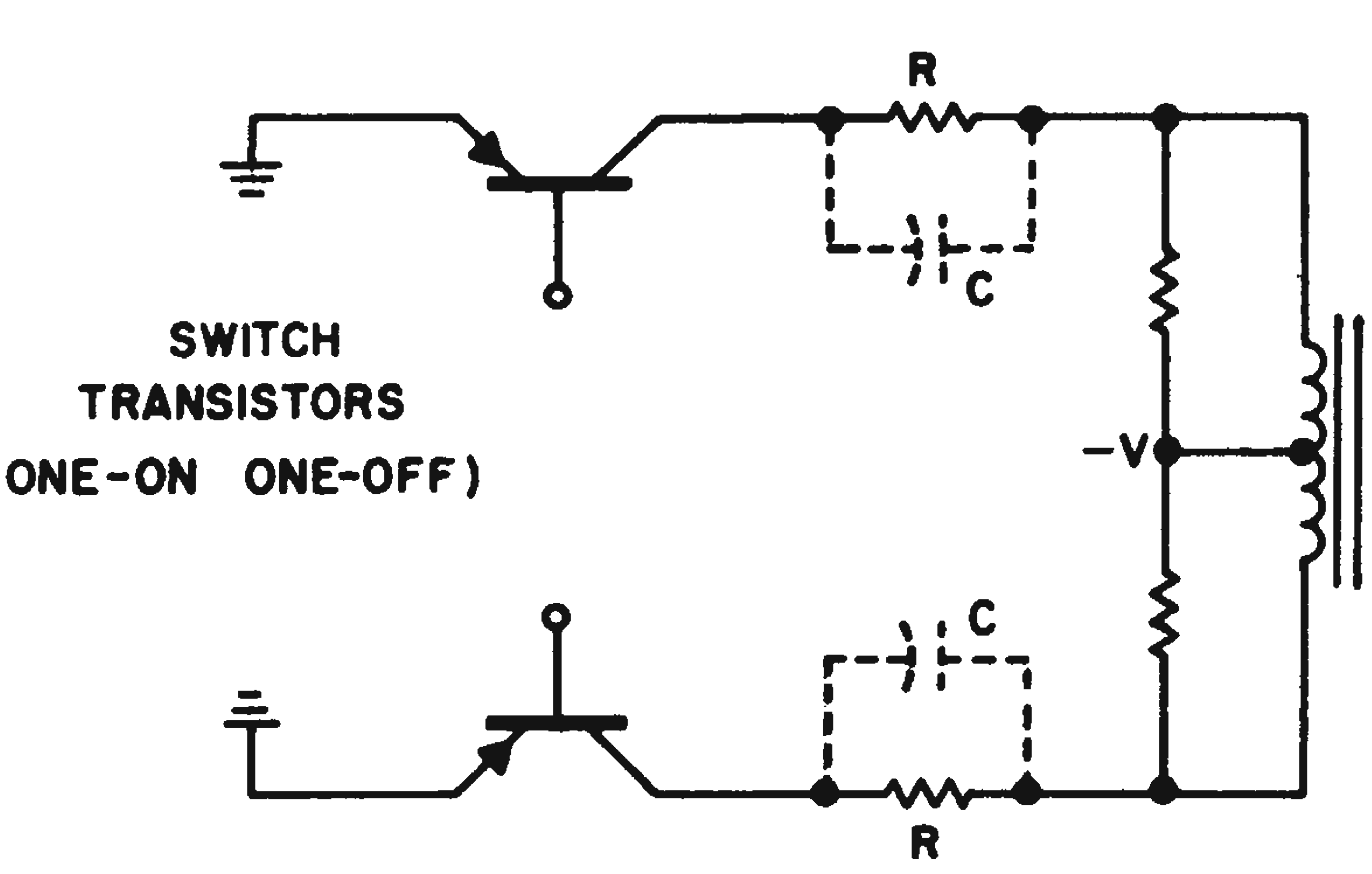

at the switched-off transistor jumps to —2 v while the other transistor is being switched on.

With the capacitors added, as shown, and their value chosen to present the proper RC time constant, the voltage at the transistor switch will not go more negative than the supply voltage V. Thus, the voltage the transistor must stand decreases by a factor of one-half. This idea made the use of the desired high-frequency transistors possible. Though the device here was a magnetic head, the same arrangement could be useful in any circuit built to supply a rapid flux build-up.

Richard S. Muller, Technical Staff, Hughes Aircraft Co., Culver City, Calif.

Digital FM Technique Used to Delay Analog Signal

Delay of an analog signal by a magnetostrictive line can be accomplished with the digital FM technique outlined in the block diagram. This technique avoids several of the disadvantages of the more conventional delaying methods.

An analog signal can be delayed by a magnetotrictive line by amplitude or frequency modulating either a pulse or a sine-wave carrier. Although simple to apply, these methods suffer because the signal distortion and noise factor grow progressively worse with increasing delay time. These disadvantages can be eliminated by using the digital techniques of pulse code modulation (PCM). In a PCM, system distortion and signal-to-noise ratio are independent of time delay. They are functions only of the characteristics of the pulse code modulator and demodulator. However, for these characteristics to be acceptable, it is necessary to use many quantizing levels. This requires unduly complicated terminal equipment.

The digital FM technique outlined here is midway in design complexity between the simple analog methods and the PCM system. Referring to the block diagram, a sine-wave oscillator is frequency modulated by the input analog signal. The modulated output is first squared and then sampled in an AND gate by digital strobe pulses. The repetition rate of the strobe pulses is at least twice the frequency of the highest sideband in the modulated signal.

The pulses from the AND gate pass into the delay-line driver where they are shaped for transmission along the delay line. The received signal from the delay line is amplified and strobed in an output gate. Then the pulses are widened before being sent through a low-pass filter to recover the frequency modulated signal. This signal is then fed to a frequency demodulator the output of which is a delayed replica of the input analog signal.

The maximum analog bandwidth which can be delayed is a function of the peak digital frequency at which the delay line can be operated. There are commercial delay lines available which can operate at a frequency of 5 mc in a non-return-to-zero (NRZ) mode. If such a delay line is used, the maximum bandwidth of the entire modulated signal including the carrier and all sidebands is limited to 2.5 mc.

Arthur Rothbart, Consulting Engineer, New York, N. Y.

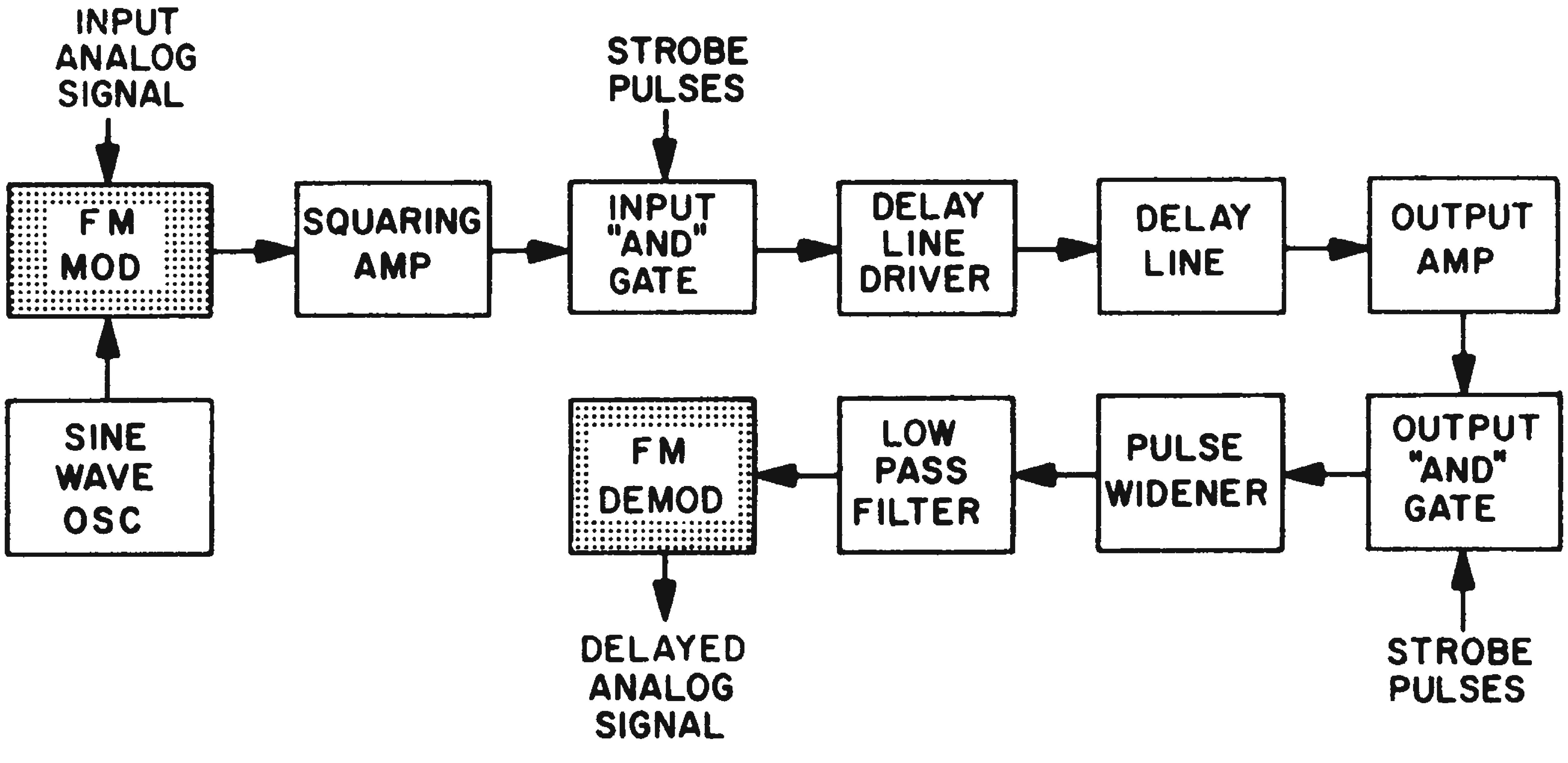

Modulated analog signal is AND gated with strobe pulses, passed onto the delay line, and then demodulated to obtain a delayed signal.

Holding Capacitor Fires Neon on Short Pulses

By adding a voltage-holding capacitor, neon tube indicators can be used in situations where pulse durations are shorter than the tubes' turn-on time. The capacitor is connected as shown in the figure.

When a fast negative pulse appears, the capacitor C will charge through the diode, D. With the termination of the pulse, the negative voltage is blocked by D and remains on C. If the pulse amplitude is large enough, the tube will fire. After firing, tube current will flow through D and the resistor R.

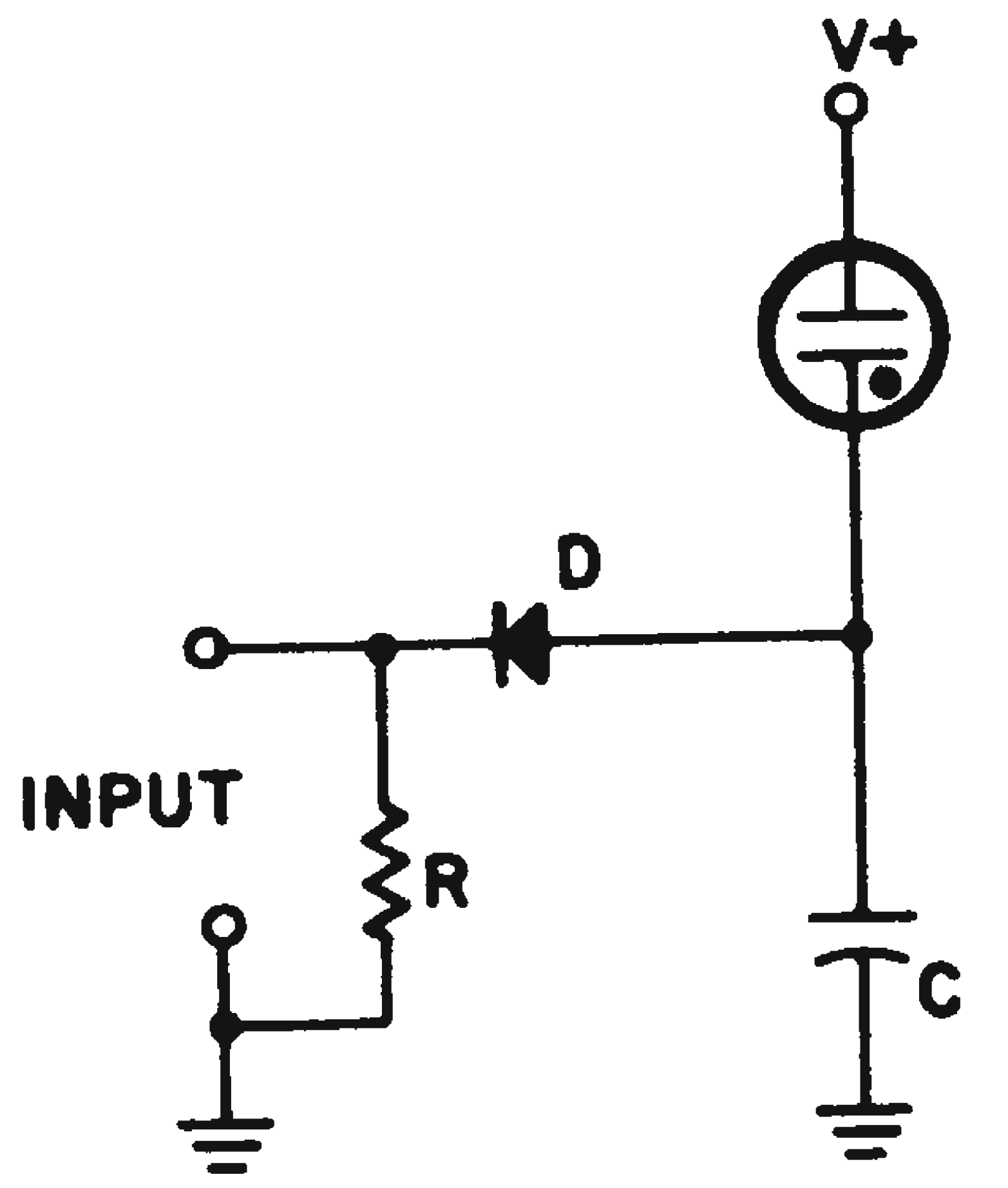

Capacitor C holds the fast input pulse voltage amplitude until the neon tube can fire.

This idea supports the use of the neon tube indicators as explained by A. Hemel in his Idea for Design "Neon Lamp Matrix Stores Information Visually" (ED, April 27, p 123).

David S. J. Smith, Project Engineer, Stromberg-Carlson Co., Rochester, N.Y.

Blocking Diodes Stabilize Multivibrator Frequency

Transistor multivibrator circuits can be stabilized against the effects of the transistor reverse leakage current, I_{co}, by inserting blocking diodes as shown in the figure.

By preventing I_{co} from flowing into the timing circuit, variations in multivibrator frequency as the operating temperature is increased are avoided. Resistor R passes I_{co}, blocked from flowing into timing capacitor C, to ground and holds the transistor off. Diode D_1 clamps the base of the off transistor to near ground. This prevents resistor R from pulling the base so far off that the blocking diode will conduct prematurely. Except for the action of these new components in blocking I_{co}, the circuit operation is conventional.

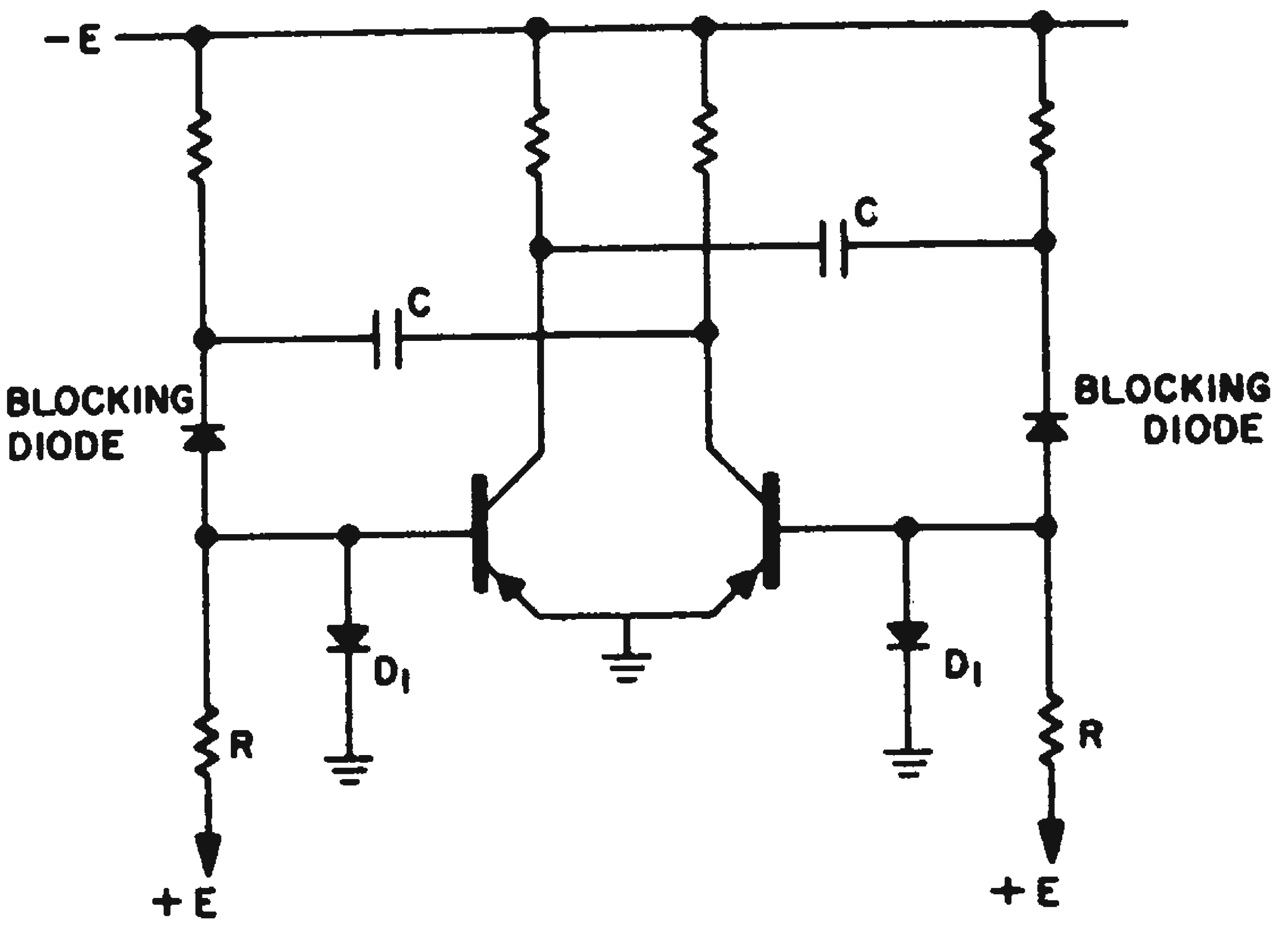

Blocking diodes prevent transistor reverse leakage current, I_{co}, from charging the timing capacitor C. Multivibrator frequency is kept constant as ambient temperature varies.

Roy P. Foerster, Group Engineer, The Martin Co., Baltimore, Md.

Modified Circuit Limits Pulse Amplitude More Effectively

The pulse amplitude limiter described in *ED*'s, April 27, 1960, Ideas for Design column is not

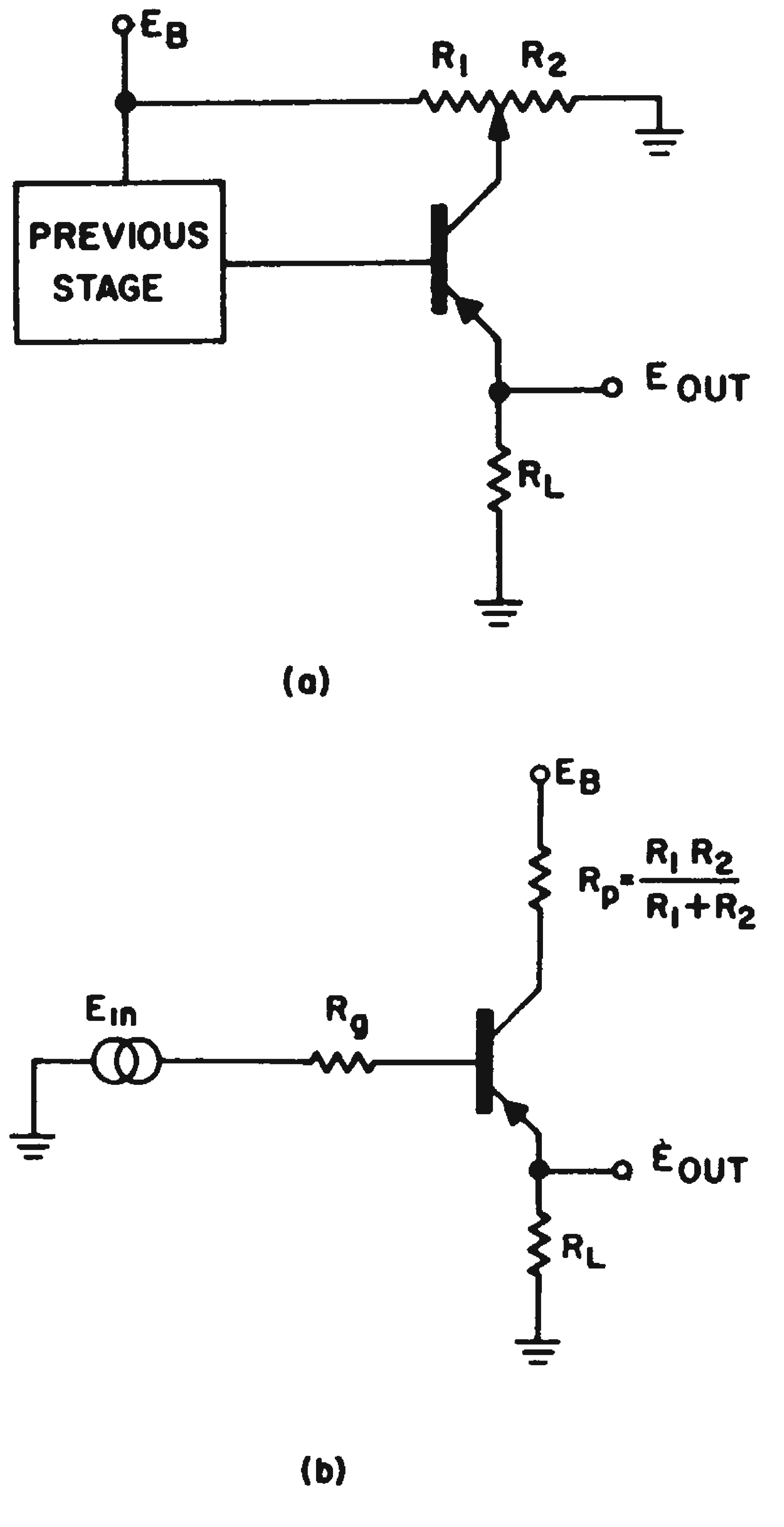

Fig. 1. Output voltage of this pulse amplitude limiting circuit (reprinted from Ideas for Design, *ED*, April 27, 1960, p 120) is still a function of the input voltage (see Eq. 1).

really a limiter because the output voltage is still a function of the input voltage.

Given the device shown in Fig. 1, when $|E_{in}| > |E_g|$ the output voltage is

$$E_{out} = \frac{\frac{E_{in}}{R_g} + \frac{E_b}{R_p}}{\left[\frac{1}{R_g} + \frac{1}{R_p} + \frac{1}{R_L}\right]}$$

In order to truly clamp to E_B, R_p would have to equal zero. This would eliminate the use of a bled-down power supply, as the author suggests. If another power supply is used and $R_p = 0$, then there is the danger of excessive current in the base lead if R_g is small.

If R_p is finite and $R_G \ll R_p$, the output would follow the input. In effect, all you would have is a resistive attenuator. As a matter of fact, no emitter follower action results when $|E_{in}| > |E_b|$ because of the saturation of the transistor.

A more effective way of limiting or clipping is shown in Fig. 2.

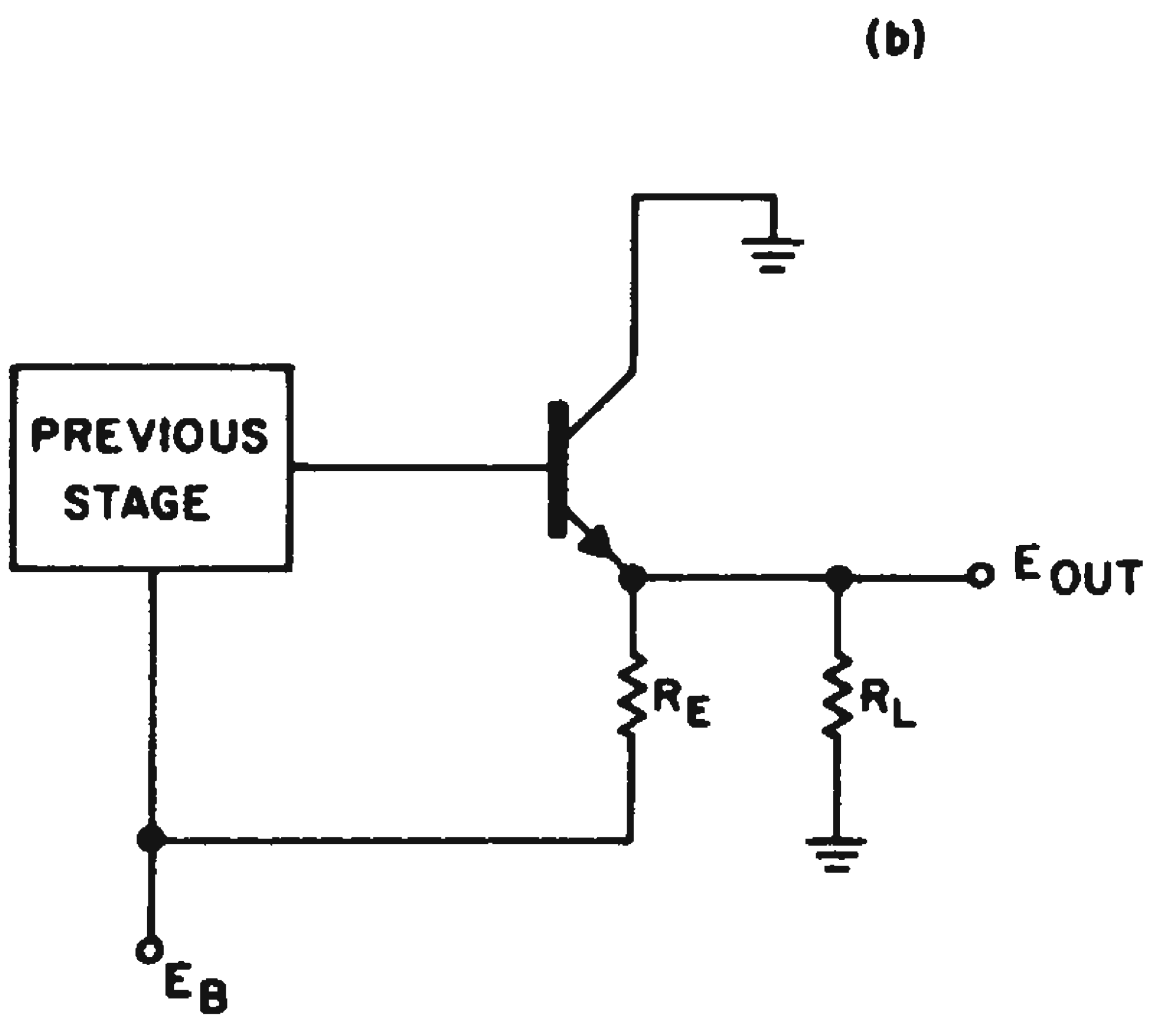

Fig. 2. With this circuit, the output voltage will clip at a value independent of the input voltage

Using an npn transistor for the emitter follower, the transistor will cut off when $|E| > |E_G|R_L/(R_E + R_L)$. Then the output voltage will clip at $E_bR_L/(R_E + R_L)$ for any E_{in} whose absolute value is greater.

The above discussion holds for negative pulses. Obviously, a pnp transistor properly biased could be used to limit a positive pulse.

Burt H. Liebowitz, Engineer, Airborne Instruments Laboratory, Huntington, N.Y.

Pulse Inverter for Positive and Negative Pulses

A two-output pulse inverter was required which would convert positive and negative input pulses to all positive pulses in one output, and all negative pulses in the other.

The circuit shown accomplishes this very easily.

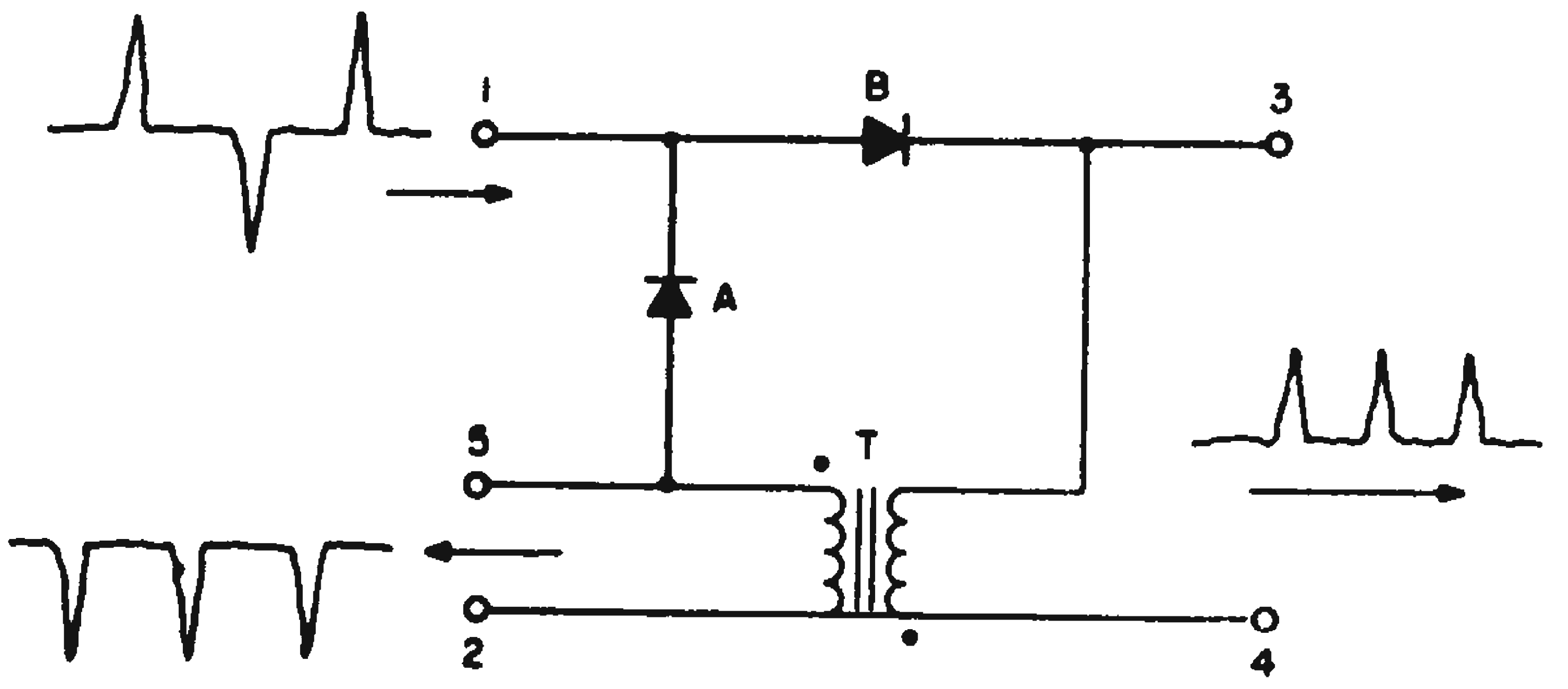

The train of positive and negative pulses is applied at input *1-2*. Positive pulses are passed through diode *B* and appear at output *3-4*. Negative pulses are blocked by this diode. However, they pass through Diode *A* and are then inverted by the pulse transformer to appear as positive pulses at output *3-4*.

Similarly, negative input pulses pass through diode *A* and appear at output *2-5*. Positive input pulses, blocked by A, pass through diode *B* and are inverted by the transformer to become negative pulses at output *2-5*.

Thus, every input pulse has been converted to both a positive and negative output pulse.

Alfred W. Zinn, Engineer, Farrand Optical Co., Bronx, N.Y.

Zener Diode Circuit Shifts Level of Uniform Amplitude Pulses

We had to shift a train of random input, uniform amplitude pulses, of either plus or minus 10 v levels, to lie between zero and —20 v. Because of the random nature of the input, an RC type of dc restorer could not be used. Our solution to the problem is shown in the figure.

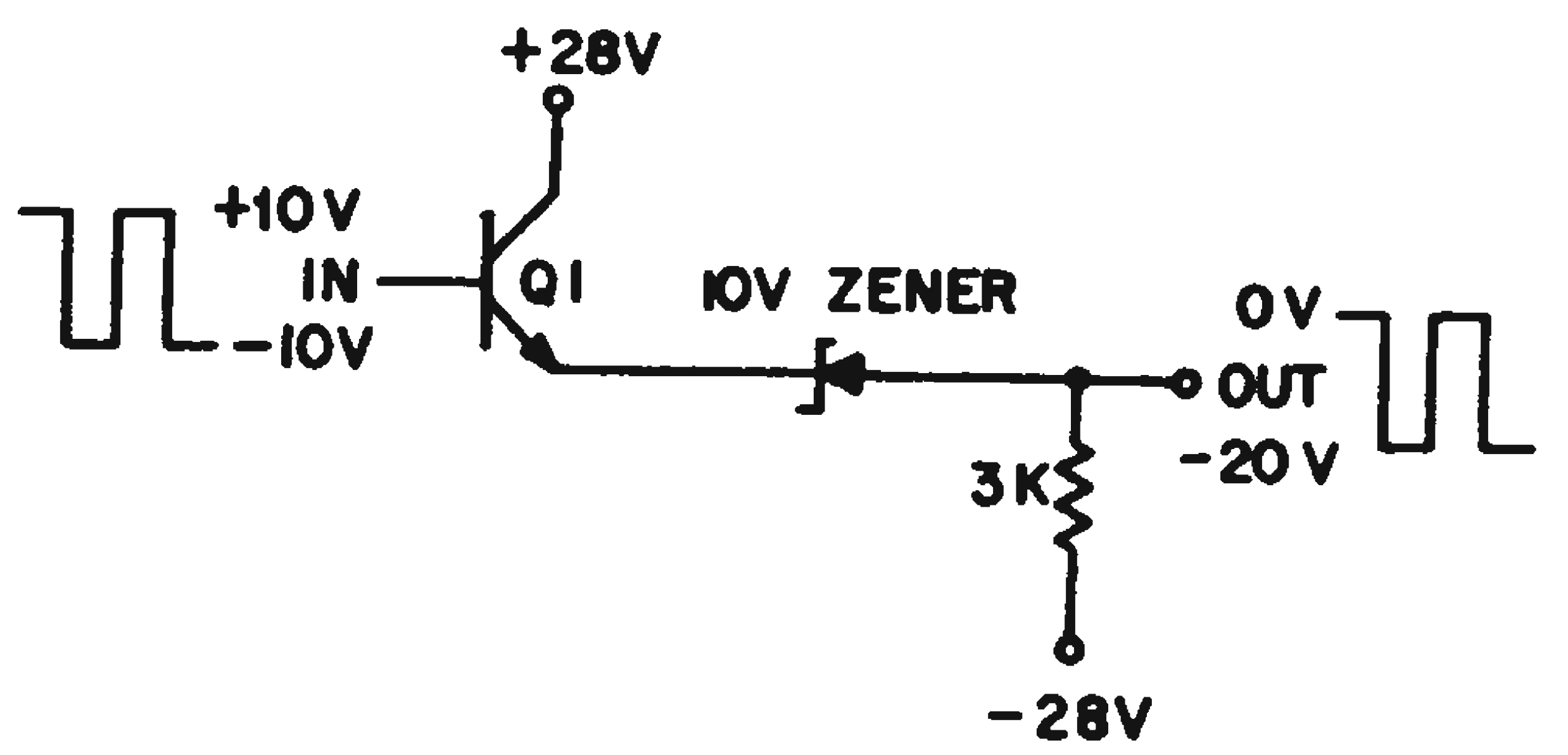

Constant-voltage Zener diode shifts input pulses to new levels.

Emitter follower Q_1 isolates the level shifting Zener diode from the input signal source. When the input is at +10 v, (assuming a negligible V_{BE}), the Zener diode looks into an open circuit voltage of 38 v. This voltage is great enough to break the Zener down. Thus, with +10 v input and 10 v dropped across the Zener, the output will sit at zero volt. Similarly with —10 v input, the output will be at —20 v. The slight shift in Zener voltage due to diode current variations was not critical in this application.

P. Cutler, Universal Electronic Controls, Garden Grove, Calif.

Suppressor Grid Voltage Varied for Constant Amplitude Pulses

By feeding back a proportionate signal to the suppressor grid of a pentode, a pulse amplifier was designed whose output remained relatively constant as the input signal varied.

The signal of pulses is applied at the grid of the Class A operated pentode circuit shown in the accompanying figure. The tube can be a 6A56 or a type having a similar value of suppressor grid-to-plate transconductance. At the plate, the positive side of the amplified signal is clamped to ground by CR_1. It is then peak-detected to produce a negative voltage at the junction of R and C_2. This voltage is then tapped and fed to the suppressor grid. Since the suppressor grid voltage will vary directly with the plate signal, the gain of the tube will vary inversely with the control grid amplitude. This will tend to keep the output pulse-amplitude constant as the input-amplitude is varied.

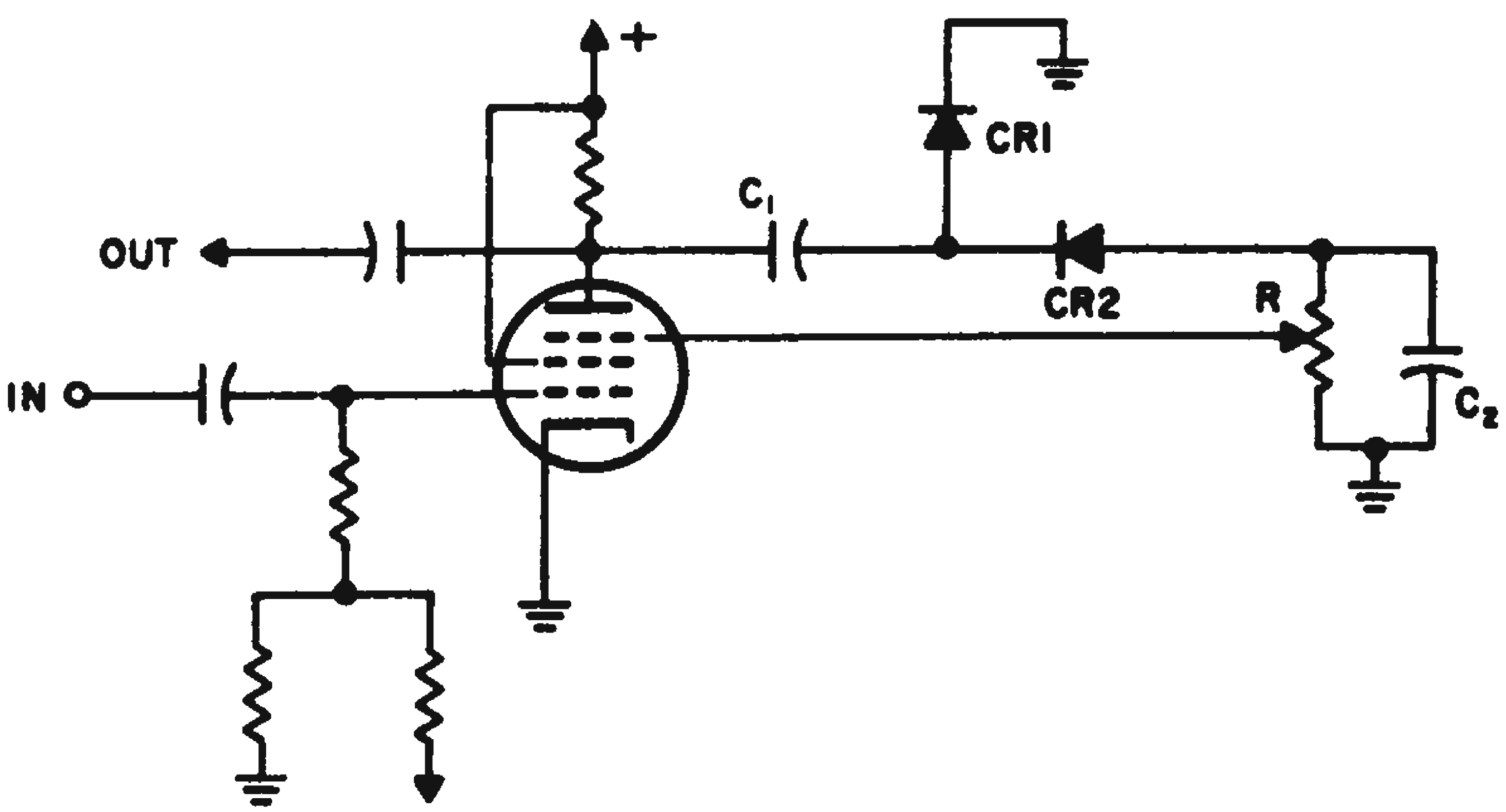

Output amplitude is maintained constant by varying the negative suppressor grid voltage, thereby controlling the stage gain.

Arthur M. Goldschmidt, Electronic Engineer, Moorestown, N. J.

LF Multivibrator Uses Unijunction Transistors

A source of repeating contact closures in the range of 1/10 pulse per second to 10 pulses per second was required for life testing of arc suppressors for relays and stepper switches. It was desirable to vary the on-to-off ratio, and to manually actuate a single shot.

An electro-mechanical multivibrator was built, using RC timing and unijunction transistors to operate the relay. A magnetic latching relay was the bi-stable element.

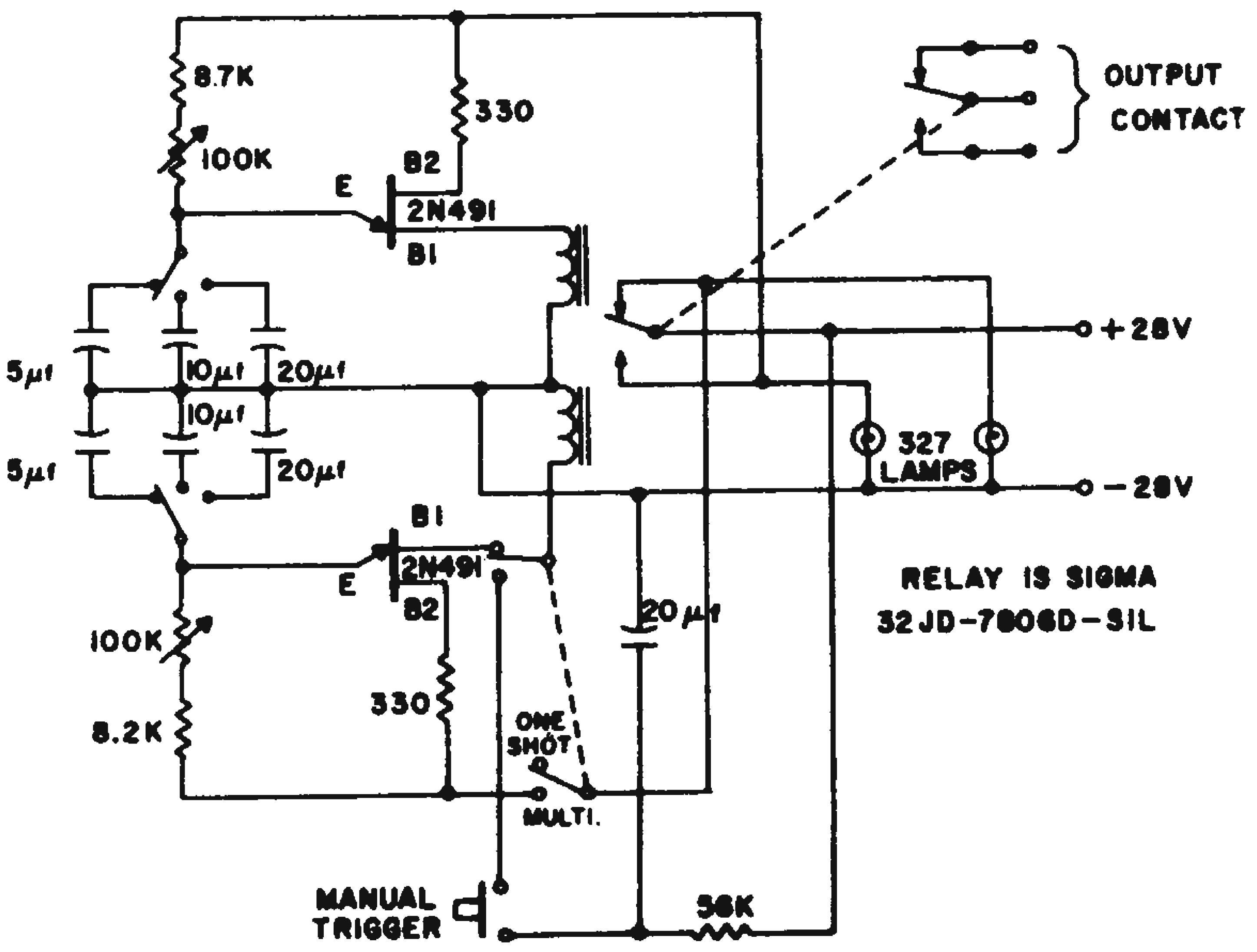

In operation, the relay applies 28 v to the unijunction transistor and the RC charging circuit. When voltage builds up, as determined by the capacitor selected and the setting of the 100 K potentiometer, the unijunction transistor fires, transferring the relay to its other state. The same action takes place in the second unijunction circuit, causing transfer back to the original state.

For single shot operation, one unijunction circuit is replaced by a push-button, used to discharge a capacitor into the proper relay coil. This switches the relay and initiates the timing action of the remaining unijunction circuit.

Ernest F. Wilson, Senior Electrical Engineer, Edgerton, Germeshausen & Grier, Inc., Boston, Mass.

Tunnel Diode Acts As Sensitive Voltage Level Detector

We needed a voltage level detector which would switch over within 50 mv of the reference level. It had to operate at 1 mc. Several different types of Schmitt trigger circuits were designed, but these all had unstable switching regions of 0.1 v or more.

The desired operation was achieved by using a tunnel diode as the level detector, Fig. 1. The diode's voltage-current characteristic is shown in Fig. 2.

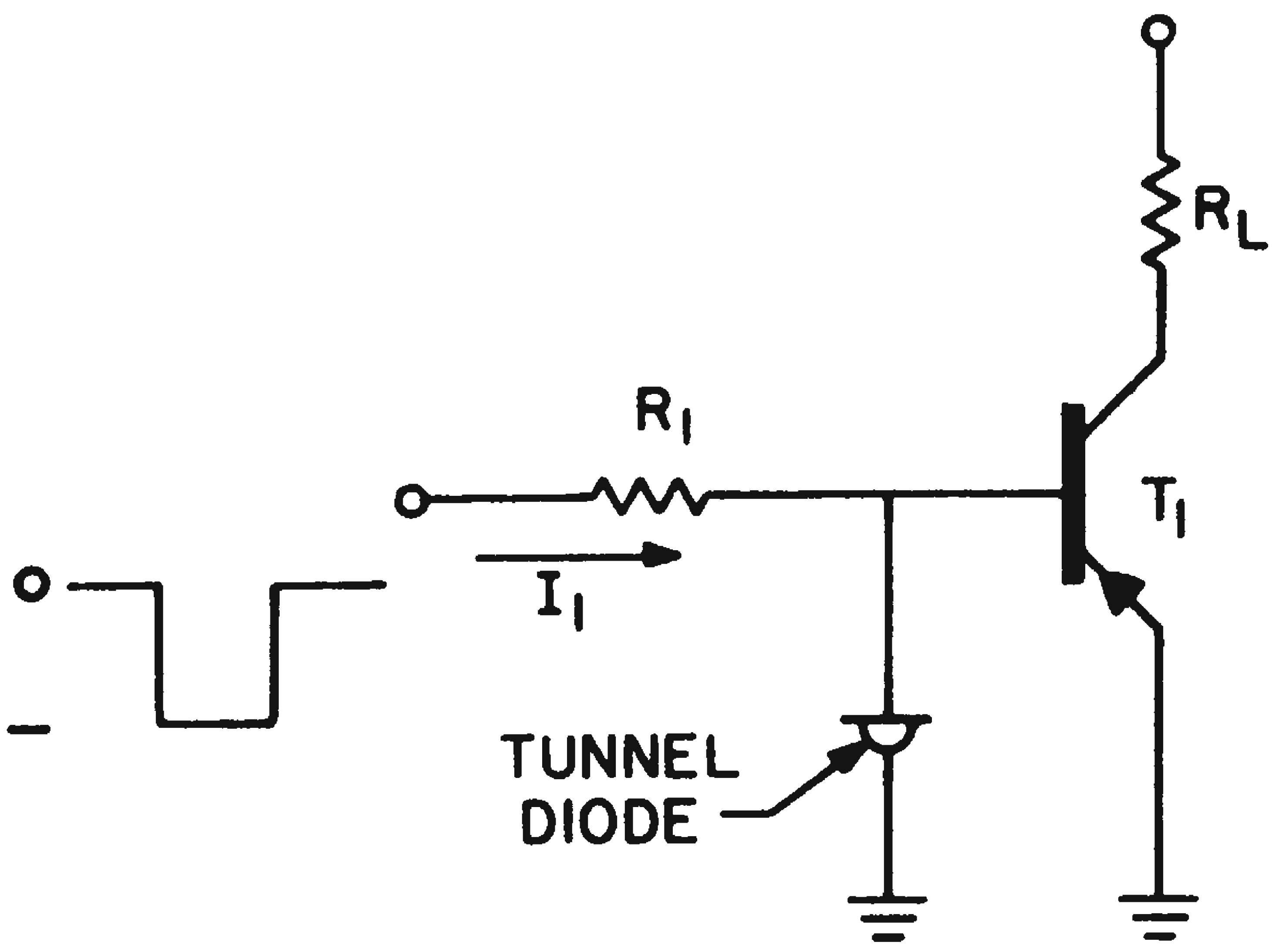

Fig. 1. The tunnel diode sets the voltage level at which transistor *T* will be switched on.

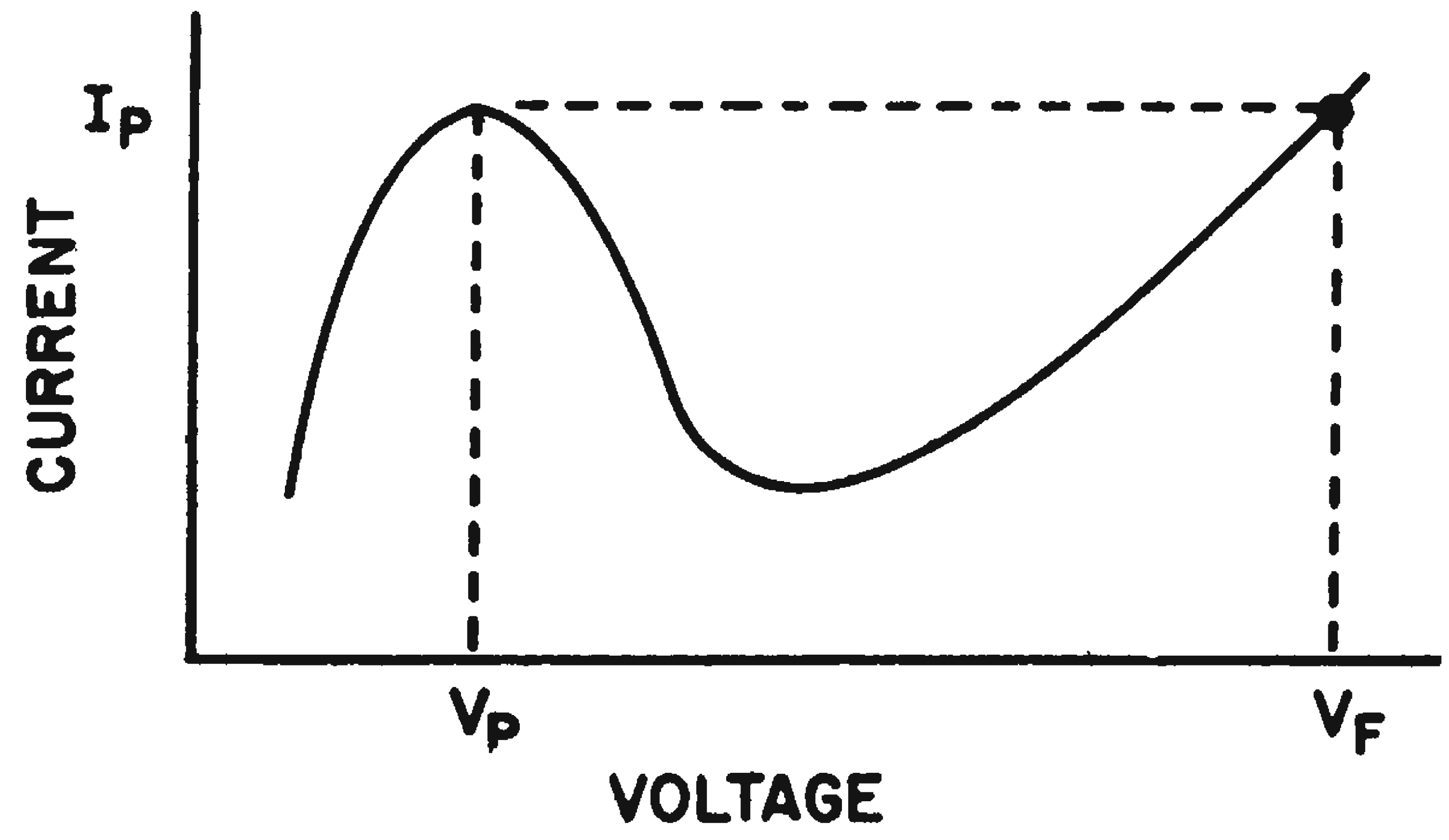

Fig. 2. Tunnel diode voltage-current characteristics.

Before I_1 reaches I_p, the diode is conducting and has less than V_p volts across it. V_p is not enough to turn the transistor on. However, after I_p is reached (0.05 v) the diode breaks over to voltage V_f. This voltage is great enough to turn the transistor on. The tunnel diode not only is an excellent level detector, but also limits the saturation of the transistor. This reduces the storage time and allows faster pulse operation.

J. F. Martin, Design Engineer, Stromberg-Carlson Co., Rochester, N. Y.

Feedback Amplifier Generates Narrow Pulses

Operating from a 6-v supply and a 5-mc sine wave input, the transistor pulse generator, Fig. 1, supplies 18 nsec, 1.5-v pulses into a 56-ohm load. The simple circuit is a compact source of narrow pulses for applications where square-shaped trigger-pulses are not essential.

Although the schematic resembles that of a blocking oscillator, the generator is basically an amplifier biased to prevent conduction in the absence of an input signal. Positive feedback is provided by the transformer, which has a reasonably high *Q* at a frequency of about five times the pulse repetition frequency of the input signal. The transformer band-pass is designed to allow about a 90-per-cent build-up during the time the input brings the transistor out of cut-off. The transformers used 3/8 in. diam Ferramic *G* cores obtained from the General Ceramics Corp. The winding ratios were varied somewhat with specific applications but generally ran one or two turns on the base winding and five to seven turns on the collector. Tertiary windings and the various output methods common to blocking oscillators worked well.

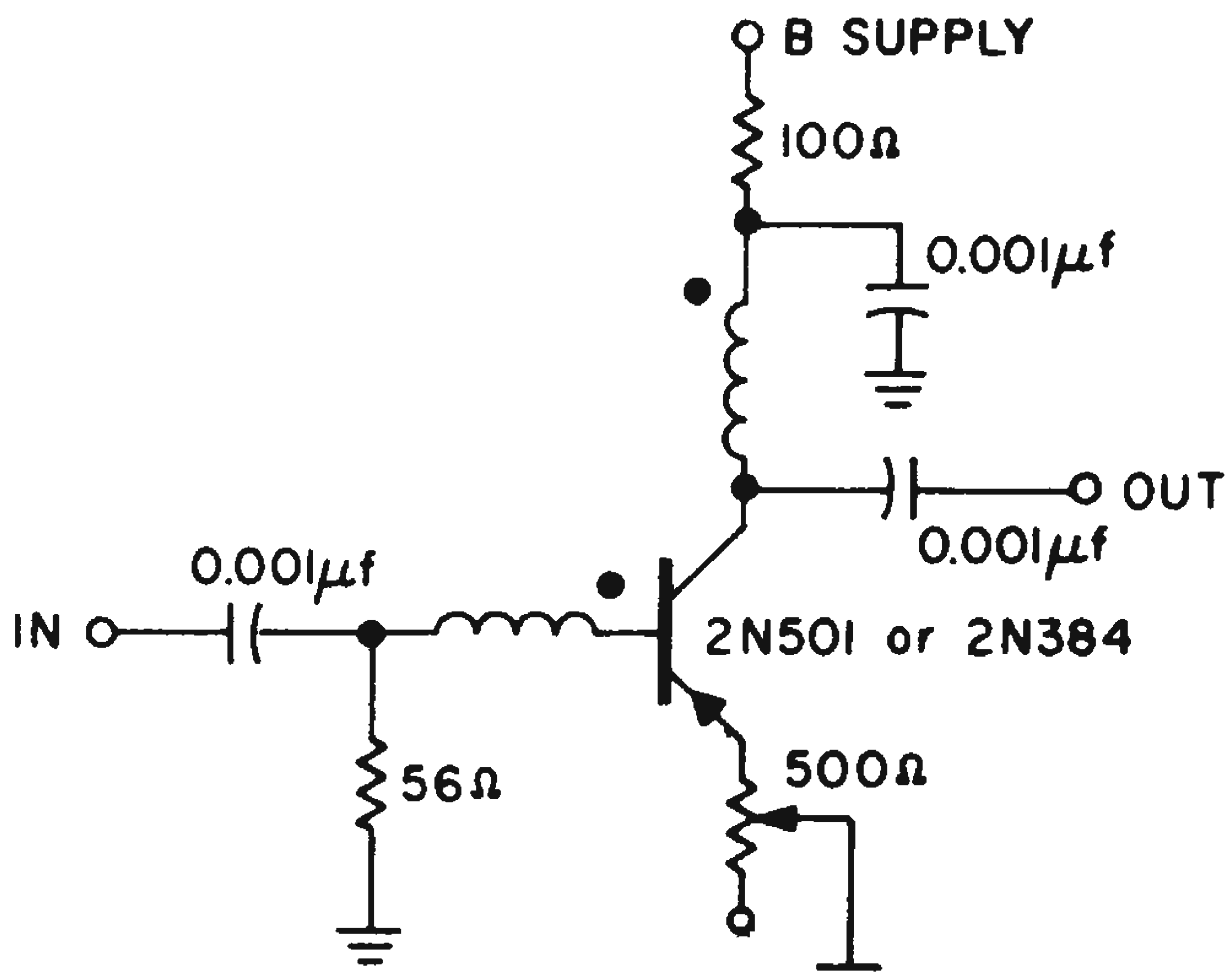

Fig. 1. Although its schematic is similar to that of a blocking oscillator, the pulse generator differs considerably in operation and in output waveform.

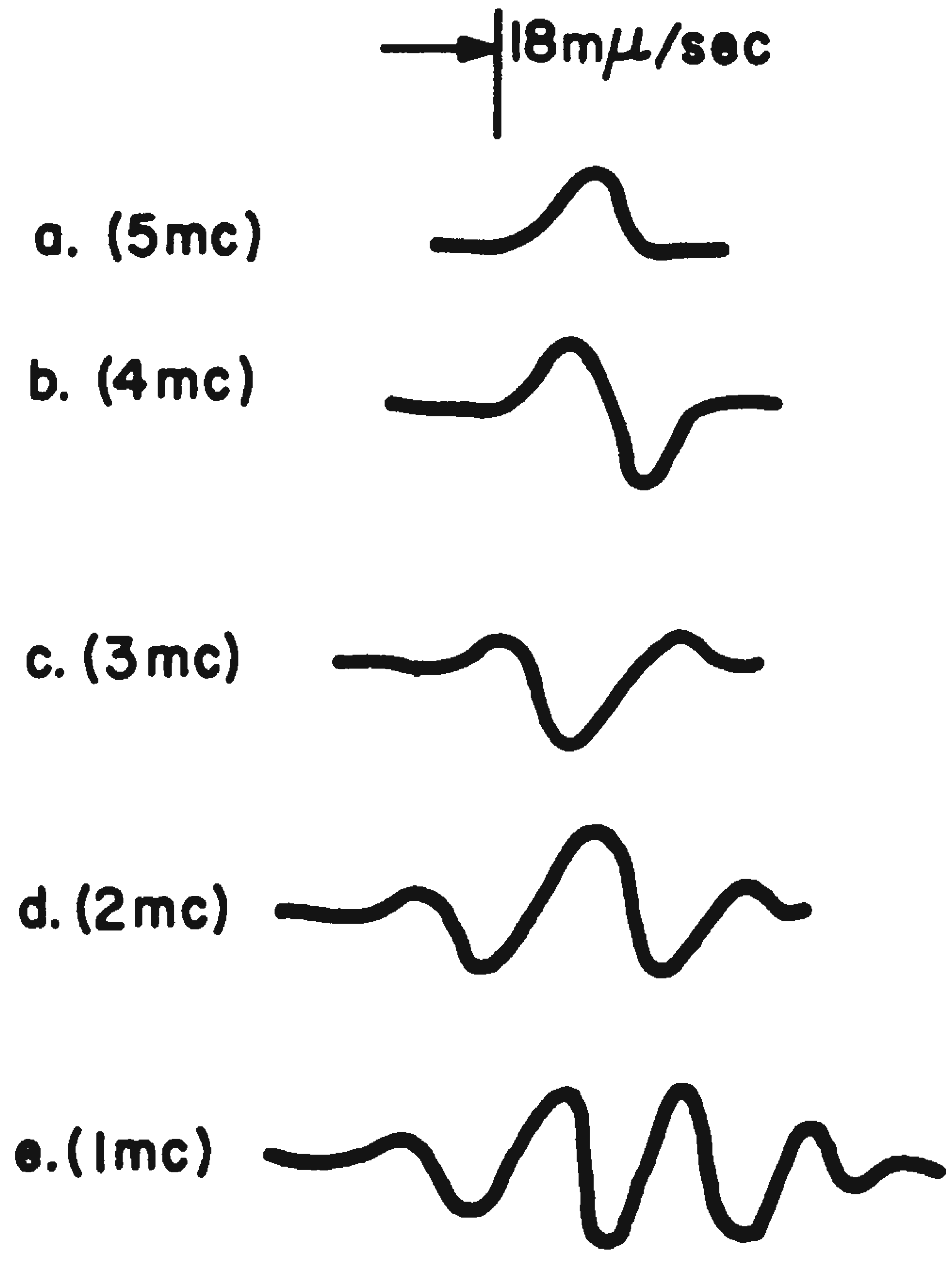

Fig. 2. Output waveforms for various input frequencies.

With the circuit biased well into cut-off, and the excursion of the drive signal only slightly above the value needed to bring the stage out of cut-off, the output is divided into a narrow pulse. The rise time of the transformer is such that the first cycle of oscillation is of very low amplitude. By the time the transformer output has built up to 90 per cent, the input signal is removed, and decay begins. This provides outputs of the form shown in Fig. 2, where the drive frequency is progressively decreased, being 5 mc for (a) and 1 mc for (e).

When feeding a 5-ohm load, the output pulse width increased to 38 nsec and the peak-to-peak voltage was only 0.9 v. It was also found that two generators in cascade produced the 18-nsec pulse width from an input as low as 5 kc.

Winding the transformer was simple because of the few turns required. Encapsulated, the unit was about the size of a dime. Leads were positioned by inserting them in a transistor socket during the encapsulation. This permitted the circuit to be plugged into a conventional transistor socket.

Richard Allen, Engineer, The Martin Co., Baltimore, Md.

Cut-Off Diode Triggers Fast Output Pulses

Computer control systems often require fast trigger pulses of fixed duration and amplitude generated at a time coincident with the leading or trailing edge of a control pulse. These pulses should not be too dependent on the input signal rise time and should load the input as little as possible.

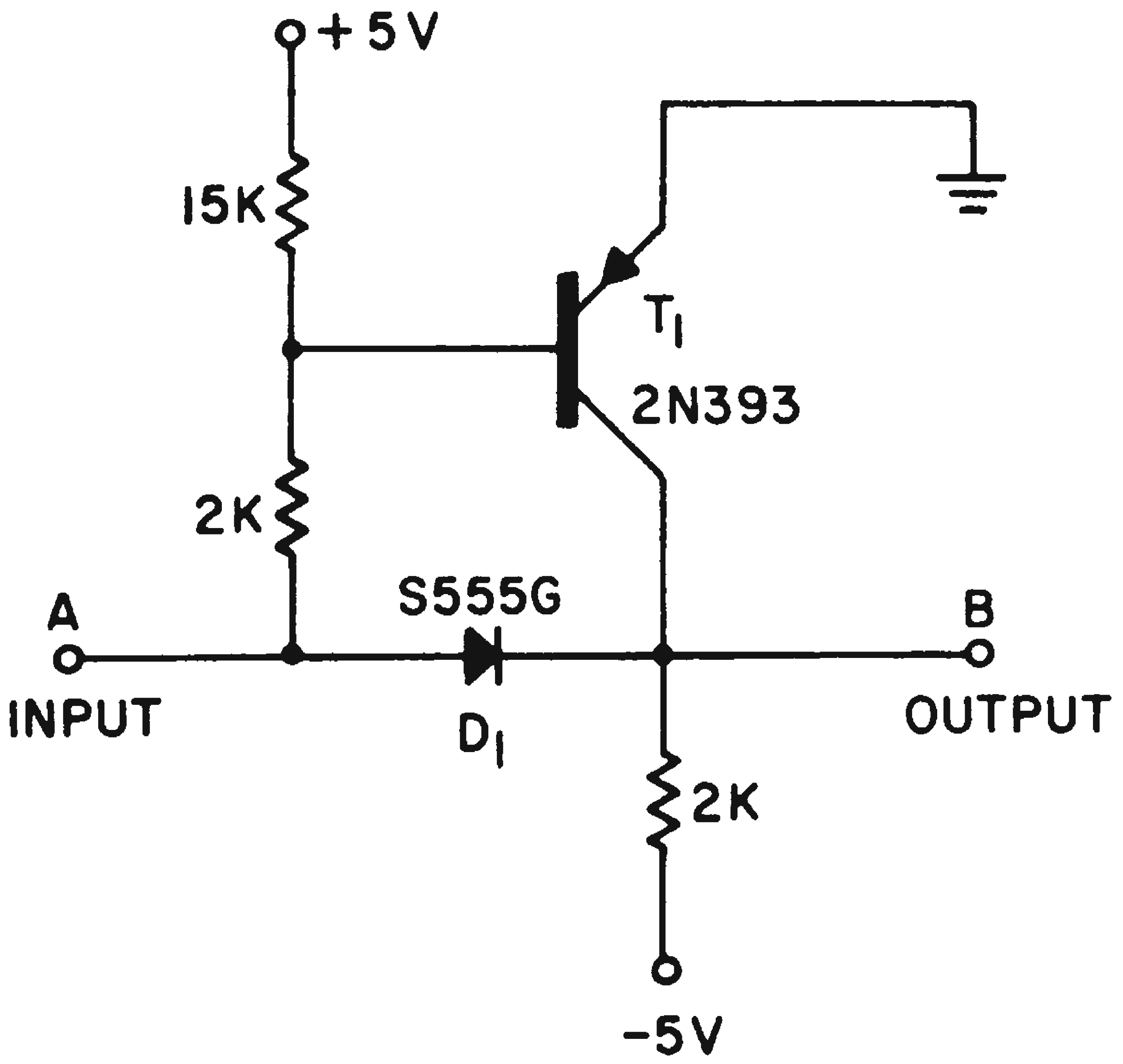

Fig. 1. Fast (0.05 μsec) pulses are generated in this transistor-trigger circuit by cutting off the diode with a negative input pulse.

A capacitor-resistor differentiator is often used for this purpose, but if the trigger duration is to be less than 0.1 μsec, the pulse source may be overloaded and the trigger output amplitude will depend on the rise time of the input pulse.

The circuit of Fig. 1 generates a negative trigger pulse when the input pulse goes negative. The duration of the trigger pulse is dependent upon the resistor input network and the delay and rise time of T_1. With the parameters shown, the output pulse duration is only 0.05 μsec.

The operation of this circuit is as follows: When the input to the trigger circuit is zero volt, transistor T_1 will be biased off, and diode D_1 will pull the output B up to —0.4 v which is the drop across the diode. When input A goes negative, the 2 K resistor tied to —5 v will pull point B negative several volts, since T_1 has previously been cut off. With A negative, transistor T_1 will soon start conducting and pull B up to —0.1 v, which is the drop across the conducting transistor.

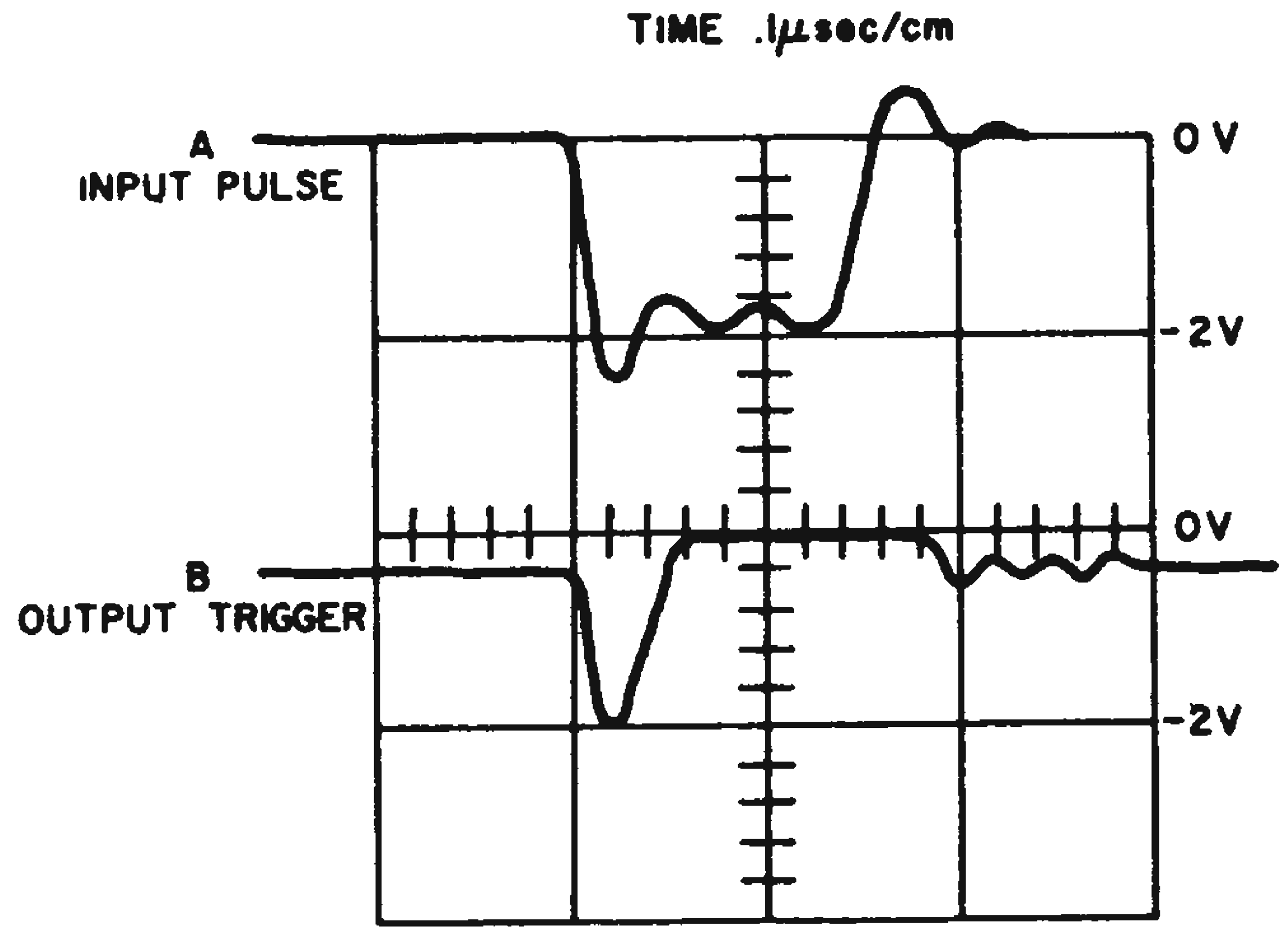

Fig. 2. Sketches taken from an oscilloscope show the 0.2-μsec input pulse (a) and the resultant 0.05-μsec output pulse (b).

Other transistors and diodes could be used, but the 2N393 micro alloy transistor and the S555G diode were used because of their speed and low voltage drops.

The characteristics of this circuit are shown in Fig. 2. The trigger duration is 0.05 μsec, and the amplitude is 2 v.

This circuit is also useful for determining the speed of a combination of input network and transistor. The width of the output pulse is the effective turn-on time of this combination.

Forrest Salter, Argonne National Laboratory, Applied Mathematics Div., Argonne, Ill.

Varying Multivibrator Bias Changes Output Frequency

By biasing a free-running multivibrator to controlled voltage levels, it can be made to have several interesting modes of operation. The additional circuitry required is indicated in the figure.

The operating frequency of a multivibrator is partly dependent on the voltage to which the grid-return resistor *R* is connected. Any variation in this voltage will change the frequency. Thus, instead of connecting *R* to a constant potential, it is returned to the coupled output of a one-shot multivibrator. With this arrangement, the free-running multi can oscillate in any one of 3 modes.

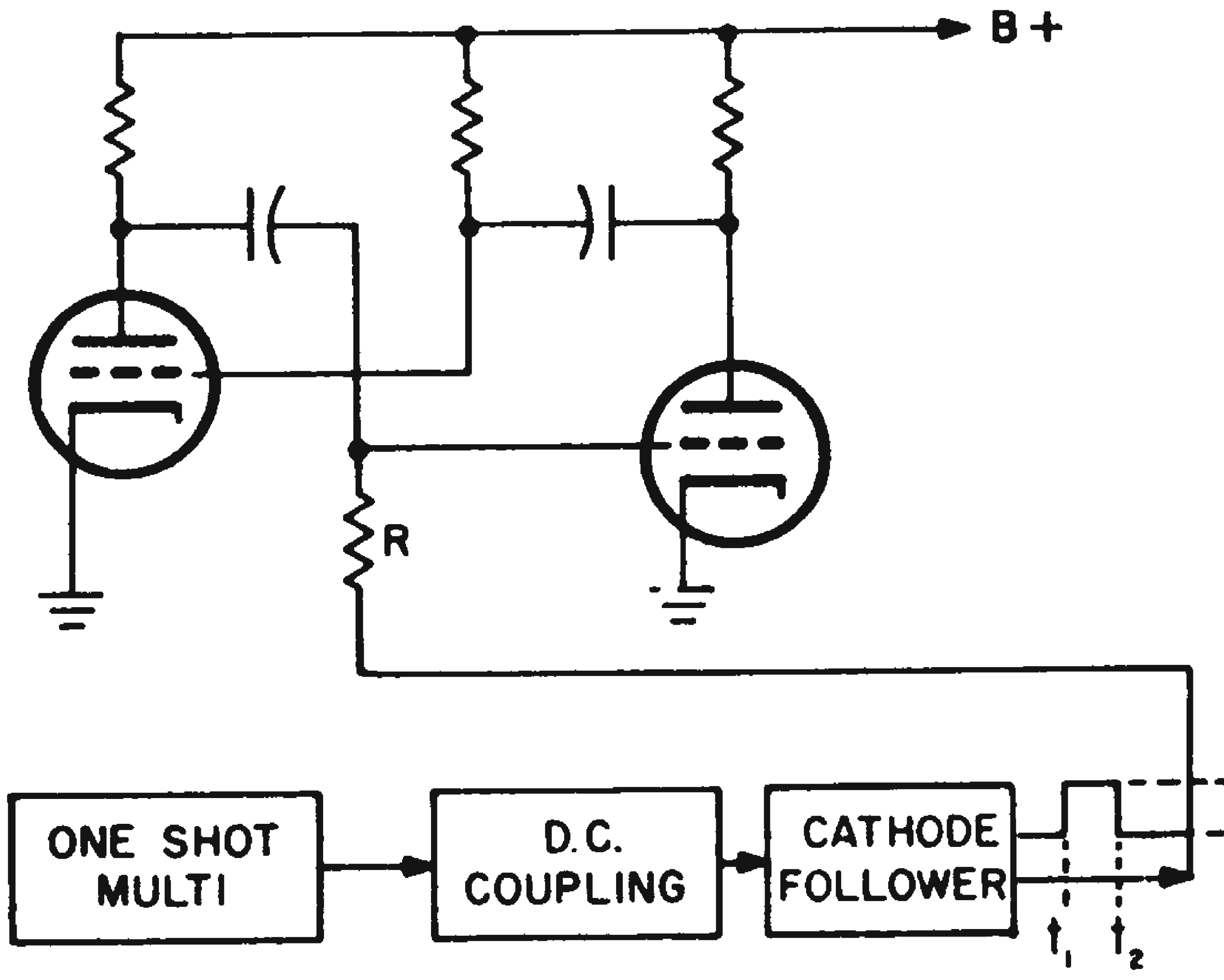

The output frequency of a free-running multivibrator can be varied by adjusting the voltage to which the grid resistor *R* is returned.

***Mode** 1*—Output pulses for a fixed time interval. The cathode follower output is adjusted so that at E_2 tube T_2 is cut off and E_1 is any voltage that will cause the multi to oscillate. The magnitude of E_1 depends on the frequency desired. The free-running multi will oscillate only during the time $t_1 < t < t_2$.

***Mode** 2*—Output pulses at varying frequencies. E_1 and E_2 are two different voltage levels. This permits the multi to oscillate at 2 different frequencies. The duration of each frequency is adjusted by varying the pulse duration and repetition rate of the output.

***Mode** 3*—Multi-frequency oscillations. For this mode, the one-shot multivibrator is replaced by a diode storage counter of any number of steps. Each step voltage will cause the multivibrator to operate at a different frequency.

Unfortunately, the equations for the multivibrator operation (period, frequency, etc.) are involved and cumbersome. However, the ideas given here can be used as a beginning point for a laboratory breadboard design.

Irving Bayer, Design Engineer, Budd-Lewyt Electronics, Inc., Long Island City, N. Y.

Zener Diodes Trigger Time-Sequenced Pulses

Separate, time-sequenced signals, generated from a single trigger source, can be obtained from the Zener diode circuit shown in the figure. The desired delay times between signals are set by matching the ratings of the Zeners to the RC charge characteristics of each branch.

The time constants of the branches are approximately related by:

$$T_A \approx 3T_C \text{ and } T_B \approx 2T_C$$

These simple relations exist because the dc source voltage (300 v) is much greater than any of the Zener voltages. The circuit parameters shown are for relatively long delay times (such as used with relay triggering applications). However, fast pulses and short delays can also be obtained.

Adjustments in T_A, T_B, and T_C would have to be made for precise timing that depended, for instance, on the trigger-voltage sensitivity of the external circuitry. If this minimum triggering voltage were V_t, corresponding to T_t, the triggering times of outputs *A*, *B*, & *C* would then be:

$$T_A + T_t,\ 2/3\ T_A + T_t, \text{ and } 1/3\ T_A + T_t.$$

For a linear approximation T_z, any Zener time is given by

$$E_z/_E = T_z/_{RC} \text{ and } T_z = E_z/_E\ (RC).$$

From these relations any desired delay time may be determined from a low Zener voltage with respect to capacitor voltage. When higher Zener voltages are used, or a lower capacitor charging voltage, the linear time approximation is no longer applicable and the exponential nature of the capacitor voltage must be considered.

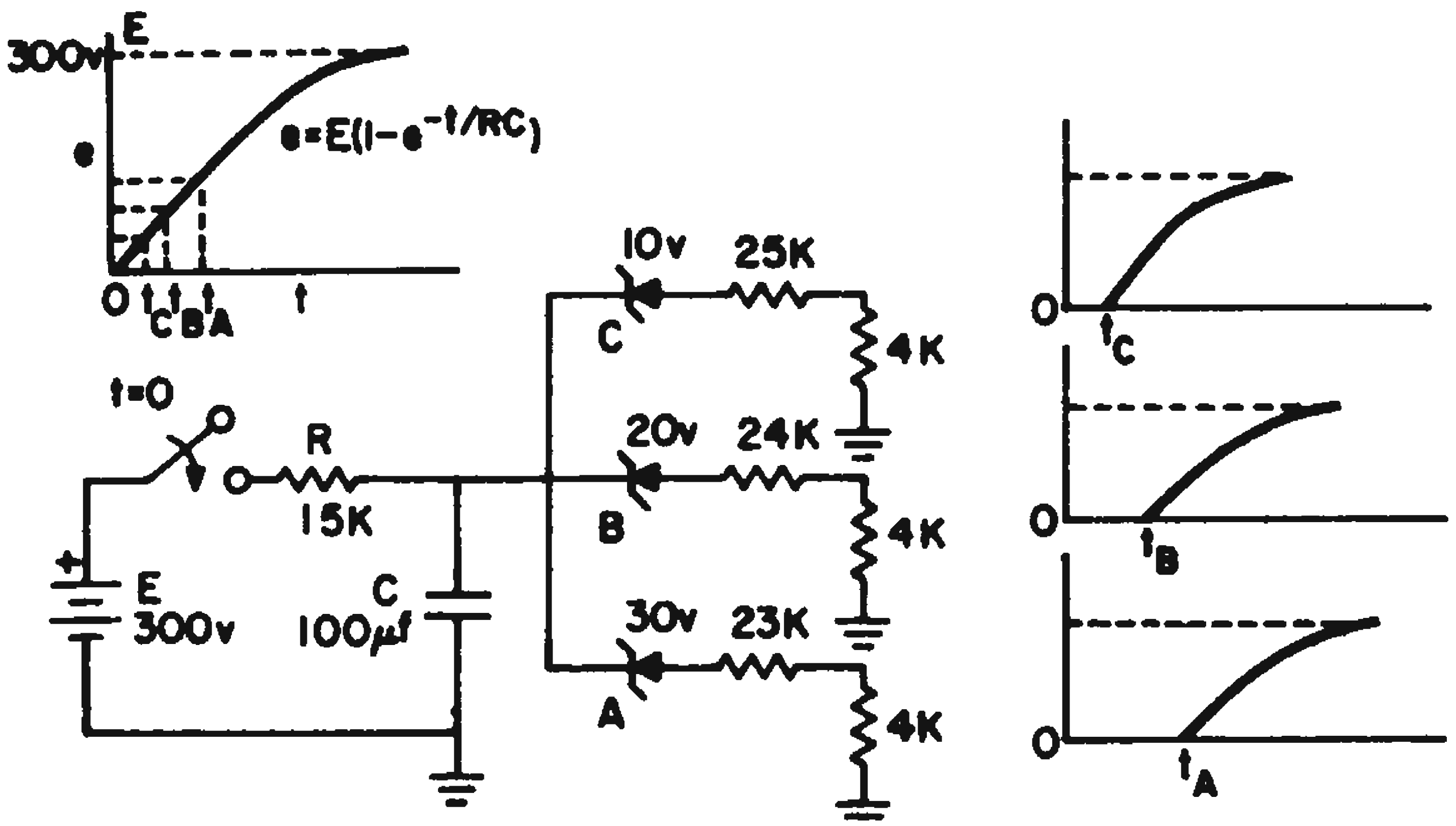

Time-sequenced signals are obtained from a single source with this Zener diode trigger circuit.

In general $e = E\ (1 - \varepsilon^{-t/RC})$ and $e/_E - 1 = -\varepsilon^{-t}/_{RC}$; thus: $ln\ (1 - e/_E) = -t/_{RC}$.

If the Zener voltage E_z exists, then:

$$T_z = [\ -RC]\ [ln\ (1 - E_z/_E)]\ \cdot$$

George B. Smith, Electrical Engineer, High Voltage Engineering Corp., Burlington, Mass.

Solid State Relay Varies Operational Amplifier Gain

The gain of an operational amplifier can be rapidly changed by electronically switching different resistors into the feedback loop. Switching is accomplished by using the high forward conductance and high reverse resistance characteristics of silicon diodes. Gain changes can be achieved with dissipations of less than 600-μw. This compares with the 200-mw a high sensitivity, electromechanical relay would require.

Fig. 1 shows an operational amplifier with negative feedback applied through R_{fb1}. The passive electronic relay is contained in the dotted rectangle. The closed loop gain (CLG) of the circuit is given by:

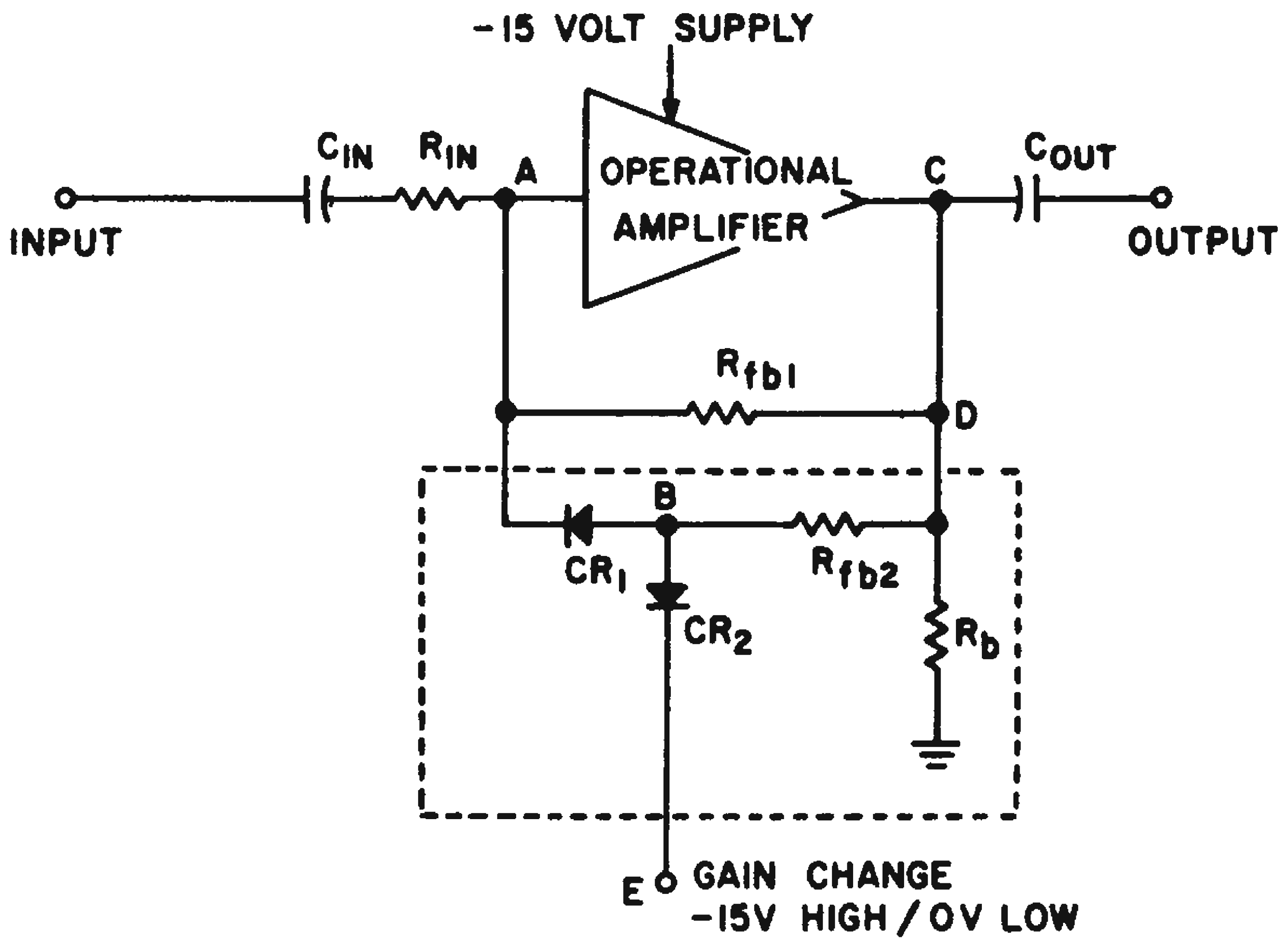

Fig. 1. Operational amplifier gain can be varied by using silicon diodes to switch paralleling feedback resistors in or out.

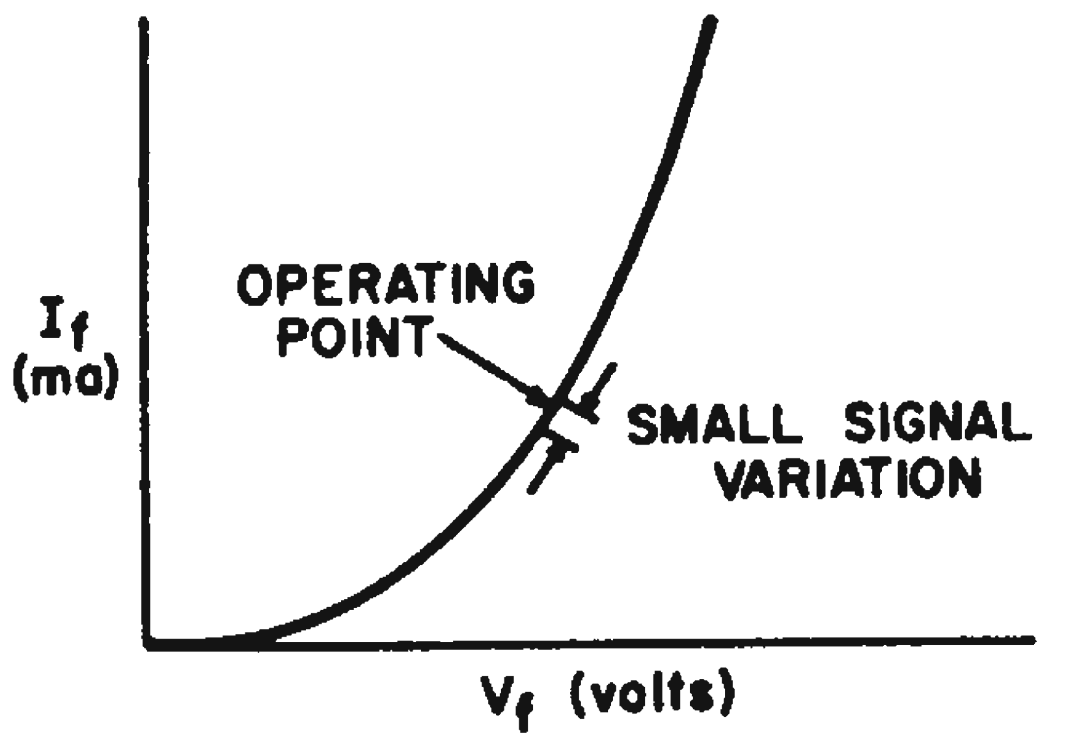

Fig. 2. Small signal operation of diodes keeps their forward resistance almost constant in the operating range.

$$CLG = \frac{R_{fb}}{R_{in}}$$

where R_{fb} is the effective value of the feedback resistances.

By varying the bias voltage applied at E, the silicon diodes will switch in, or switch out, resistors paralleling R_{fb1}. Thus, the overall amplifier gain can be changed in step with the voltage at E.

To understand the circuit operation, let us assume that the voltage at A is —6 v. For high stage gain point E is set at —12 v. These voltages forward bias CR_2 via R_{fb2} and R_{b1}, and reverse bias CR_1. Since the back resistance of these diodes is much greater than R_{fb1} and R_{fb2}, loop BD is effectively open. Gain of the operational amplifier is:

$$CLG = \frac{R_{fb1}}{R_{in}}$$

For low gain, point E is set at 0 v. This forward biases CR_1 via R_b and R_{fb2}, and reverse biases CR_2. The gain of the amplifier is now:

$$CLG = \frac{\dfrac{R_{fb1}\,(R_{fb2} + R_{cR1})}{R_{fb1} + R_{fb2} + R_{cR1}}}{R_{in}}$$

Where R_{cR1} is the diode forward resistance.

Gain-Change Transient Can Be Held Small

The speed of gain change is limited by (1) the diode frequency response and (2) the closed loop amplifier frequency response. With a fast switching diode, the amplifier will be the limiting factor on the speed. However, proper design can make the gain change transient extremely short.

Placing the diodes at the small-signal input of the amplifier minimizes the effect of their nonlinear resistance characteristics. This is illustrated by the silicon diode's forward characteristic shown in Fig. 2. Under small signal conditions the variation in slope around the operating point is negligible. This also allows greater freedom in the choice of biasing voltages at A and E. Experiment has shown that the —12 v at E could be as high as —8 v, and the 0 v state could be as low as —3 v with very slight difference in gain from the 12 v/0 v levels.

Note that resistor R_b is much smaller than R_{fb} or R_{fb2}. It only serves as a dc biasing path for the two diodes.

Possible application of the gain switching principle are numerous. Basically, it can be used to electronically change or modulate stage gain as a function of time or some other variable. A suitably programmed voltage can change the gain at speeds up to 5mc.

George Shaheen, Senior Development Engineer, Bendix-Pacific Div., Bendix Aviation Corp., North Hollywood, Calif.

Novel Multivibrator Circuit Uses Gated Beam Tube

Combining a gated-beam vacuum tube with two resistors and a capacitor yields a novel and useful multivibrator circuit. Usually applied as a limiter or fm discriminator, a 6BN6 connected as in Fig. 1 will provide an astable output. With some modification the circuit will be monostable. The filament power required is less than 1 w.

Since the cathode current in the 6BN6 is essentially constant regardless of the grid voltages, plate current can only increase at the expense of accelerator current.

As the grid voltage increases, the plate current increases and the accelerator current decreases. This increases the accelerator voltage. Since the accelerator voltage is in phase with the grid voltage, if the accelerator is capacitively coupled to the grid, positive feedback will occur. A 5.6 K resistor provides voltage gain from the grid to the accelerator. Therefore, regeneration occurs and the result is astable vibration.

A plate resistor can be inserted if a negative output pulse is desired.

For greater plate output the quadrature grid is connected to the plate as shown in Fig. 2 and a higher voltage is used.

A univibrator, or one-shot multivibrator can be obtained by inserting a cathode resistor (470 ohms) so that the voltage across it is sufficient to bias the tube to plate current cutoff. When this occurs, all the cathode current, as previously mentioned, travels to the accelerator. When a positive trigger is applied to the grid, the univibrator will produce an output pulse.

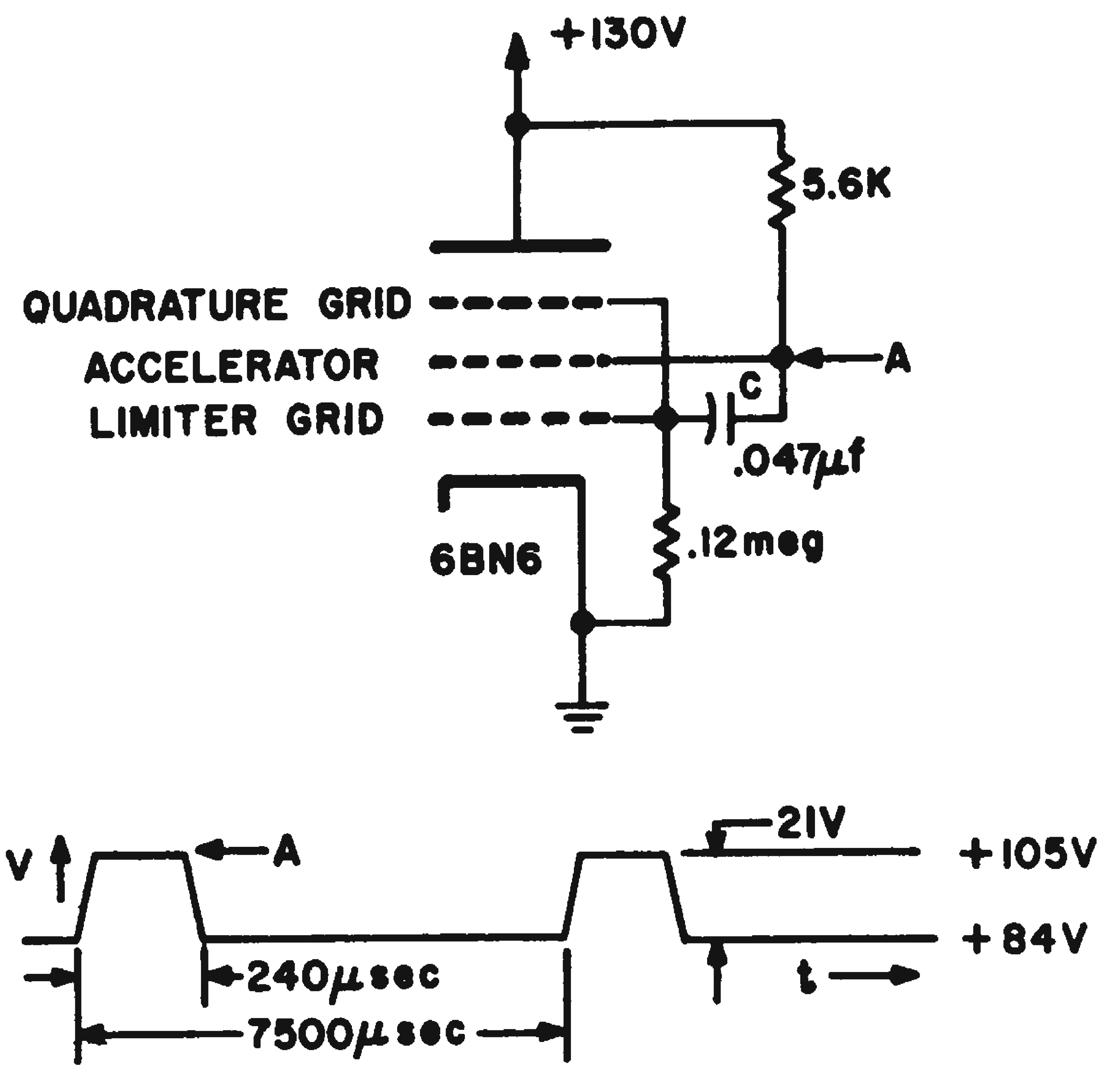

Fig. 1. Positive-going astable output is taken from the accelerator of the 6BN6 tube.

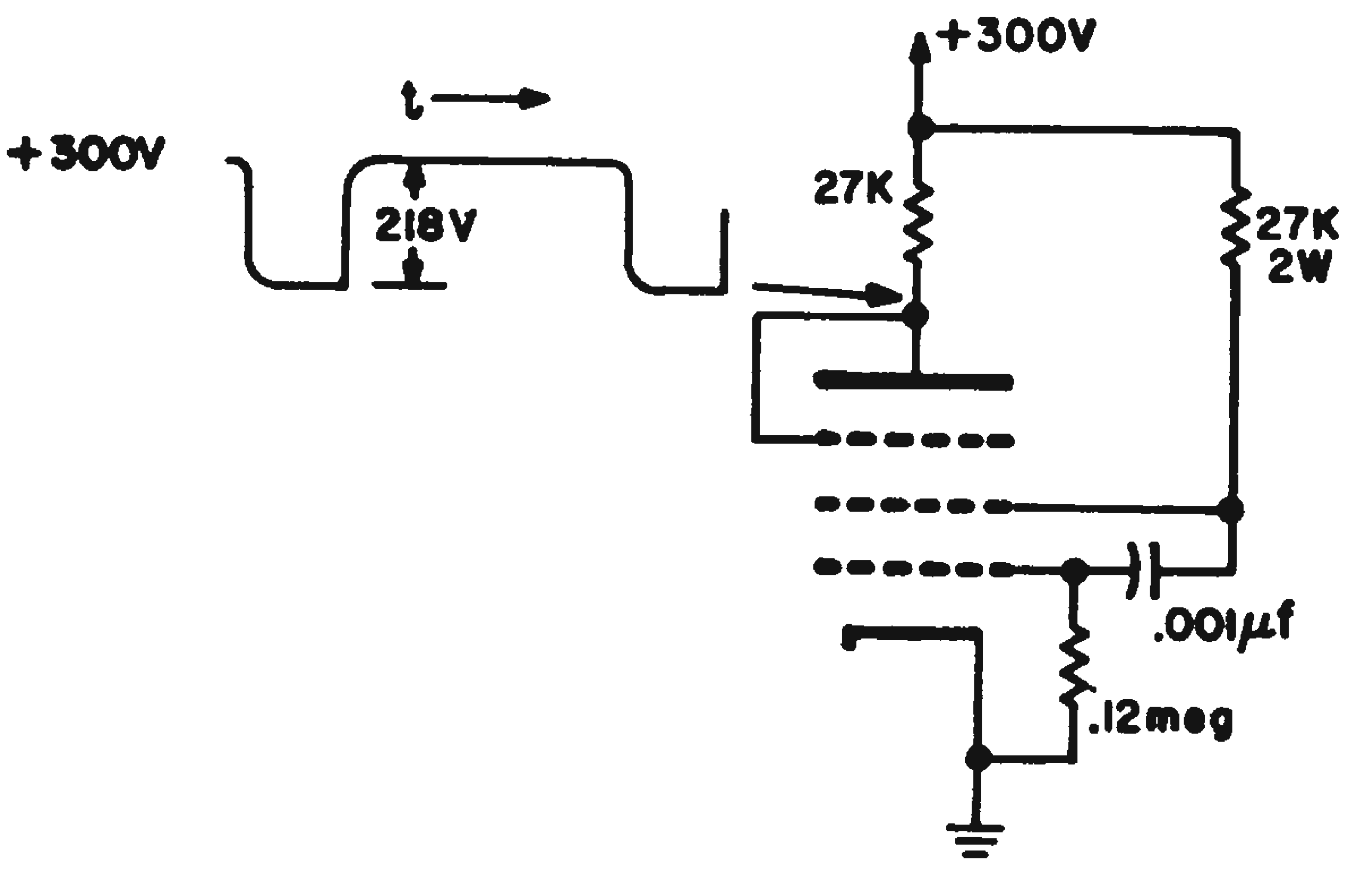

Fig. 2. Circuit has a greater voltage when the quadrature grid is connected to the plate instead of the limiter.

Incidentally, the waveforms have practically no over-shoot since the grid draws very little current when driven positive.

Alfred W. Zinn, Engineer, Farrand Optical Co., Inc., New York, N.Y.

Two Relay Contacts Clear Integrator For Rapid Operation

In repetitive tests conducted with an integrator of high linearity, it was necessary to clear the integrator for the next run as quickly as possible without interfering with its linearity. Relay contacts connected directly across the capacitor will rapidly discharge the integrator. However, the leakage across the opened contacts affects the linearity during integration.

A scheme commonly used in analog computers for discharging an integrator is shown in Fig. 1. During integration, the relay contacts are closed, effectively placing R' and R'' across the amplifier input and output respectively. In this way, R' and R'' do not interfere with the operation, if their values are appropriately chosen. Thus, the problem of relay leakage is avoided.

Using this circuit arrangement, the time taken to discharge the integrator was several seconds with the values of circuit components required in the application: time constant = 1 sec, $R = 1$ meg, $C = 1$ μf.

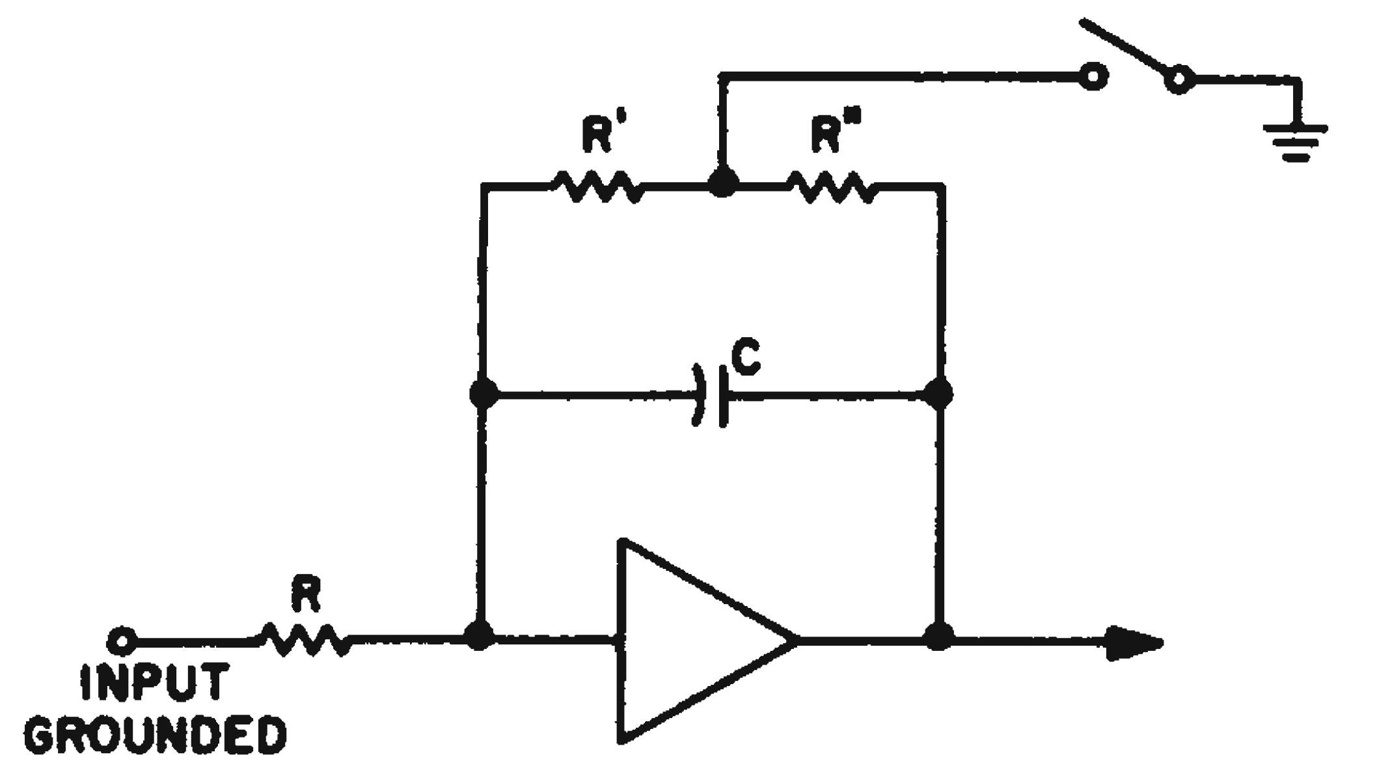

Fig. 1. During integration relay is closed; R' and R'' appear across input and output respectively. However, discharge time constant (with relay open) is long.

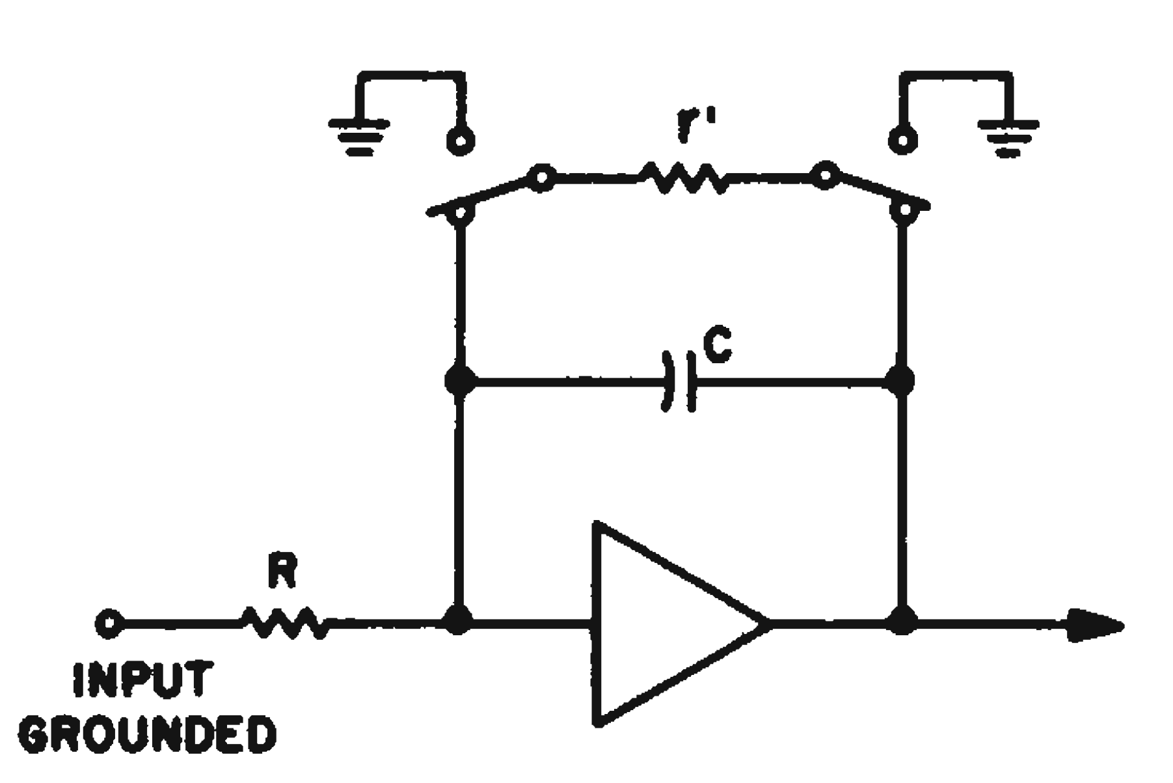

Fig. 2. Fast (100 μsec) clearing can be obtained with two relays. Contacts are open during integration, with relay leakage appeared across input and output.

With a second relay as shown in Fig. 2, a discharge time of about 100 μsec was obtained without degrading the integrator linearity. During integration, any leakage across the relays is placed across the input and output of the amplifier and not across the capacitor. To keep the discharge current within the relay contact rating, a small resistor *r′* was included in the shorting link.

Bernard F. Wadsworth, Research Engineer, Australian National University, Canberra, Australia.

Holding Resistor Allows Narrow Pulse Triggering of SCR Circuit

When using a silicon-controlled rectifier, scr, as a switch in an inductive circuit, Fig. 1, the exponentially increasing load current did not reach the minimum "holding" level at the end of the triggering pulse. By adding a resistor across the inductance, shown dotted in the figure, the load current quickly reached the level required for continued rectifier conduction.

In our actual circuit application, the maximum width of the trigger pulse was 2 μsec. The load was a high-inductance solenoid, drawing 250 ma steady state. Because of the slow current buildup, a much longer trigger pulse was needed for turn-on of the rectifier, Fig. 2. With the holding resistor across the solenoid, the additional resistive component of load current allowed the pnpn switch to read the holding current level before the trigger pulse terminated. The value of the holding resistor is given by:

$$R_H = \frac{V_{CC}}{I_H \times \mathrm{SF}}$$

where V_{CC} is the supply voltage, I_H is the holding current and SF is any desired safety factor.

The only expense was a few per cent increase in the total load current.

We have a number of such circuits currently in use in some of our data processing equipment. In many cases reliable operation has been obtained with trigger pulses as short as 0.6 μsec.

John V. McMillin, Project Engineer, Measurement Research Center, Iowa City, Iowa.

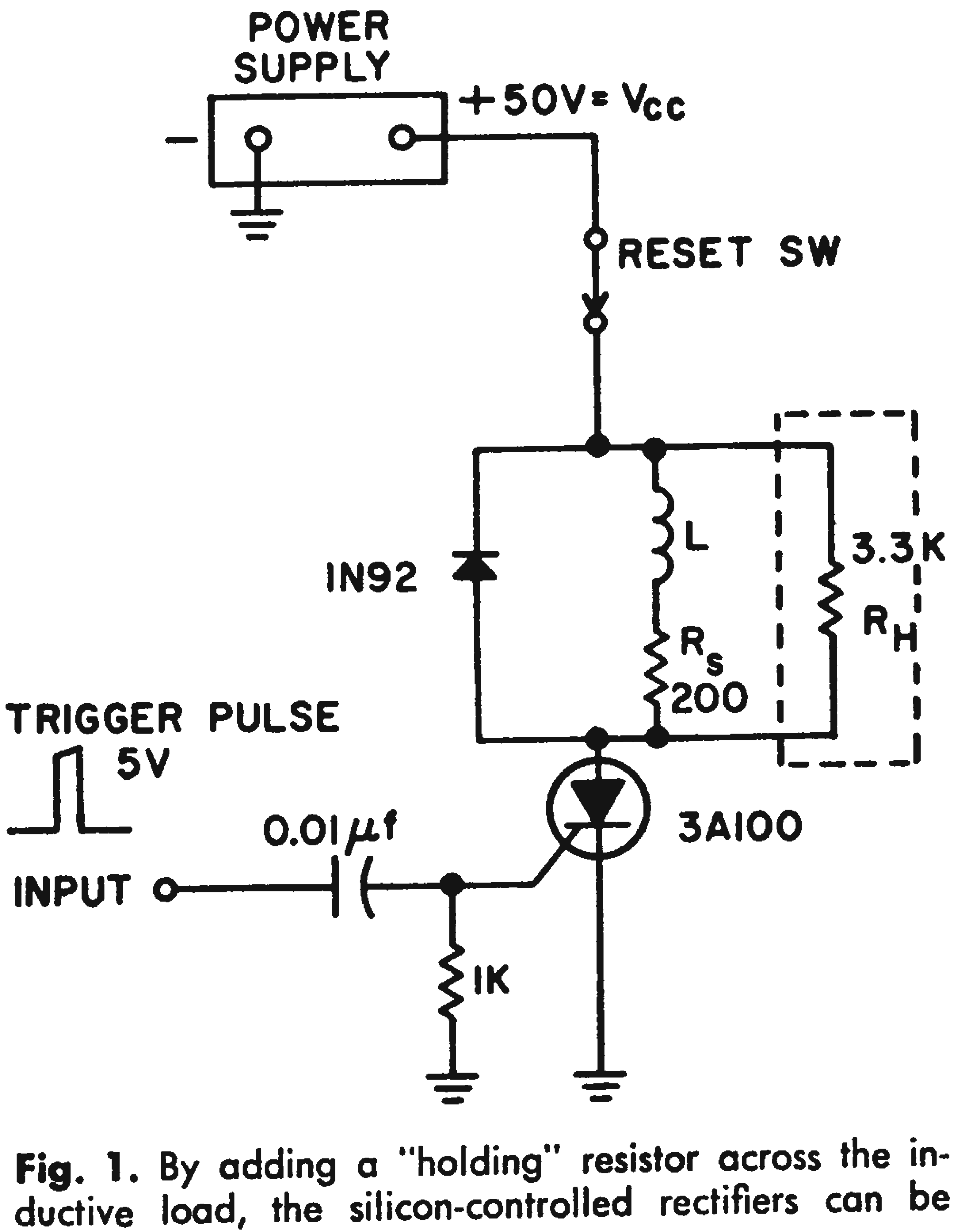

Fig. 1. By adding a "holding" resistor across the inductive load, the silicon-controlled rectifiers can be fired with very narrow pulses.

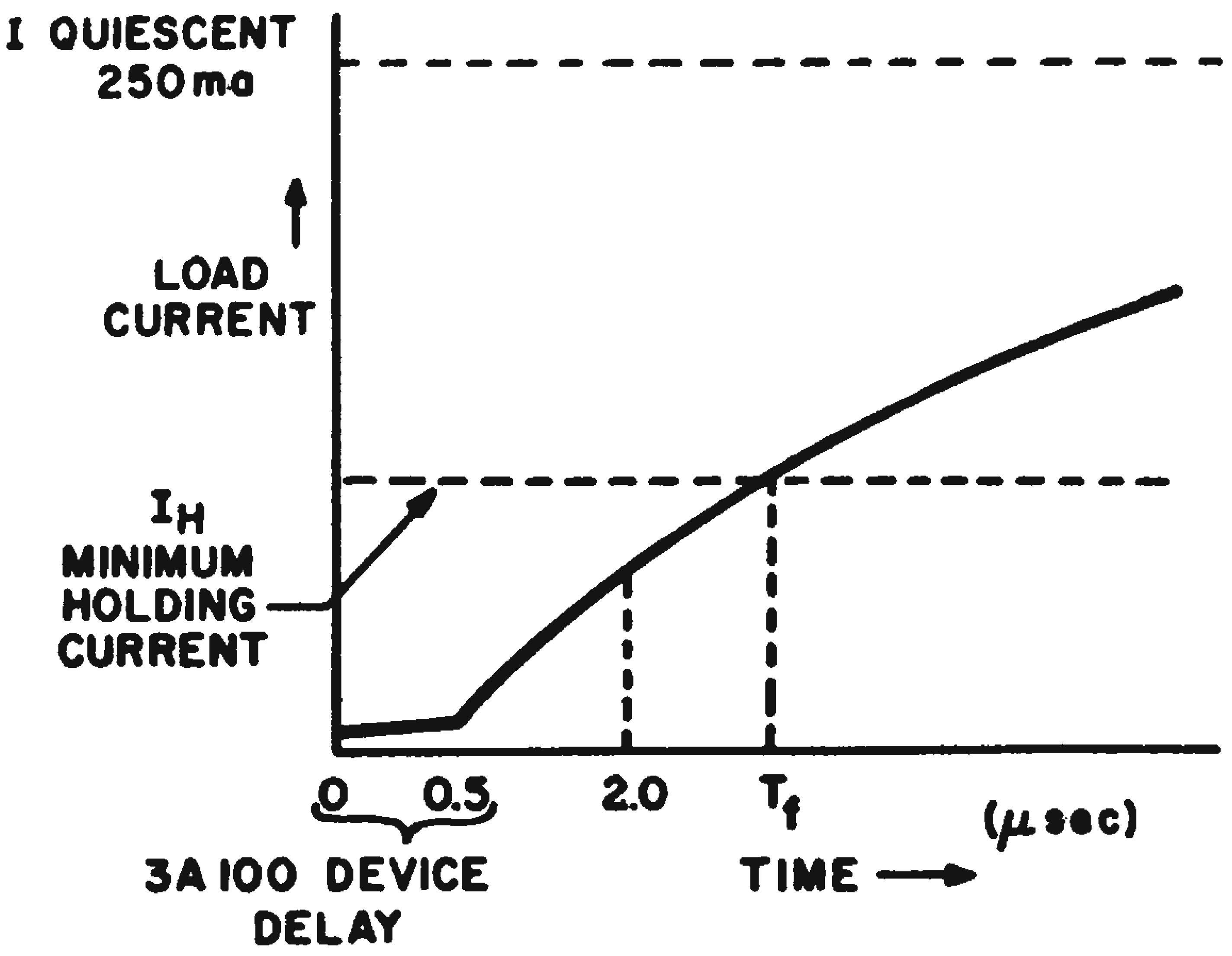

Fig. 2a. Because of inductive current build-up, a wider pulse width is necessary to keep SCR turned on.

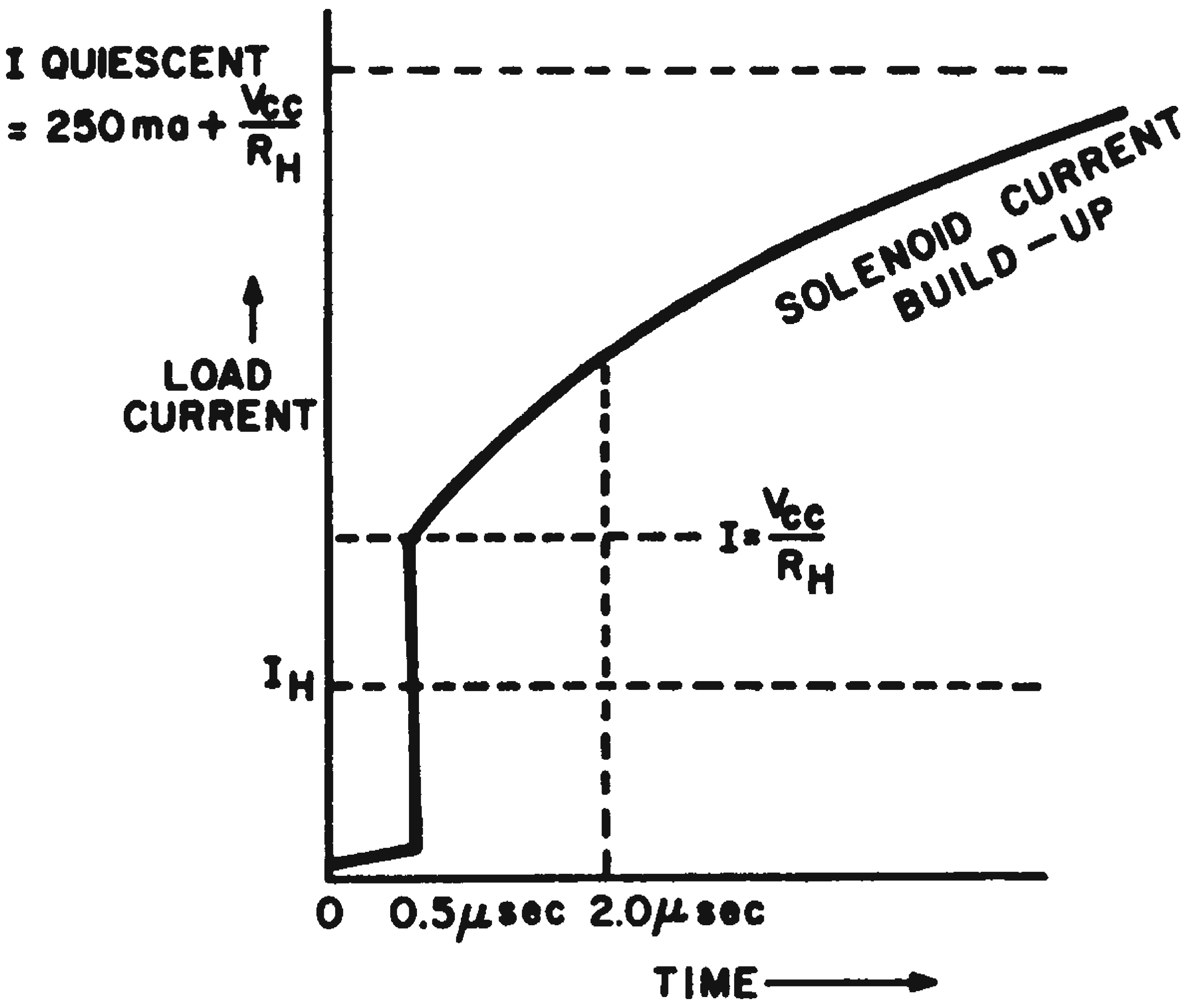

Fig. 2b. With holding resistor load current increases, quickly passing the minimum conduction current level.

Trigger Pulse Generates Two Separate Outputs

A circuit was required which, after receiving an input trigger, would produce two separate pulses in sequence. These pulses were to be used to drive a cold cathode counter tube. The circuit we designed is shown in the figure.

Initially *Q1* and *Q2* are biased "on". A negative input pulse turns *Q1* "off". Capacitor *C1* then charges to B^+ through *R1* and the base of *Q2* with a time constant *R1C1*. This positive going signal is transmitted to the base of *Q2*. Since *Q2* is already conducting no change takes place at the collector of *Q2*.

When the input pulse passes, *Q1* is again turned on. The negative signal at the collector of *Q1* is transmitted to the base of *Q2*. This turns *Q2* off. Capacitor *C1* now starts to charge to B^+ through *R2* and the saturation resistance of *Q1*. It does so with a time constant of approximately *R2C1*. When it reaches 1/2 v it turns *Q2* on again and the circuit returns to its quiescent state.

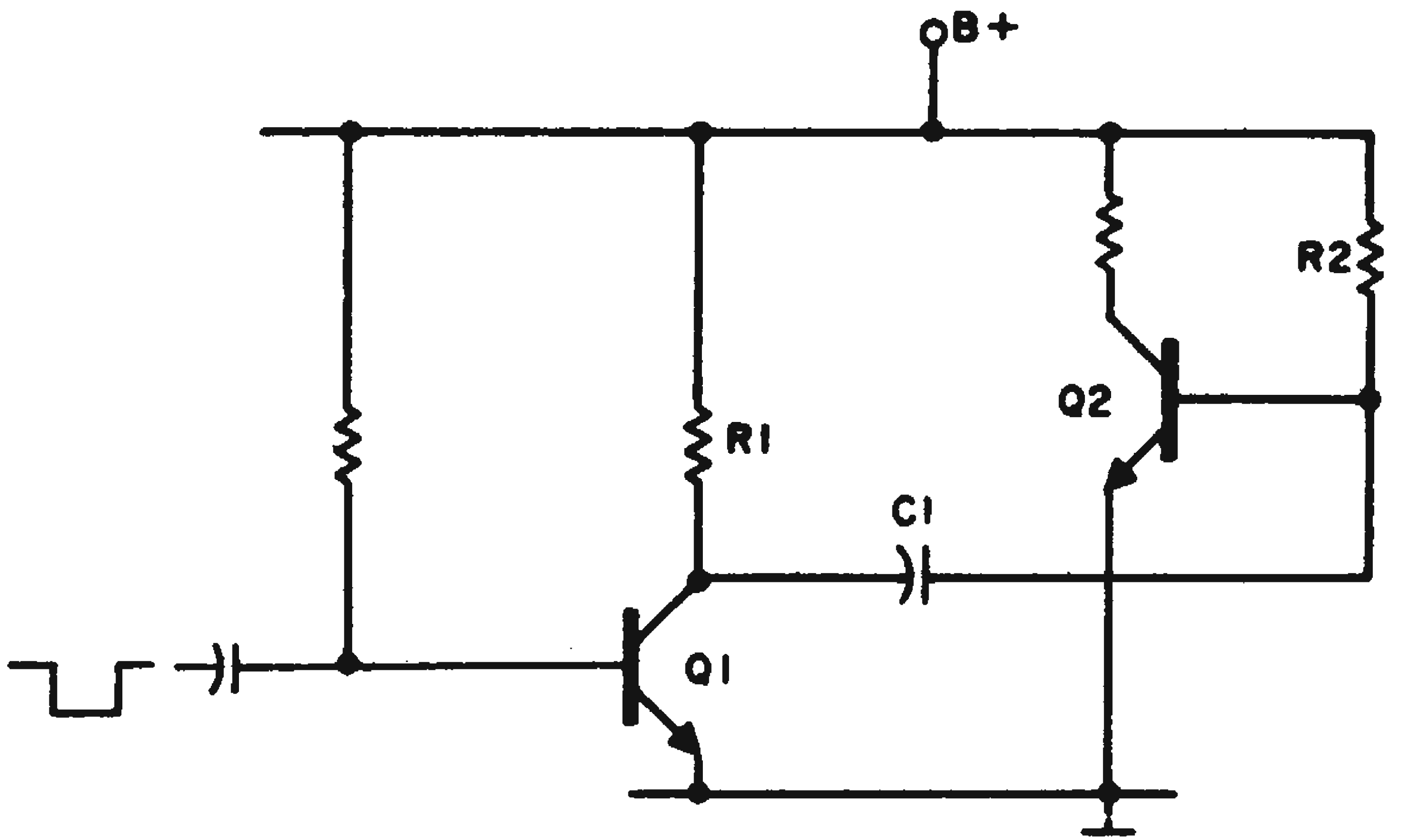

Negative trigger generates separate pulses of the transistor collectors. Variable delay between these pulses can be obtained by inserting RC elements at base of *Q1*.

Thus, an output pulse is generated at the collector of *Q1* as the input pulse begins, and a second pulse is generated at the collector of *Q2* as the input pulse terminates.

The pulse at *Q2* can be delayed from the input pulse by adding a time constant element, such as an RC combination, at the base of *Q1*.

Gordon Silverman, Senior Electrical Engineer, Loral Electronics Corp., Bronx, N. Y.

Pulse Circuit Provides Sharp, Variable Pulse Delays

Here is a circuit we designed which yields a sharp, unattenuated and accurate pulse delay on either the leading or trailing edges of the pulse. The delay times of the circuit, Fig. 1, depend upon the time constant *RC* and the voltage factor *K*.

Assuming zero source impedance and a very high input impedance for the emitter-follower, a circuit analysis shows that the delay times, τ_1, and τ_2, of the edges of the pulse are given by:

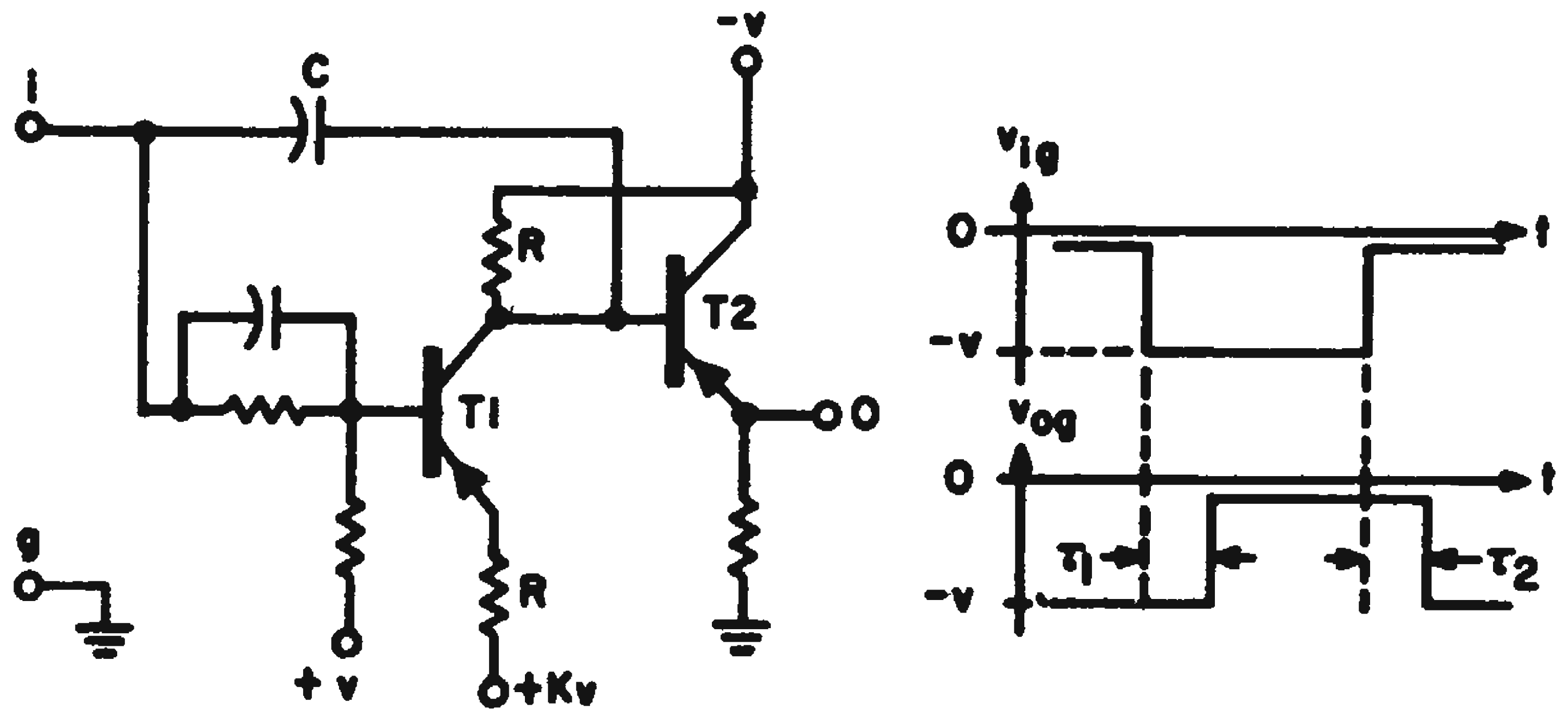

Fig. 1. Delay circuit can be adjusted for variable delays of pulse edges. With $\tau_1 = \tau_2$, factor *K* equals 1.83 and the input pulse is not distorted.

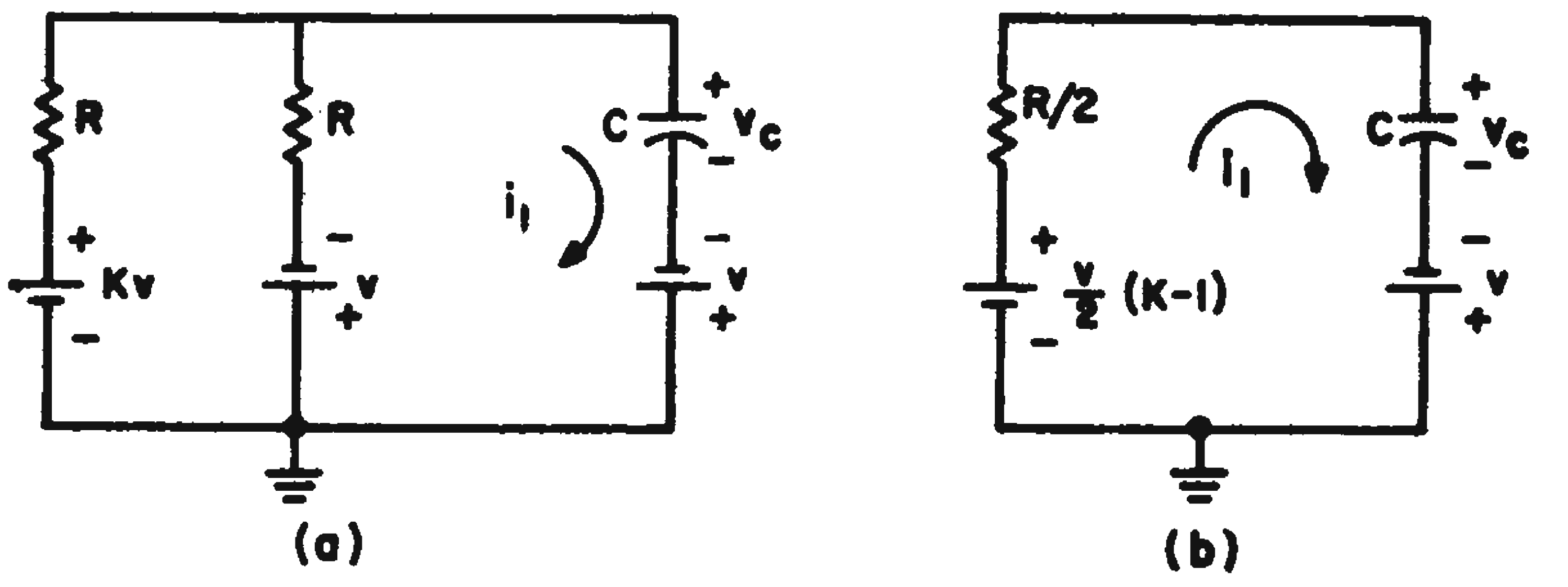

Fig. 2. (a) Equivalent charging circuit for capacitor C is used to derive expression for τ_2. (b) Circuit of (a) can be further reduced by combining voltage sources *KV* and *V*.

$$\tau_1 \cong \frac{RC}{2} \ln \frac{K+3}{K-1} \qquad (1)$$

$$\tau_2 \cong RC \ln \frac{K+3}{2} \qquad (2)$$

These equations are derived from the following considerations:

When v_i goes to $-V$, transistor T_1 saturates with low V_{ce}, and the equivalent charging circuit for capacitor *C* is as shown in Fig. 2. From Fig. 2b it is seen that:

$$i_1 = C\,\frac{dv_c}{dt} = \frac{\frac{V}{2}\,(K-1) - v_c}{\frac{R}{2}} \qquad (3)$$

Integrating Eq. 3 and solving for t_1, yields:

$$t_1 = \frac{RC}{2}\ln\left[\frac{-\frac{V}{2}\,(K+3)}{v_c - \frac{v}{2}\,(K+1)}\right] \qquad (4)$$

since at $t_1 = 0$, $v_c = -V$.

When $t_1 = \tau_1$, the capacitor voltage has reached the value V and T_1 is cut off. Thus Eq. 3 reduces to Eq. 1.

Eq. 2 is derived from the equivalent discharge circuit of capacitor, C, taken as v_i goes to ground at the end of the input pulse.

For equal edge-delays, that is, for an undistorted pulse, Eqs. 1 and 2 are set equal. This yields:

$$\tau_1 = \tau_2 = 0.88\,RC \text{ and } K = 1.83$$

The constant K may be adjusted to compensate for the asymmetrical effects of storage time and stray capacitance. A similar analysis will yield the relationships for a nonzero source impedance.

David Borkum, Engineer, Lehigh Design Co., Newark, N. J.

Scope Measures Propagation Delay in Asynchronous Logic

Propagation delay time in asynchronous, high-speed logic stages can be rapidly measured with only an ordinary oscilloscope. The use of a pulse generator or sampling scope is not at all necessary.

Most asynchronous logic circuits, whether they be DTL, RTL, DCTL, etc., are essentially inverters, with the general configuration shown.

To measure the propagation delay time in a cascaded series of such stages, a jumper wire is connected from the output of the n^{th} stage to the input of the 1^{st} stage. With n constrained to be an odd number, a wavefront is initiated as soon as the jumper is added. This wavefront is self-sustaining. This is because when it propagates through the chain a second time, its polarity is opposite to that of the first pass. The wavefront circulates endlessly through the chain at a rate exactly determined by the propagation delays through each stage.

The output of any given stage is a square wave whose period T, or frequency f, can be measured with either an oscilloscope or electronic counter. By inspection we see that:

$$f = \frac{1}{T} = \frac{10^9}{2 \cdot tpd \cdot n} \qquad (1)$$

By measuring the frequency of the square wave we can now substitute in Eq. 2 and solve for the propagation delay per stage.

where f = frequency, in cps
T = period, in sec
n = number of cascaded stages
tpd = propagation delay/stage, in nsec

Rearranging Eq. 1 we get

$$tpd = \frac{10^9}{2 \cdot f \cdot n} \qquad (2)$$

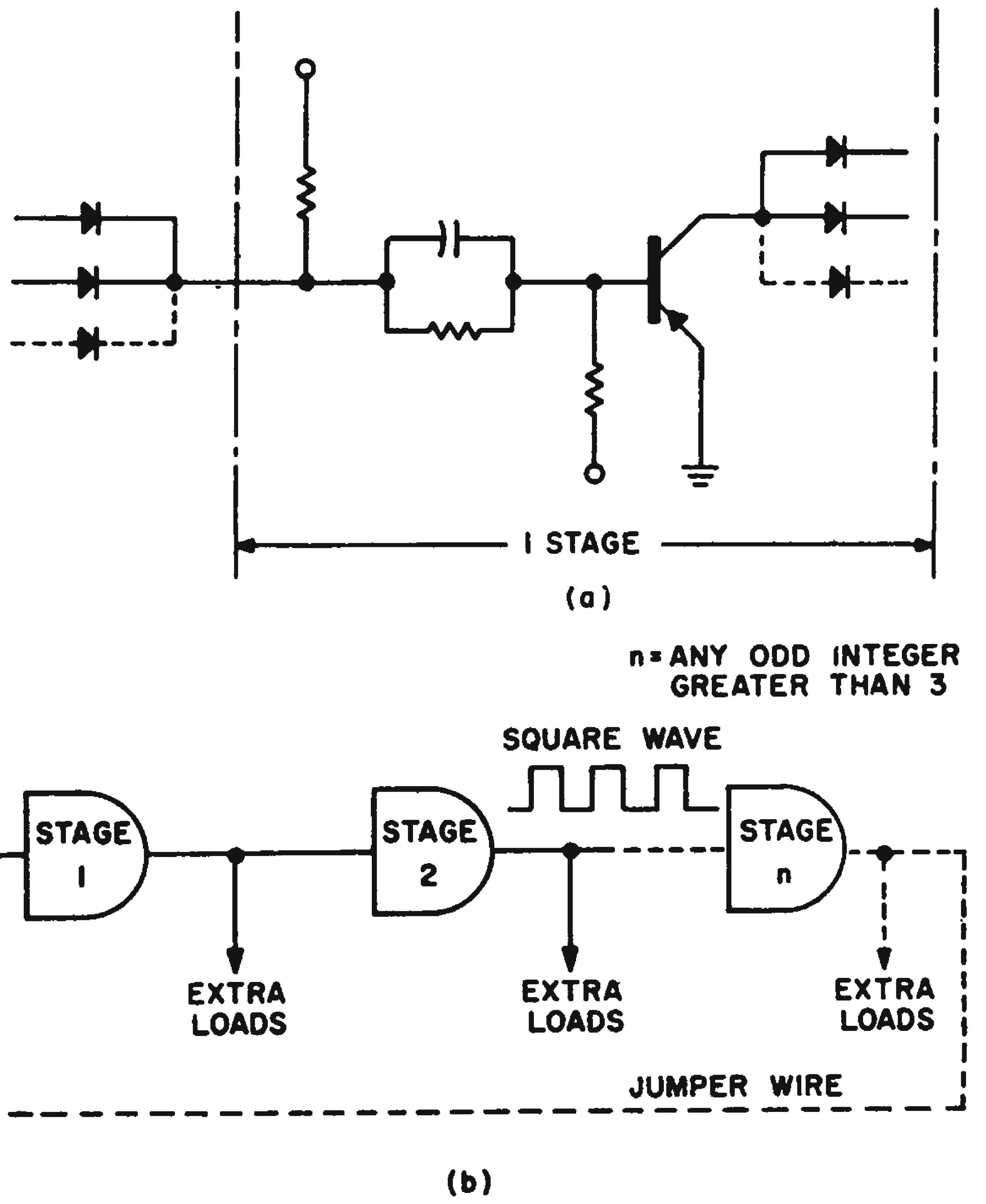

Propagation delay time in asynchronous logic stages can be measured by connecting output to input and observing recurring square wave on an oscilloscope. (a) Typical DTL stage, (b) cascaded stages shows jumper wire, connecting output to input, and the generated square wave.

There are a number of additional advantages to be gained from using this measuring technique. By making n small, very narrow pulses can be propagated through the circuits and the effects studied. By making n very large, high speed phenomena can be studied with conventional test equipment. Also, when placing logic circuits in ovens to make heat runs, the number of leads entering and leaving the chamber can be held to a minimum.

Warren E. Milroy, Supervisory Electronic Engineer, U. S. Navy Electronics Laboratory, San Diego, Calif.

"See-Saw" Multivibrator Uses a Single Capacitor

By ignoring the conventional approach to multivibrator design, it is possible to use a circuit configuration with a number of characteristics, which make it superior, in most applications, to the conventional designs.

The circuit shown has the following advantages:

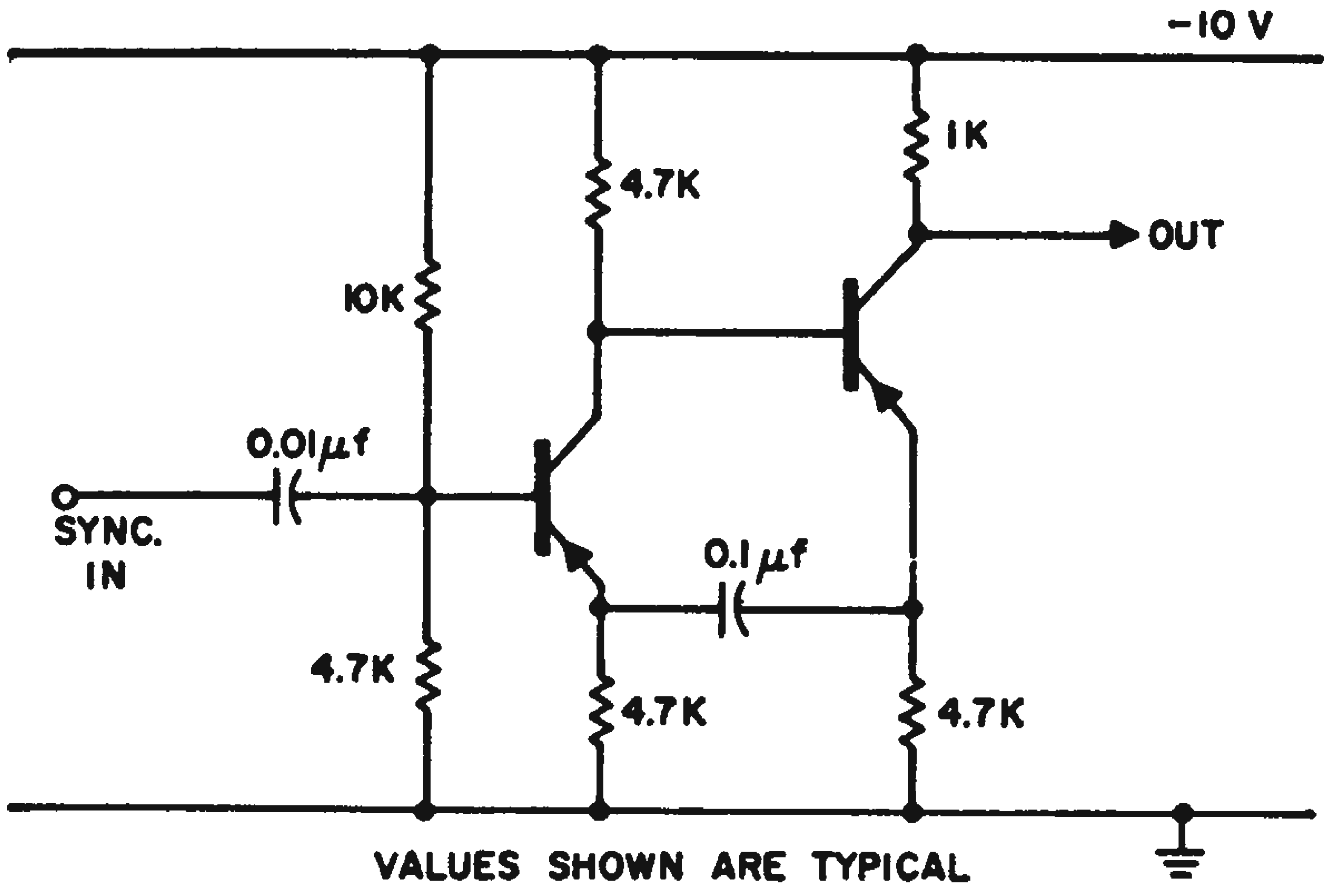

Multivibrator designed with only a single capacitor has several advantages over conventional circuits.

1. It is inherently self-starting.
2. It has an output isolated from the timing circuits.
3. It has an input isolated from the timing circuits.
4. It uses only one capacitor.

The only design requirement for reliable operation is that the resistors be proportioned so that the transistors are not saturated in a dc analysis. (Assume the capacitor is omitted).

Roy P. Foerster, Group Engineer, The Martin Co., Baltimore, Md.

Starter Circuit Prevents Stall of Free-Running Multi

A symmetrical, free-running multivibrator can be protected from stalling at turn-on by adding the AND-gate starter shown. The gate prevents stalling, while in no way interfering with normal, balanced operation after the unit starts oscillating.

In an ordinary multi, stalling can occur when there is insufficient unbalance in the initial rate of change of current in the two halves of the circuit. Purposely introducing an unbalance may be undesirable because of side effects.

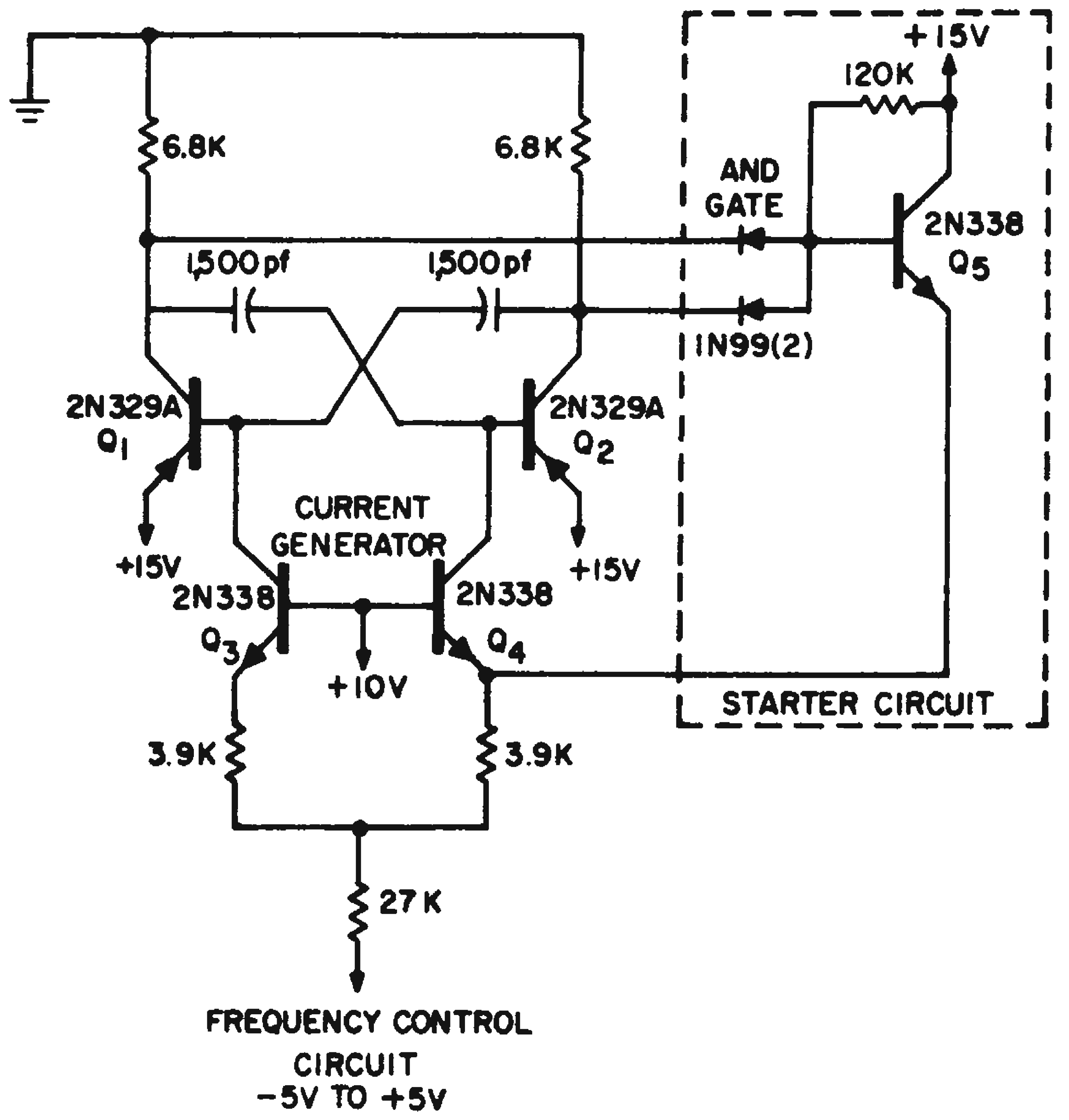

AND gate added to symmetrical, free-running multivibrator guards against turn-on stall without interfering with normal, balanced operation.

When power is supplied, the two-input AND-gate connected to the collectors of transistors Q_1 and Q_2 provides a source of signal which turns off, or begins turn-off, in Q_4 and in Q_2. This causes the multi to start oscillating. Since during normal operation, the signals at the collectors of Q_1 and Q_2 are a complementary pair, the output of the AND gate is false and Q_5 is nonconducting.

If the multivibrator stalls, it does so with both Q_1 and Q_2 in a saturated condition, because both sides are driven with voltage-controlled current generators. In a stalled condition, the output of the AND circuit is approximately 15 v and Q_5 is conducting. It draws current from current generator Q_4 which in turn reduces current in Q_2, promoting the start of oscillations.

Martin T. Pett, Space Technology Laboratories, Canoga Park, Calif.

Bistable Switch Gates Clock Pulses to Counting Circuitry

In many digital counting and control applications it is necessary to measure the elapsed time between controlling pulses. This can be done by counting the number of recurring clock pulses in the time interval. A simple circuit which can start and stop the counting interval is shown in the figure. It uses a bistable, semiconductor switch, such as Transitron's Transwitch.

In effect, the circuit AND-gates the clock pulses to the counting circuitry. Its operation is based on the fact that once turned on, the Transwitch will remain on until pulsed off. The unit can be switched in less than 1 μsec.

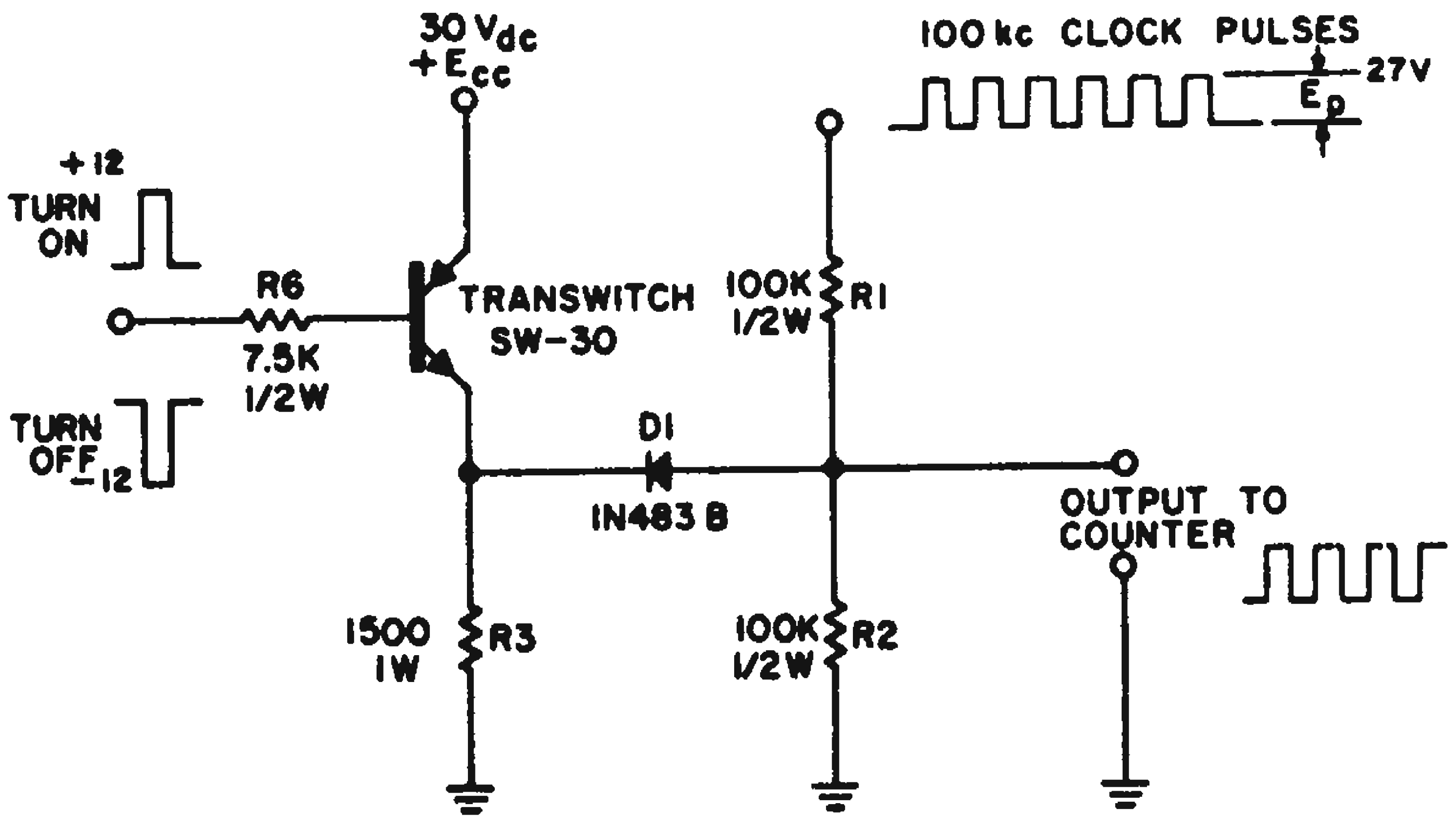

Pulses applied to base of Transwitch control counting interval by gating clock pulses to counter.

A positive pulse, applied to the base of the bistable switch, turns it on. The collector-to-emitter voltage V_{CE} drops to about 1 v, with the voltage difference V_{R3}, between E_{cc} and V_{CEon}, appearing across the emitter resistor $R3$. Since V_{R3} is greater than E_p the diode $D1$ is reverse biased, effectively opening the circuit between $R3$ and the junction of $R1$ and $R2$. The output voltage across $R2$, in this state, is the clock pulse voltage. Its maximum amplitude is $E_pR2/(R1 + R2)$, and for $R1 = R2$, $E_{out} = E_p/2$.

Thus, the clock pulses will appear at the output as long as the bistable switch is on.

If a negative pulse is applied to the base of the bistable switch, the device turns off. V_{CB} rises to E_{cc} and $VR3$ goes to zero. In this state the diode $D1$ provides a high conduction path to $R3$ and since $R2 \gg R3$, the output voltage is closely approximated by $E_{out} = E_pR3/(R3 + R1)$.

R. Goldstein, Project Engineer, Kearfott Div., General Precision, Inc., Little Falls, N.J.

One-Shot Pulse Output Has Greater Than 100% Duty Cycle

Greater than 100 per cent duty cycle pulse generators can be designed by connecting two one-shot multivibrators in series.

Such a generator was needed to produce display pulses variable from microseconds to seconds. The pulses were to be triggered by a four-decade, preset counter when the counter reached a preselected number. The maximum frequency of the display was 100 kc.

At the end of the display pulse time, the counters were to be reset, ready to be triggered again, within 10 μsec. Thus, if the preset selector is set to a low number such as 0002, and if the counter receives pulses at a 100-kc rate, coincidence is again reached 20 to 30 μsec after the counter is reset to zero.

Thus, if the output display pulse time is 1 sec, the pulse generator has to operate with a duty cycle of 99.998 per cent or better. That is, it must be retriggered within 20 μsec after the elapse of the 1-sec pulse.

A single one-shot multi was ruled out because of duty cycle limitations. However, the problem was simply solved by connecting two ordinary one-shots in series.

The first multi triggered the second, with the output of the second multi initiating the zero set of the counters. The display pulse time was the sum of the periods of the two multivibrators.

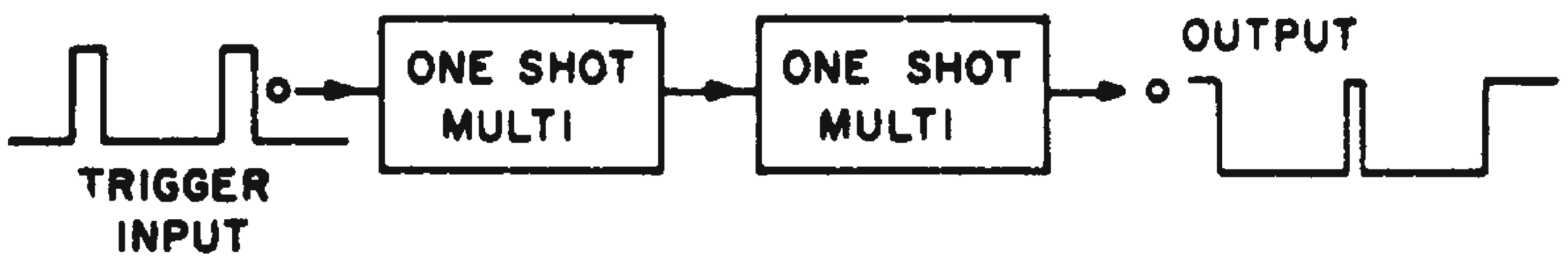

Pulse output with greater than 100 per cent duty cycle can be obtained by connecting two one-shot multivibrators in series.

By the time the period of the second multi is over, the first multi is ready to accept a trigger. The duty cycle of this combination is better than 100 per cent.

Arpad Somlyody, Circuit Design Analyst, Burroughs Corp., Electronic Components Div., Plainfield, N. J.

Fast Pulse Train Synched To Slow Input Trigger

We needed a circuit that would generate a pulse train synchronized to an external trigger pulse. The three-transistor circuit we developed, shown in the figure, was originally designed to produce a 625-kc pulse train synched to a 333-cps trigger. However, we found that with the proper combination of inductor L_1 and capacitor C_2, we could synch a 1.5-mc train to a trigger frequency as low as 100 cps.

The output pulse train is generated by a Colpitts oscillator, of which transistor Q_2 is a part. The trigger pulse, of ±10-v amplitude, is applied to capacitor C_1. The pulse is then differentiated by the capacitor to turn on transistor Q_1.

With Q_1 turned on, Q_2 is forced into saturation and the oscillations of the Colpitts are stopped. When the differentiated input pulse decays enough to allow Q_1 to cut off, Q_2 resumes oscillating.

Transistor Q_3 is part of a saturated amplifier which clips and shapes the output of Q_2.

The width and amplitude of the input trigger may be varied so that the first pulse after the trigger will be either positive or negative. The waveforms shown in the figure are of the input pulse and the output pulse train when a negative pulse was required as the first pulse after the trigger.

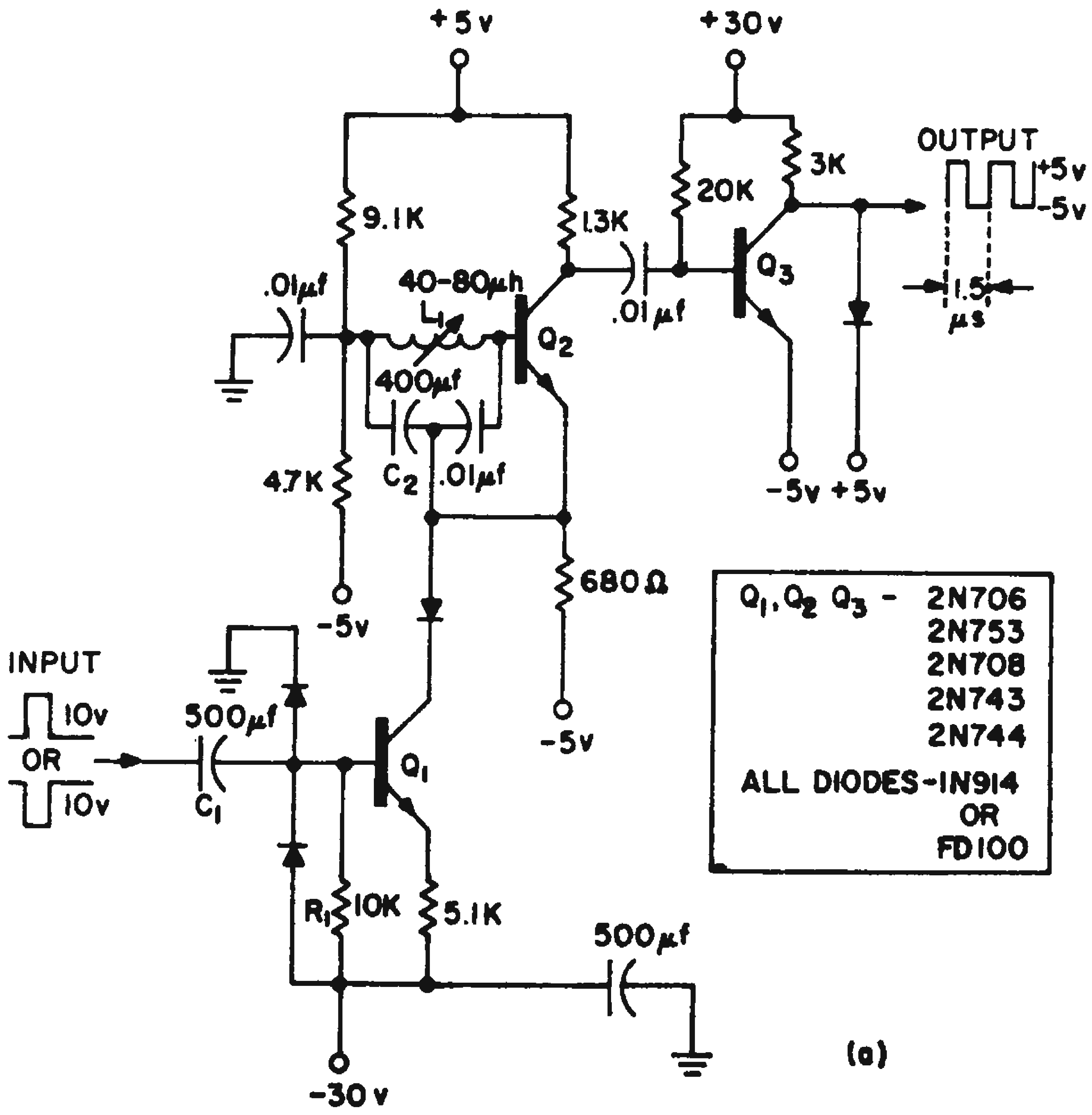

(a) Three-transistor circuit produces a 625-kc pulse train, synched to 333-cps trigger.

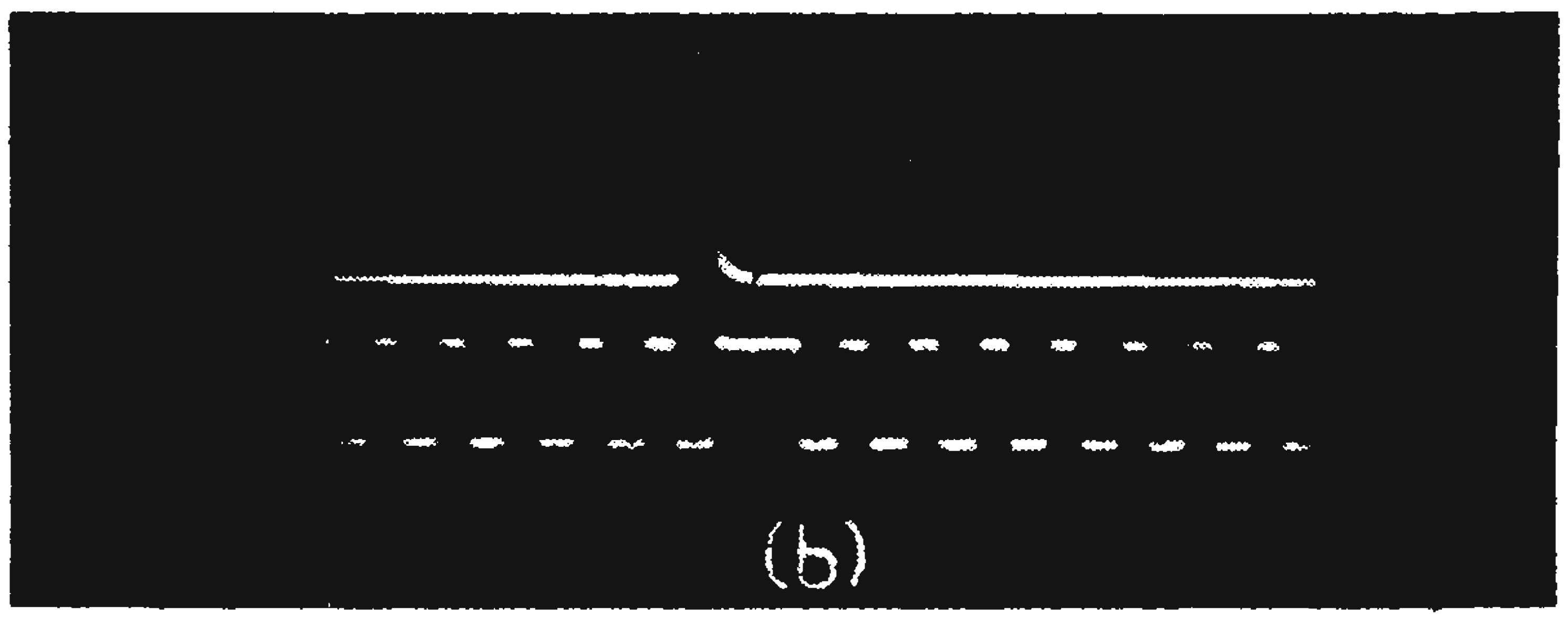

(b) Photo of input and output waveforms.

Paul M. Danzer, Electrical Engineer, Lockheed Electronics Co., Plainfield, N. J.

Steering Diodes Prevent Spurious Multi Triggering

Spurious triggering of multivibrators by stray noise pulses can be prevented by connecting a common steering-diode net as shown in the figure. With this addition the multi can only be triggered when input pulses exceed a minimum threshold level.

Referring to the circuit, if transistor Q_1 is conducting, Q_2 is off and resistor R_2 reverse-biases diode D_2, hence a positive pulse cannot pass to the base of Q_2.

However, Q_1, has a very low collector voltage and because of this, R_1 does not reverse-bias D_1. A positive-going trigger pulse of any amplitude can pass through D_1 to turn Q_1 off.

By including resistor R_3 between the steering diodes, a minimum reverse-bias is established which inhibits the passage of signals below the bias level. Thus, the signal threshold level, below which noise cannot trigger the circuit, is set.

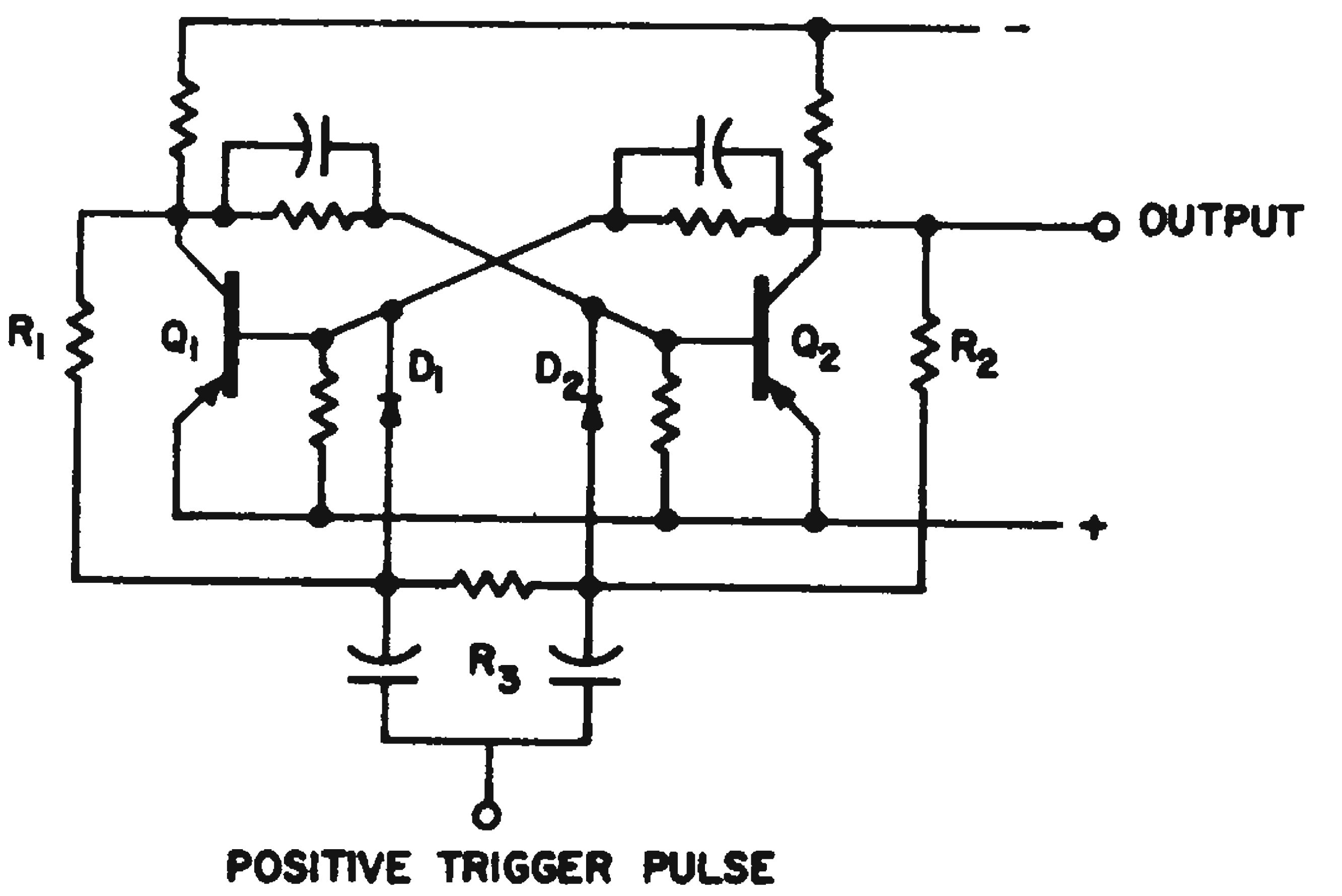

Steering-diode net and resistor R_3 establish threshhold trigger level to safeguard against spurious triggering by stray noise pulses.

J. Eugene Harrison, Manager Communications Laboratory, General Dynamics Electronics, Rochester, N. Y.

Constant Output Signal Maintained by Continuous Pulse Train

Certain logic circuits require that the presence of pulses at a given point be detected and indicated by a constant signal level. The multivibrator and delay line combination shown provides this constant (negative) level at point *1* as long as periodic input pulses are present at point *A*. If a pulse in the train is missing, the output at *1* will be triggered to zero.

The circuit is designed so that point *A* rests at ground potential. If a negative-going pulse train is present, the first pulse will both trigger the multi and start a negative pulse propagating down the delay line. The total delay time of the line is equal to the period of the train.

If an adjacent pulse is present the transistor remains forward biased and point *B* remains at ground potential. Thus, the multi will not be triggered by the propagated pulse and the level at *1* remains constant. If an adjacent pulse is missing the delayed pulse will trigger the multi and the output level at *1* will change.

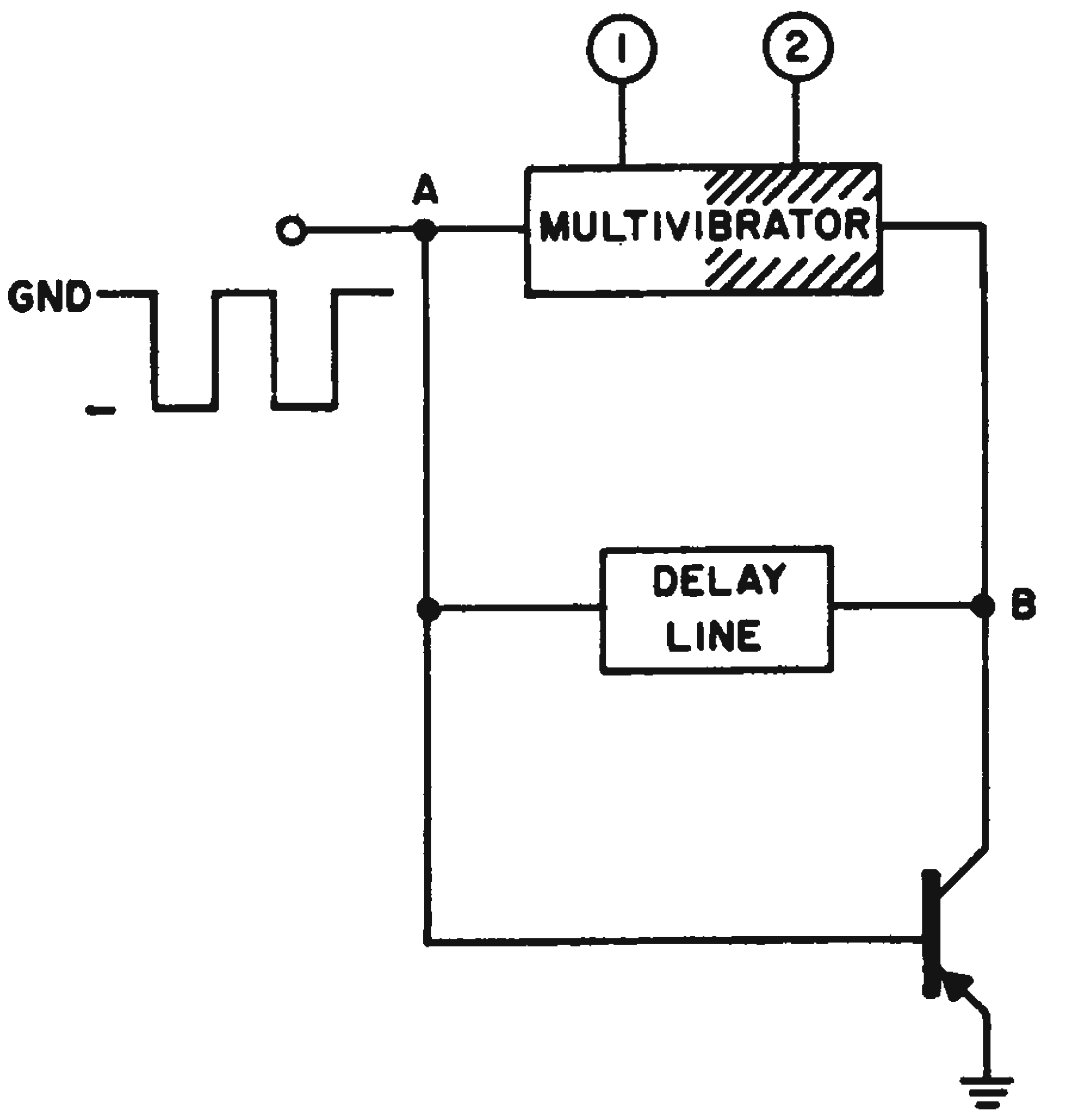

(a) Output at point *1* will be at constant level only if continuous train of input pulses is present at point *A*.

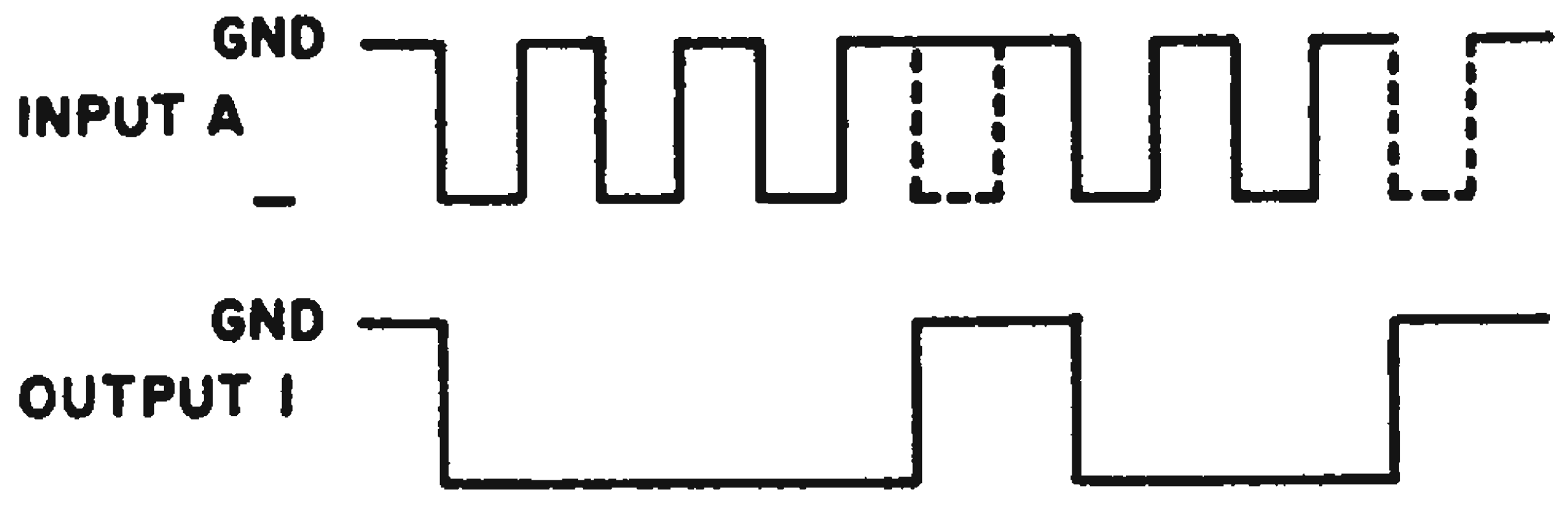

(b) Pulse train at point *A* and corresponding output at point *1* show that output "flips" when input pulse is missing.

For a negative-going-to-ground pulse train the circuit merely requires an npn transistor for the gate. Also, the multi has to be designed to trigger on a positive pulse.

Joseph F. Martin, Design Engineer, Stromberg-Carlson Div., Rochester, N.Y.

Pentode "Multi" Standardizes Long Period Square Waves

In one of our circuit designs we had to amplitude-standardize square waves having relatively long periods (1 sec to 5 mins). This was done by using a circuit, shown in the figure, which differentiated, amplified and then reconstructed the input square wave.

Since the accelerator grid of the 6BN6 is in phase with the limiter-grid voltage, regeneration can be accomplished by connecting the accelerator to the limiter via a suitable bleeder (two 1.2-meg resistors).

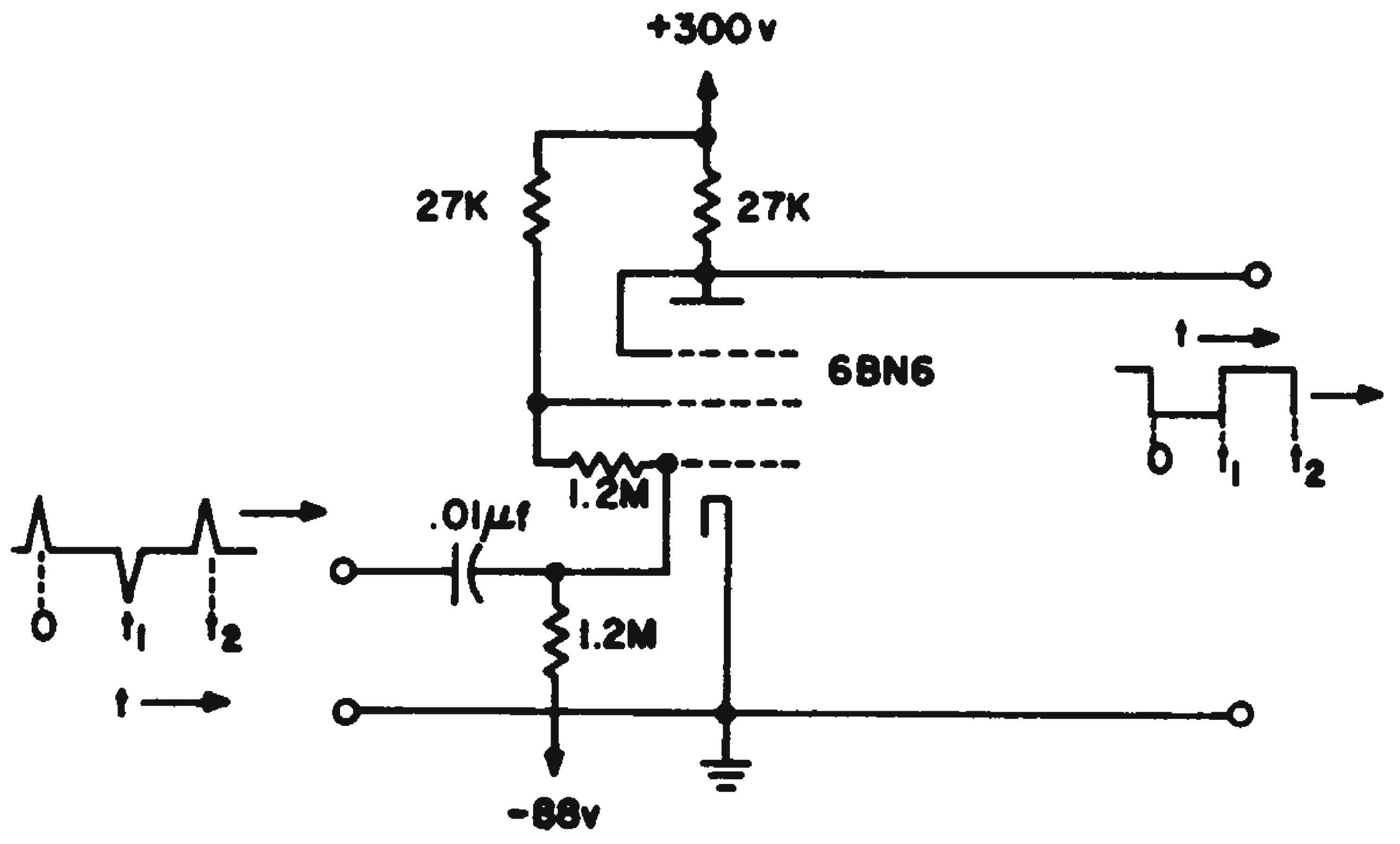

Long-period square waves are amplitude-standardized by circuit which differentiates, amplifies and reconstructs the input.

The circuit operates essentially as a bistable multivibrator. Plate current is turned on when a positive pulse is applied to the limiter grid. This state will remain until a negative pulse is applied. The plate current then returns to zero.

Alfred W. Zinn, Project Engineer, Farrand Optical Co., New York, N. Y.

Emitter-Coupled Limiter Produces HF Square Waves

A sine-to-square wave converter can be easily designed by using diode clippers. But

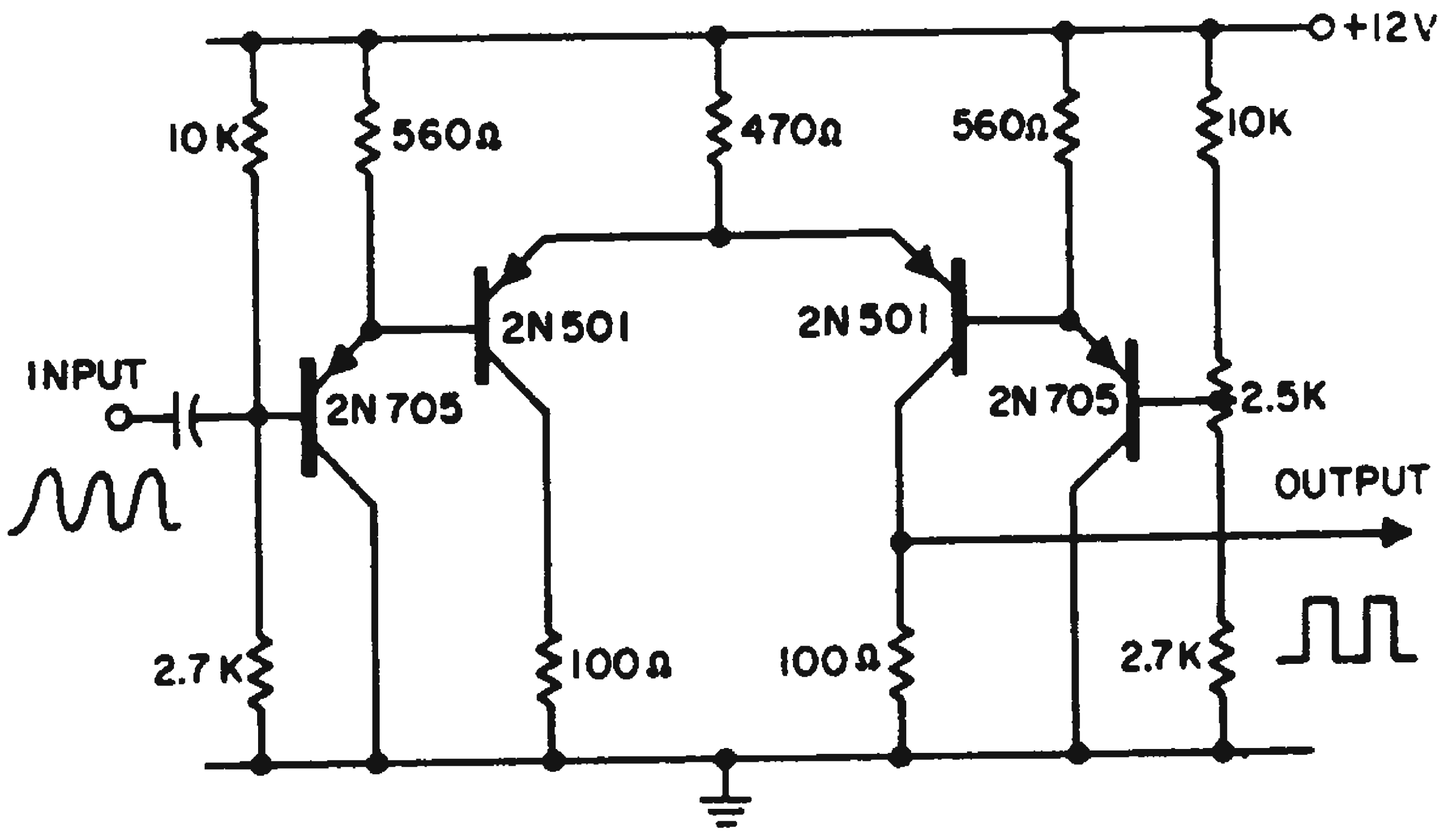

High frequency sine-to-square converter is made up of transistorized emitter-coupled lihiteds.

the rise time of the square wave then depends on the magnitude of the input sine wave. Thus, the ratio of the peak-to-peak values of the input to the output should be at least 3.

However, an emitter-coupled limiter not only needs a much smaller input voltage, but its rise-time is limited only by the switching times of the transistors. These can be reduced by driving the switching transistors out of a common collector stage.

The circuit shown produces, once the potentiometer is adjusted, a fast rise time, symmetrical square wave. A 5-mc sine wave with 2 v peak-to-peak at the input gives a 2-v peak-to-peak square wave with a rise time of approximately 20 nsec. For an input voltage of 6 v peak-to-peak, the rise time reduces to less than 10 nsec with a slight overshoot.

Harald Hahn, Assist. Electrical Engineer, Brookhaven National Laboratory, Upton, L.I., N.Y.

Modified Multi Generates Output Gate With Each Trigger

The circuit presented here shows how a monostable multi was modified to initiate an output pulse at each input trigger. An output gate is produced even if the input's repetition period is less than the natural period of the multi. Thus, an effectively continuous gate can be obtained.

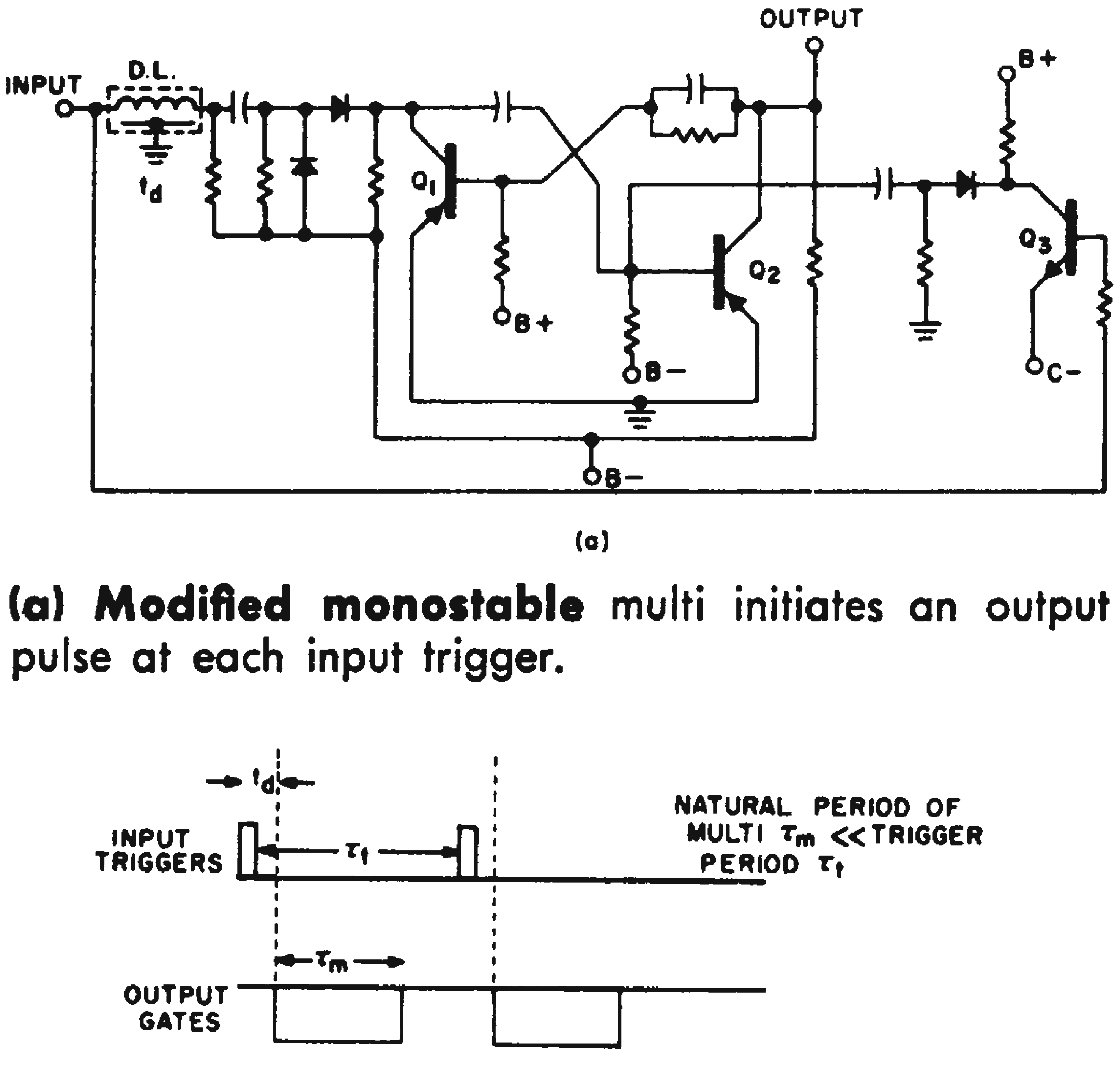

(a) Modified monostable multi initiates an output pulse at each input trigger.

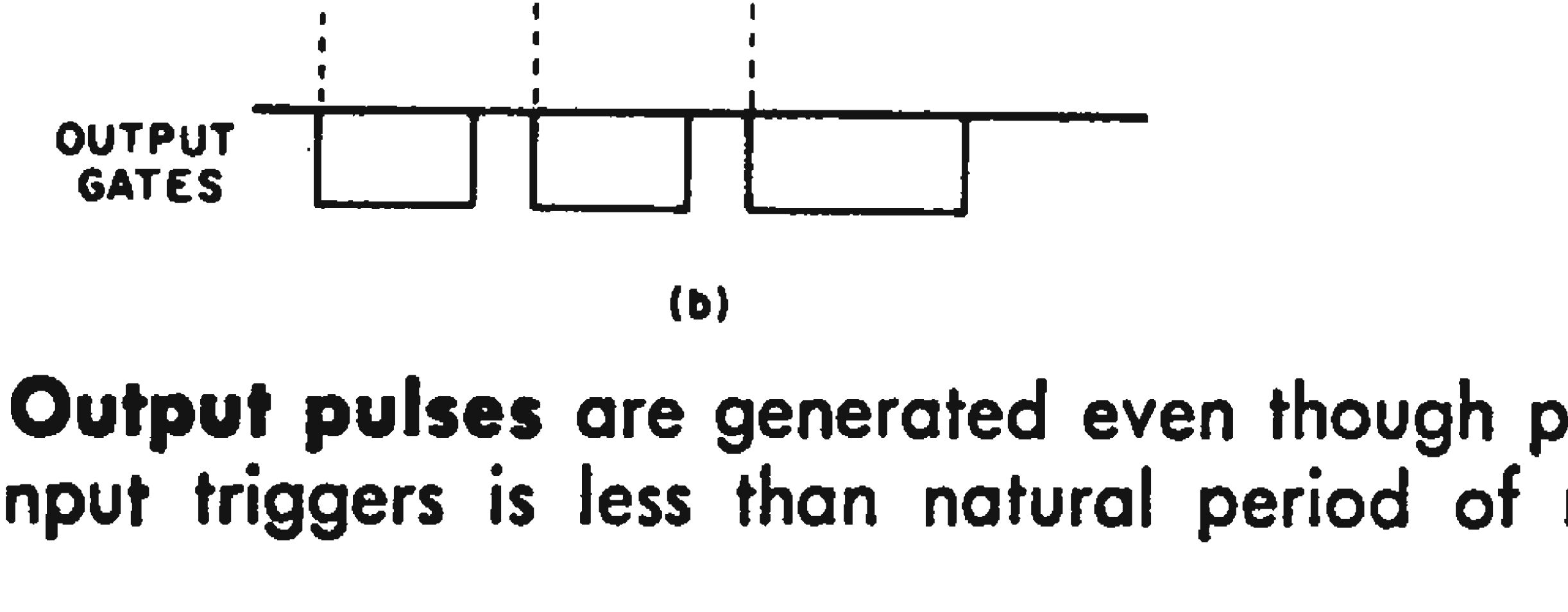

(b) Output pulses are generated even though period of input triggers is less than natural period of multi.

For triggers with greater repetition periods the unit behaves as an ordinary monostable device.

The multi is designed so that if positive input pulses are used, Q_2 is initially in saturation. Since both Q_2 and Q_3 are on, the first pulse initially has no effect on the multivibrator's state.

However, after a short interval τ_d due to the delay line, this first pulse turns Q_1 on. Transistor Q_2 is then turned off and a negative gate is generated at the output. If a second positive pulse does not appear at the input the output gate will terminate at the end of the multi's natural period.

If a second positive pulse appears before the output gate terminates, Q_3 will be immediately turned on. This produces a negative pulse at the base of Q_2, forcing it back into saturation; the multi has been caused to flip before the end of its natural period. This occurs in less time than the delay line period τ_d.

After the delay time, τ_d, the pulse arrives at Q_1. It finds the multi completely recovered and ready to generate another negative gate at its own natural period.

The virtually continuous output gate will continue as long as the period between trigger pulses is less than the natural period of the monostable multi.

Charles W. Haase, Electronic Engineer, Naval Research Laboratory, Washington, D.C.

High-Gain Pulse Amplifier Uses Complementary Transistors

High-current gain without excessive storage time can be easily obtained from a two-stage transistor pulse amplifier by using complementary transistors connected so that the second stage is prevented from saturating.

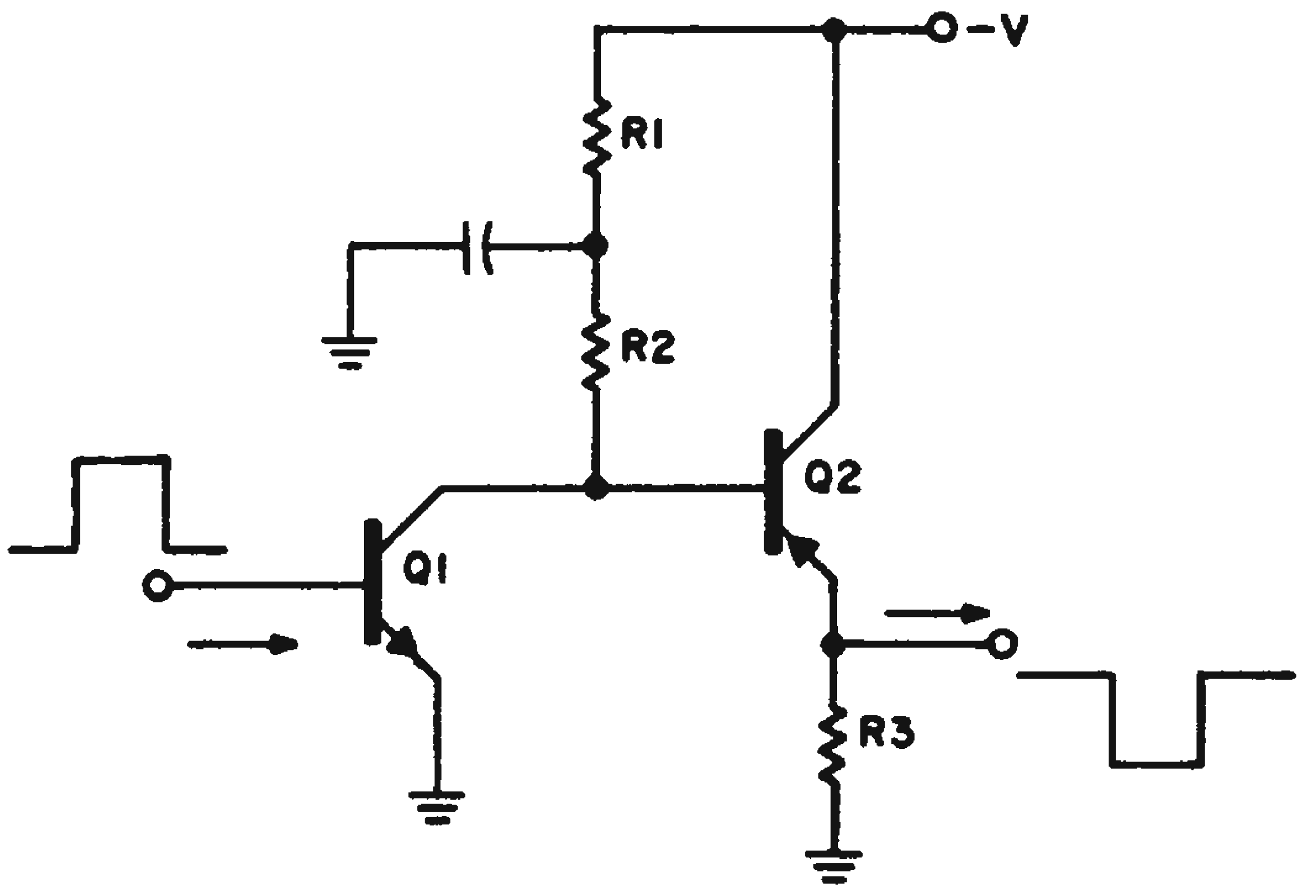

Second stage in high-gain pulse amplifier is prevented from saturating by voltage drop across R1.

By biasing Q1 (network not shown) so that the voltage drop across *R*1 is one volt, the voltage from the collector to base of Q2 can never go below this value. Q2 cannot saturate and storage time is held to a minimum.

The circuit is well suited for driving 50- to 90-ohm transmission lines with 4- to 8-v pulses. For opposite polarity pulses substitute npn transistors and a positive battery voltage.

H. F. Stearns, Engineer, Technical Products Operation, General Electric Co., Syracuse, N.Y.

Circuit Transmits Two Pulse-Trains Over Single Channel

The recording of bipolar "clock" and "data" pulses on a single channel of a strip-chart recorder required a method for keeping simultaneous pulses from cancelling. This was accomplished with a circuit, shown in the figure, which needed no delays to achieve time separation. The circuit can also be used in any application calling for the transmission of two pulse trains over a single channel.

Presence of a data pulse turns on transistor Q_1 and holds transistors Q_3 and Q_2 off, thus inhibiting passage of the clock pulse. A clock pulse alone will turn Q_3 and Q_2 on.

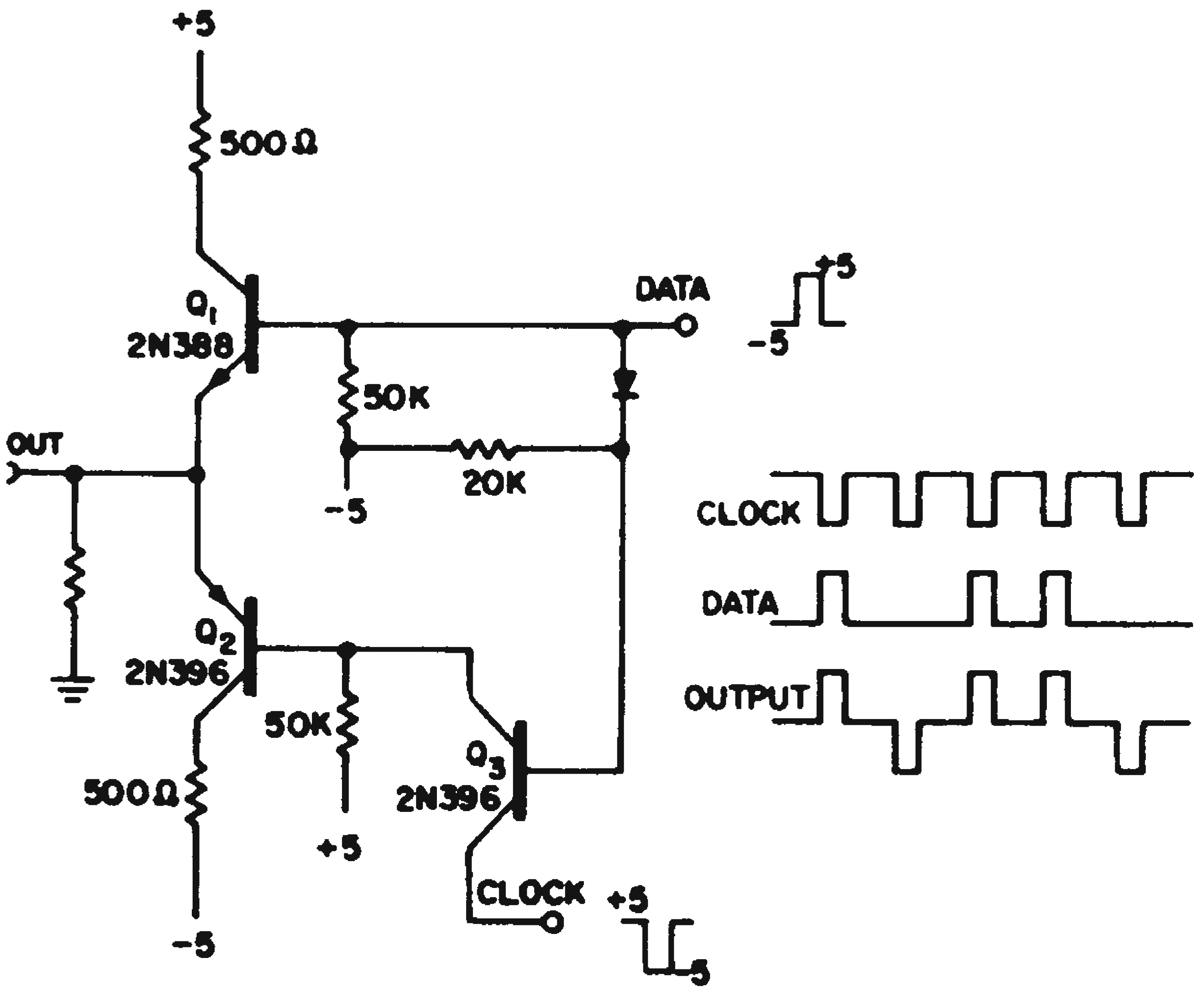

Circuit allows bipolar clock and data pulse trains to be recorded on a single channel.

In actual use the clock pulse was made wider than the data pulse so that a clock pulse would be recorded with each data pulse for easier reading. The collector resistors in Q_1 and Q_2 are for short-circuit protection and may be omitted.

David H. Brand, Supervisory Electronic Engineer, Systems Development Branch, Wright-Patterson AFB, Ohio.

Pulse-Selection System Uses Analog Techniques

In various systems that employ a pulse coder, a device is needed to generate and select a specific number of in-sequence pulses. The circuit described uses the cut-off and saturation properties of transistors, in which the base potential changes from a voltage that is higher than that of the emitter, to a lower value.

A two-gate system is shown in Fig. 1, where, if the base has a higher voltage than the emitter, the transistor is cut off, and no current flows in the collector. When the base voltage becomes lower than that of the emitter, the transistor saturates, and the collector voltage becomes almost equal to the emitter voltage.

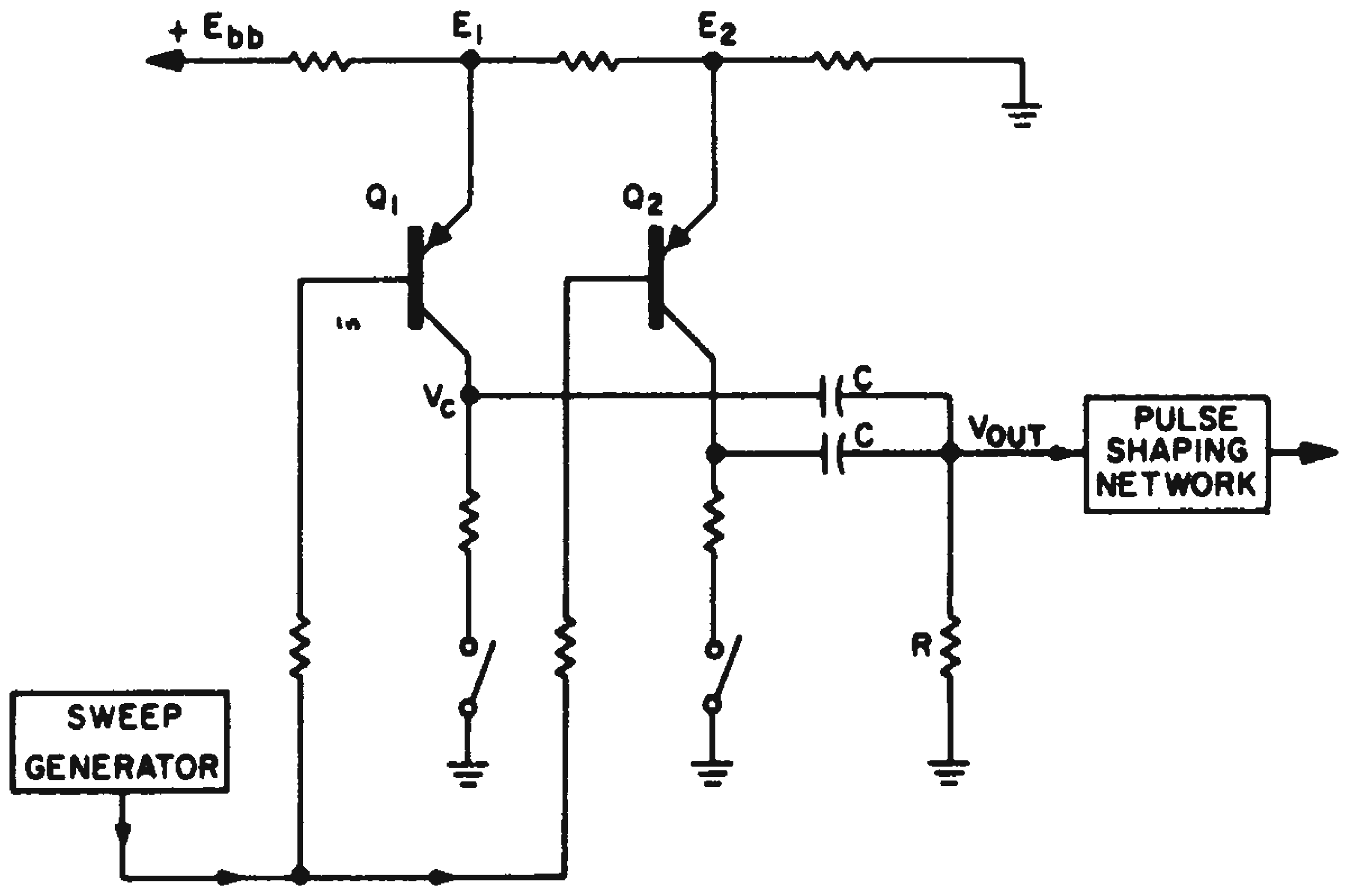

Fig. 1. Pulse selector uses cut-off and saturation properties of transistors *Q1* and *Q2*.

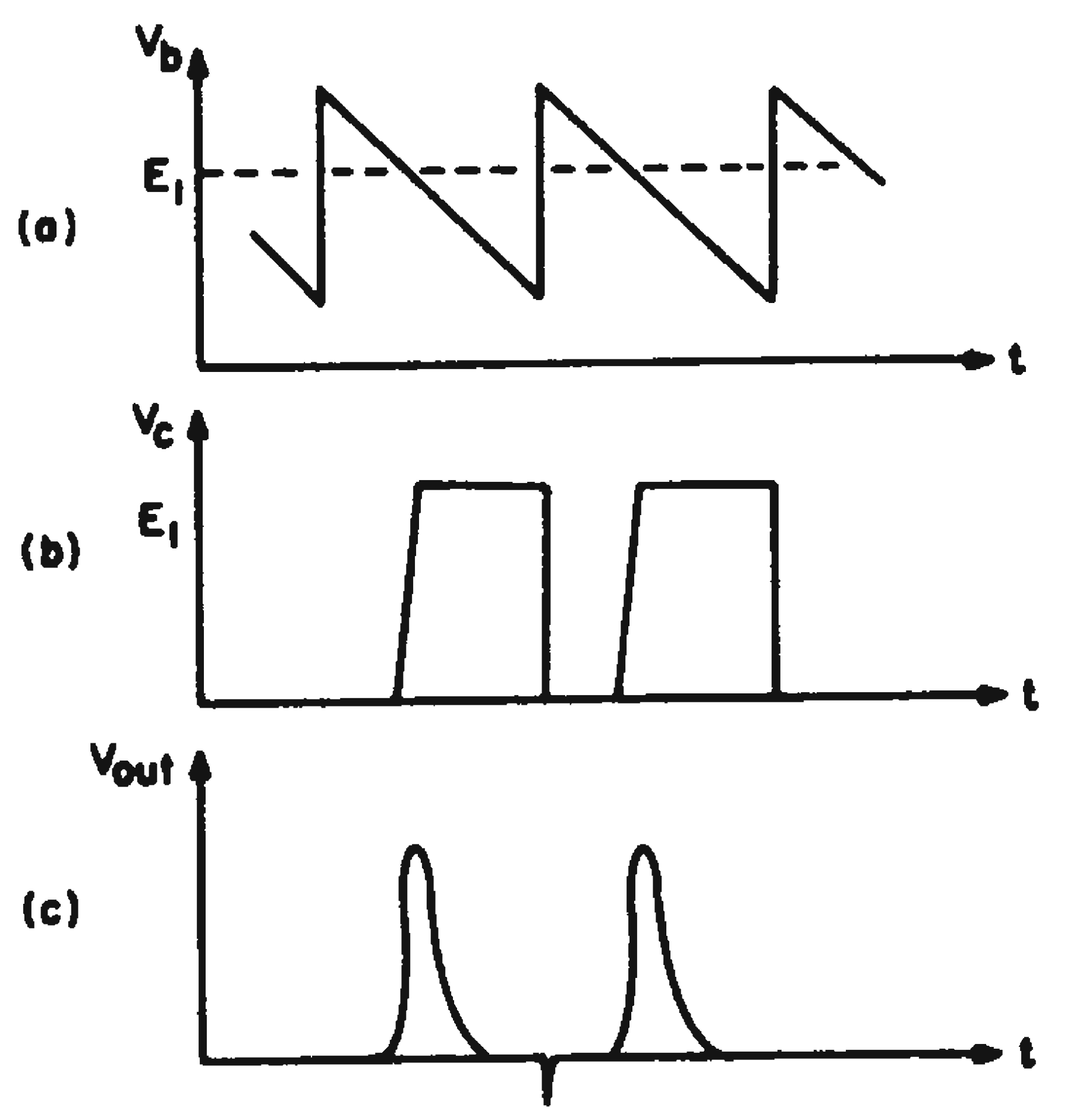

Fig. 2. Waveforms at the sweep-generator output (a); at the collector of the pulse-forming transistor *Q1* or *Q2* (b); and at the differentiated output to the pulse shapes (c).

This step function is differentiated by the *RC* circuit connected to the collectors, and a pulse is obtained. The voltage divider from the dc source to ground allows different emitter voltages to produce a timed sequence for the pulses. Switch positions facilitate "gate ON" and "gate OFF," so the pulses can be selected. If the collector resistors are large enough, and the voltage divider between the dc source and ground is a low impedance, the switching off of one transistor will not affect the others.

Fig. 1 shows only two gates, but any number of pulses can be obtained, provided they do not load the sweep generator (in which case an emitter follower should be used as a buffer). The sweep generator is a simple sawtooth oscillator providing the necessary voltage change in the bases of *Q1* and *Q2*.

Fig. 2 shows the waveforms of: (a) sweep generator; (b) collector of one of the pulse-forming transistors (*Q1* or *Q2*); (c) output caused by that particular transistor. Sweep flyback will generate a pulse in the opposite direction, but if a small flyback time is provided, it can be neglected. Besides, if a wave-shaping circuit is used, as shown in Fig. 1, it will completely eliminate this pulse.

The wave-shaping circuit must be used when the pulse specifications are very severe, as was the case in the application for which this development was made; it is a one-shot multivibrator, triggered by pulses formed in *Q1* and *Q2*.

Silvio Soares, Engineer, Avionics Products Dept., Bendix Radio Div., Baltimore, Md.

Extra Transistor Reduces Turn-Off Time in One-Shot Multi

Turn-off time of a monostable multi can be reduced considerably by adding a transistor to regeneratively discharge the timing capacitor at the end of the pulse period. The circuit, shown in the figure, has operated with rise and fall times of 0.1 to 0.2 μsec on pulse widths of 1 μsec to 15 msec.

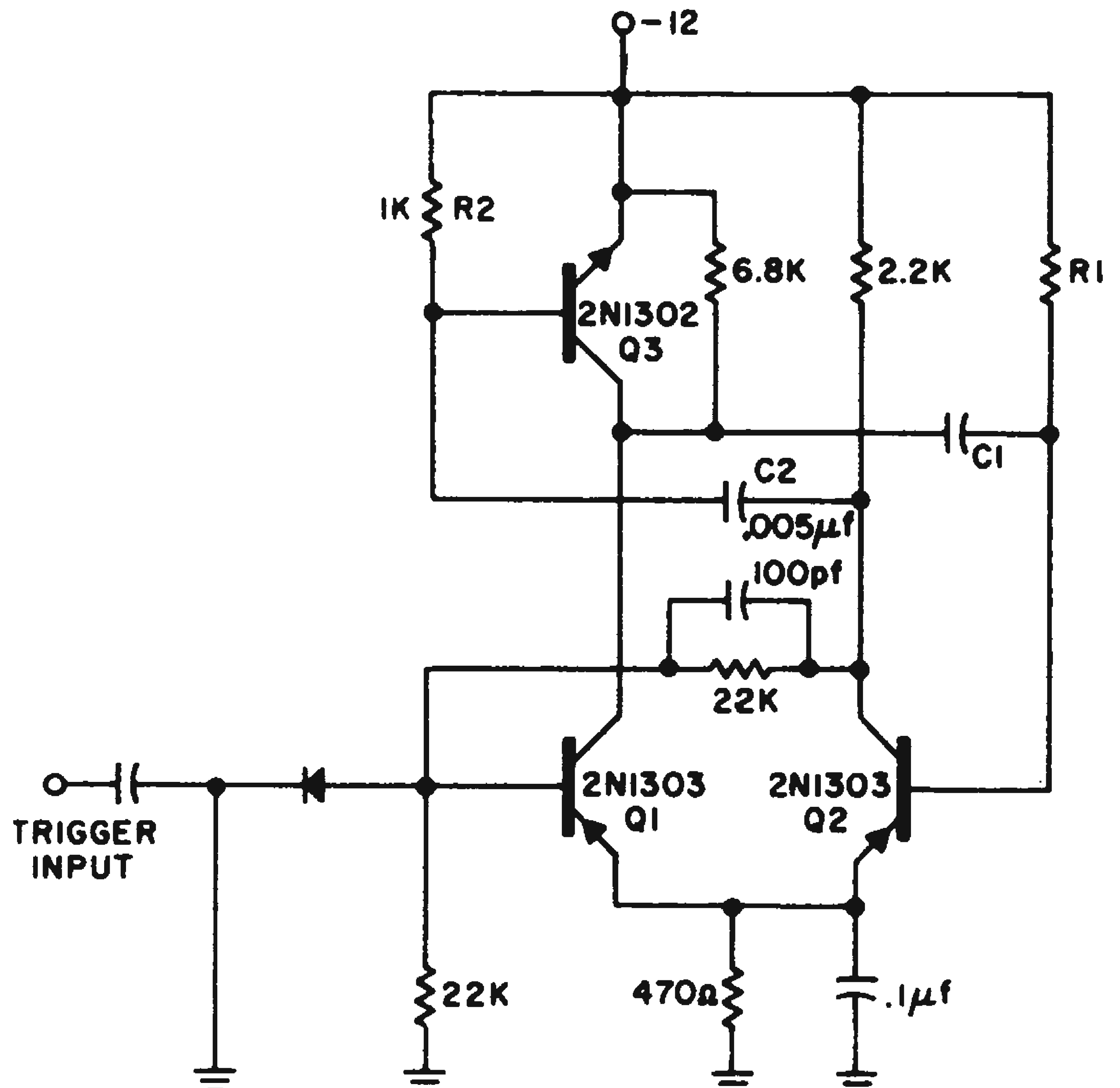

Rapid turn-off times are obtained in this monostable multi by using transistor Q_3 to help discharge timing capacitor C_1 at the end of the pulse period.

In the conventional multi, the fall time on the output collector depends on both the load resistor and the timing capacitor. If the unit is recycled before the capacitor is discharged to its quiescent condition, the pulse width will no longer remain constant. The new pulse width will depend on the amount of charge the capacitor still holds.

At the end of the pulse period, the voltage on the collector of Q_1 decreases, while the collector voltage of Q_2 increases. The R_2C_2 combination differentiates the positive-going voltage and applies it to the base of Q_3.

As Q_3 conducts, the left-hand side of C_1 is forced towards the −12-v supply—the quiescent condition.

The differentiating circuits are adjusted to completely discharge C_1, thus preparing the multi for recycling. In addition, the circuit can maintain both long output pulse periods and short turn-off times without having to increase the value of R_1.

Robert W. Allington, Engineer, Ampex Instrumentation Products Co., Redwood City, Calif.

High-Power AND Gate Uses Discharging Capacitor

Whenever a high current or high voltage AND function is required, the circuit shown in the figure can be used. A typical application would be the writing of information from a shift register into a core memory.

Initially, the signal source supplies sufficient current to charge capacitor *C* through resistor *R*. The capacitor's final charge depends upon the RC time constant and must not exceed the back bias on diode D_1.

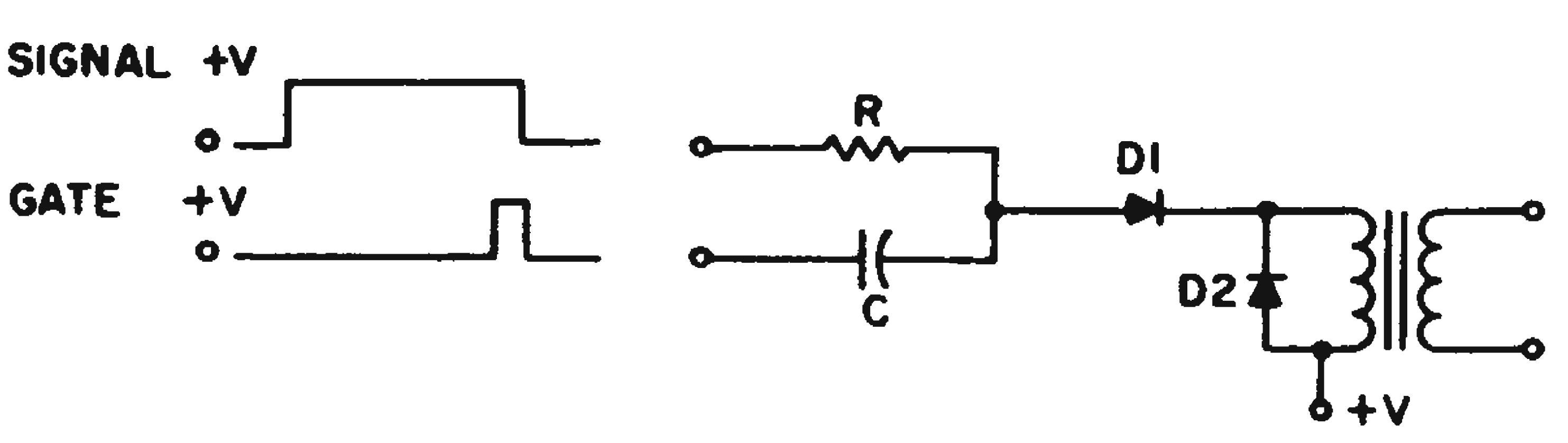

Presence of signal and gate pulses discharges capacitor to supply high-voltage or high-current output pulse.

When the gate pulse occurs, it forward biases D_1. The capacitor then discharges through the transformer. Diode D_2 is used to clamp the backswing. The transformer can be either step-up or step-down, depending on whether the application requires high current or voltage.

Charles Becklein, Engineer, Sanders Associates, Plainview, N. Y.

Simplified Gate Driver Reduces Delay Between Outputs

Six-diode gates are used extensively in electronic systems. Waveforms for driving these are opposite going square-waves. For proper operation it is desirable that there be a minimum delay between waveforms.

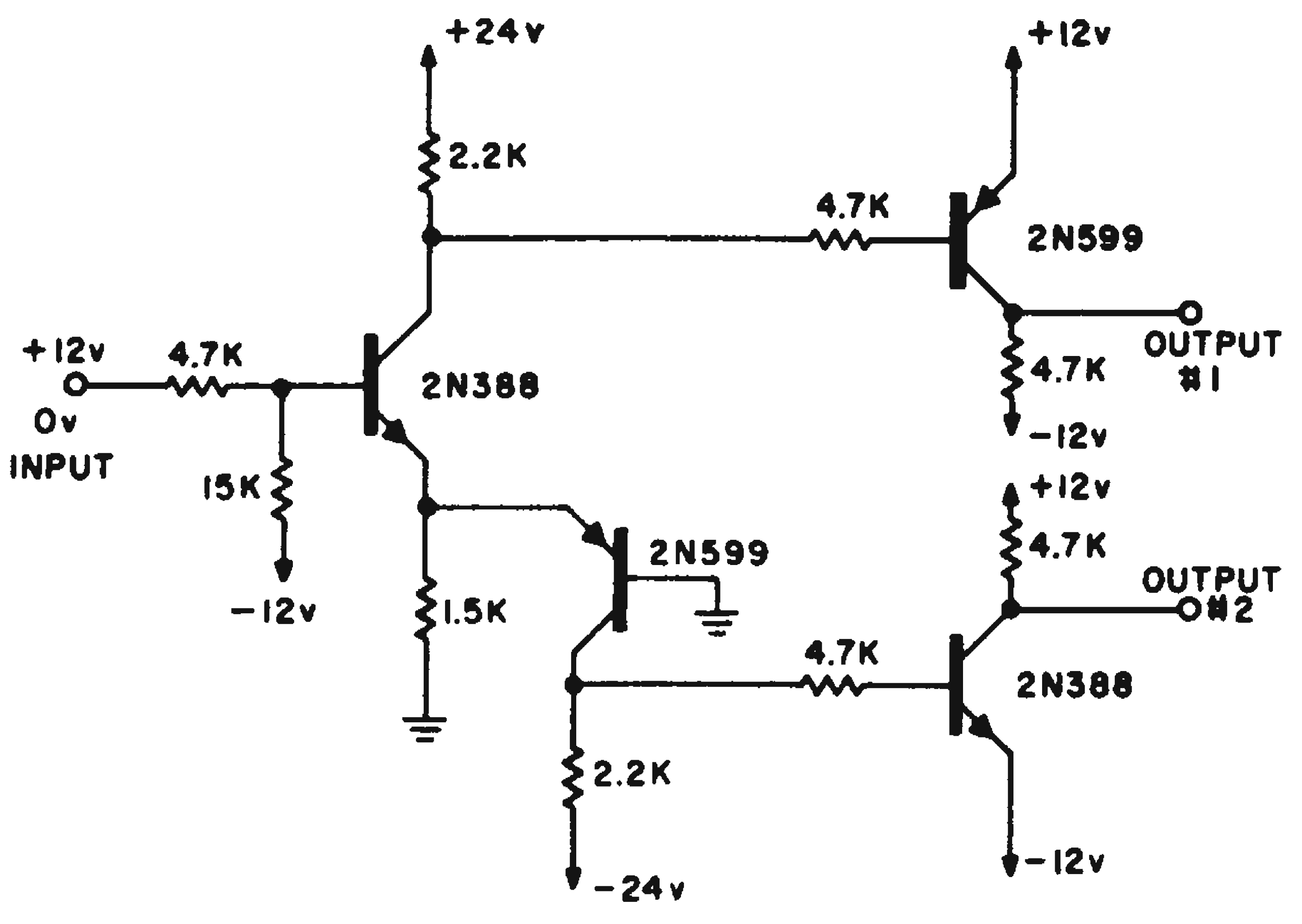

Gate driver uses one stage of common base amplification per channel.

Because one waveform is the inverse of the other, the usual method of generation is to use separate channels for each output, one containing an odd and the other an even number of inversions. This means that high speed design techniques must be used to reduce the delay between outputs.

A very satisfactory approach is to use one stage of common base amplification in one channel. Because of the high speed of the common base mode, very little delay results between outputs.

The switch driver shown in the figure has a delay between outputs of less than 0.1 μsec. This can be reduced to a lower figure by the use of diodes to prevent saturation of the transistors and by adding speed up capacitors.

Jim Curry, Engineer, Tasker Instruments Corp., Van Nuys, Calif.

RC-"Blocking Oscillator" Produces Complementary Pulses

In designing a pulse circuit for one of our systems we developed an interesting configuration which, for want of a better name, we call an RC-coupled blocking oscillator. The circuit, shown in the figure, produces two sharp, opposite-polarity pulses. Their periods can range from the low frequencies to the frequency limit of the transistors.

Transistor T_1 and T_2 are a complementary pair connected in a symmetrical circuit where $R_2 = R_4$, $R_1 = R_3$ and $C_1 = C_2$. The interval t_2 is determined primarily by the parallel combination of resistors R_5 and R_1 and capacitor C_1. Thus:

$$t_2 \cong 1/2\ R_5/\!/R_3 \cdot C_2$$

Interval t_1 is determined by the input impedance of either transistor and C_1 (or C_2). That is:

$$t_1 \cong \beta R_2 \cdot C_1 \approx \beta R_4 \cdot C_2$$

If the interval t_1 is not critical, both R_2 and R_4 can be removed. With resistance R_5 set by potentiometer, t_2 can be easily varied.

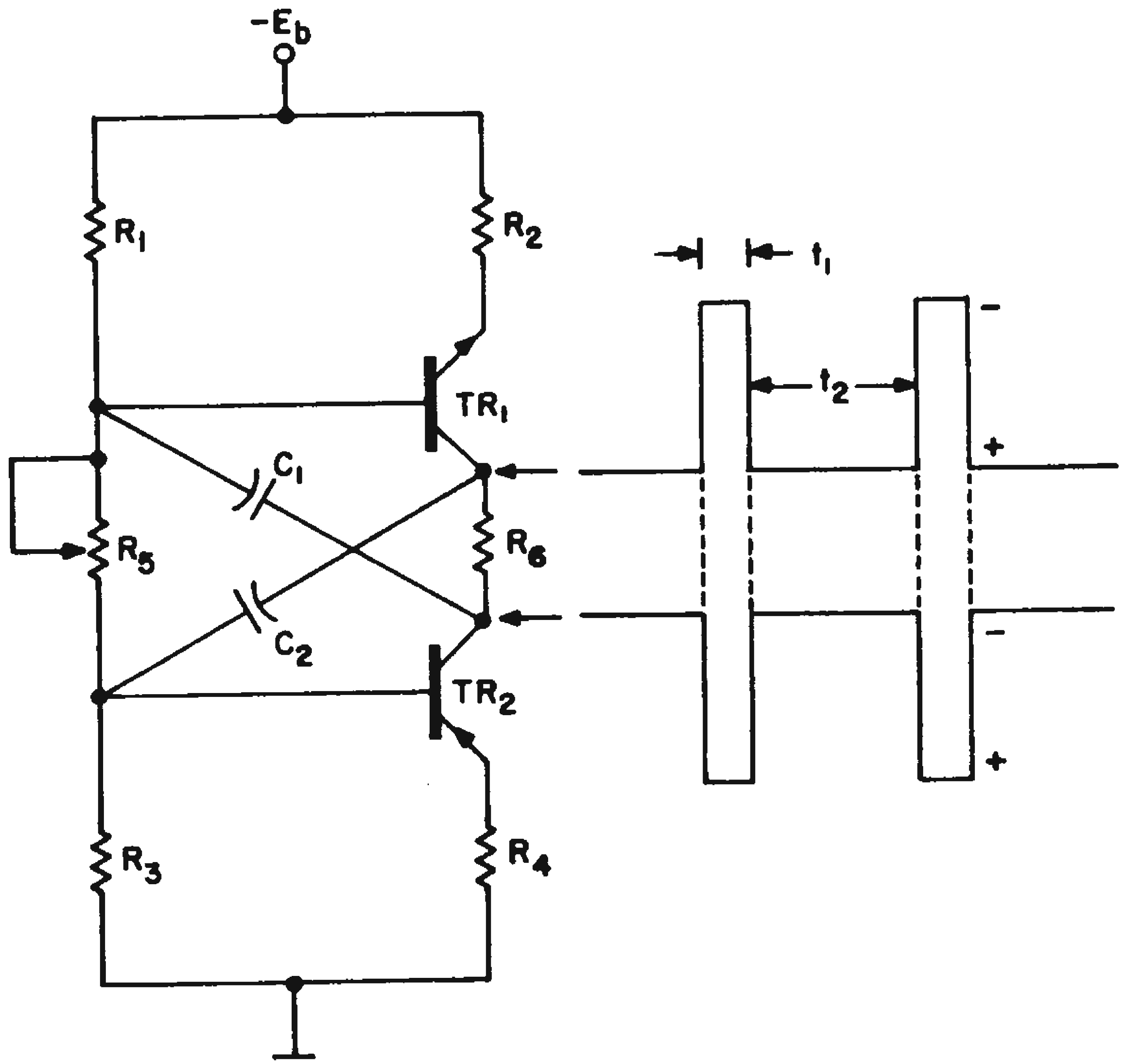

Opposite polarity pulses are produced by this variable-frequency, complementary-transistor-pair circuit.

Note that another of the reasons that we refer to the circuit as a "blocking oscillator" is that both transistors are on during t_1 and off during t_2.

J. André Bourget, Design Specialist, The Martin Co., Baltimore, Md.

Long Period Multivibrator Reduces Timing Capacitor Size

Building a transistorized monostable multivibrator for pulse widths of 10 msec or more can be a problem if space is at a premium.

The problem arises because the finite β of Q_1 (circuit *a* in the figure) places an upper limit on resistor R. This, in turn, means that C must be large, both electrically and physically, to yield the large RC product required for long pulse widths.

The maximum permissible value of R is given approximately by:

$$R = \frac{V_1 - 1.3}{V_1/R_L \cdot \frac{1}{\beta}}$$

The quantity 1.3 accounts for the drop across CR_1 and the base-to-emitter junction of Q_1 when the transistor is on. V_1R_L is the collector current of Q_1 when Q_1 is on. Not considered is the effect of the collector-to-emitter drop of Q_1 when it is on, and the bleeder current required to hold Q_2 off.

As an example, consider the typical values below:

$$V_1 = 30 \text{ v}$$
$$R_L = 3.3 \text{ K}$$
$$\beta = 40$$

Then,

$$R = \frac{30 - 1.3}{\frac{30}{3.3} \cdot \frac{1}{40}} = 126.3 \text{ K}$$

If a pulse width of 20 msec is required, the time constant is derived from:

$$t \approx 0.68\ RC$$

Choosing a standard value for R of 120 K, we have

$$C = \frac{20 \times 10^{-3}}{0.68 \times 120 \times 10^{3}} = 0.245\ \mu\text{f}$$

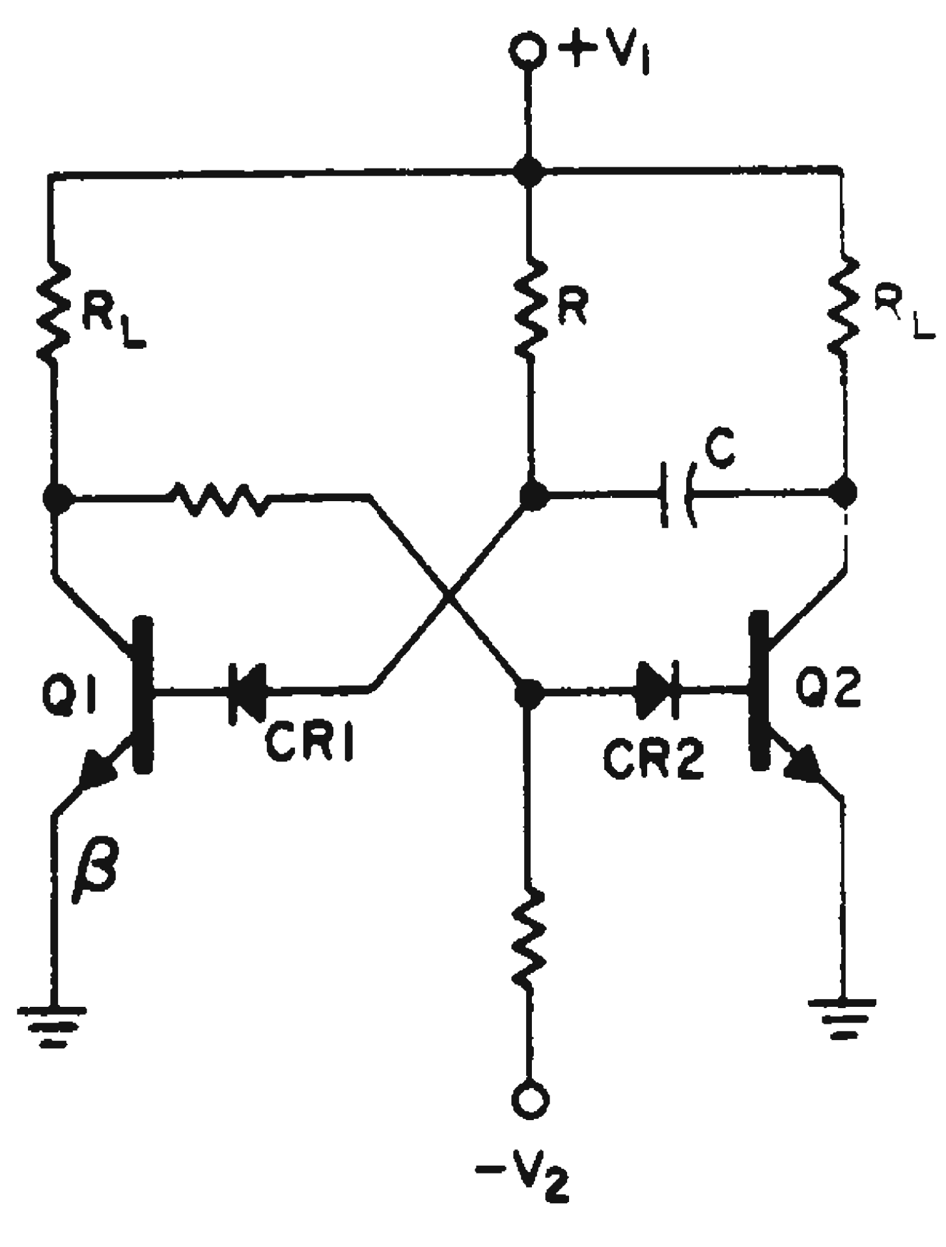

(a)

(a) Maximum value of *R* in this monostable multivibrator is limited by the value of β for transistor Q_1. Thus, for long pulse widths, capacitor C must be large.

Compared to the other components in the circuit, this capacitor is physically very large. This is especially true if the capacitor must be both accurate and stable.

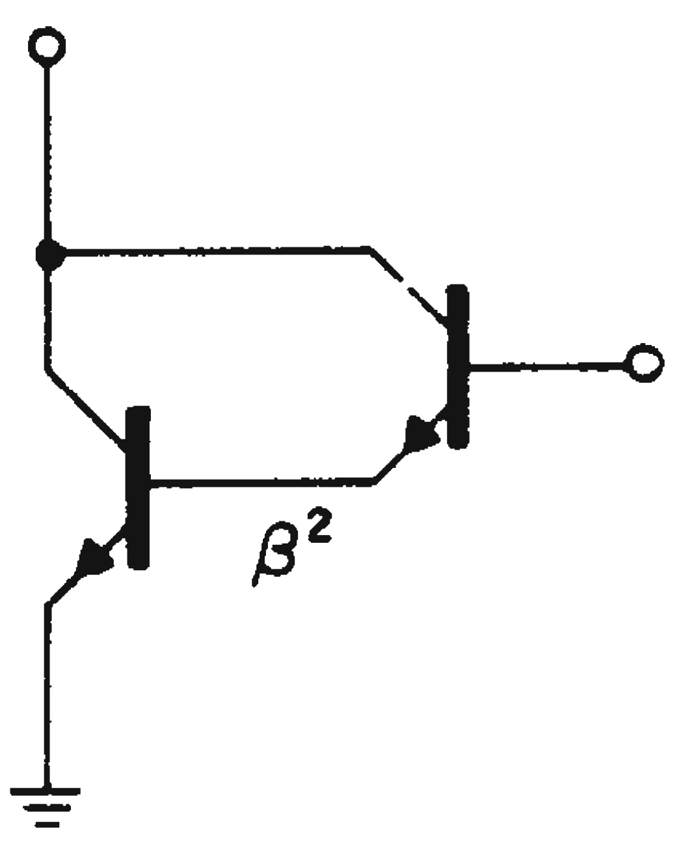

(b)

(b) Replacing Q_1 with two-transistor Darlington connection effectively squares the value of β. This allows a larger *R*, and reduces both the value and size of C.

However, the size of the capacitor can be considerably reduced if transistor Q_1 is replaced by the two-transistor Darlington connection. The over-all β is now 40 x 40 = 1,600, and R can be 40 times larger than before. Hence, C can be 40 times smaller. Using a practical value of R = 1 meg, we have

$$C = \frac{20 \times 10^{-3}}{0.68 \times 1 \times 10^{6}} = 0.0294\ \mu\text{f}$$

Obviously, a much smaller capacitor will be required.

W. E. Zrubek, Design Engineer, Westinghouse Electric Corp., Baltimore, Md.

Gated Square Waves Vary Pulse Width of Output Train

In some electronic systems, such as a pulse transmission, multiple-echo reception system, a linearly increasing pulse width is required for a given number of cycles.

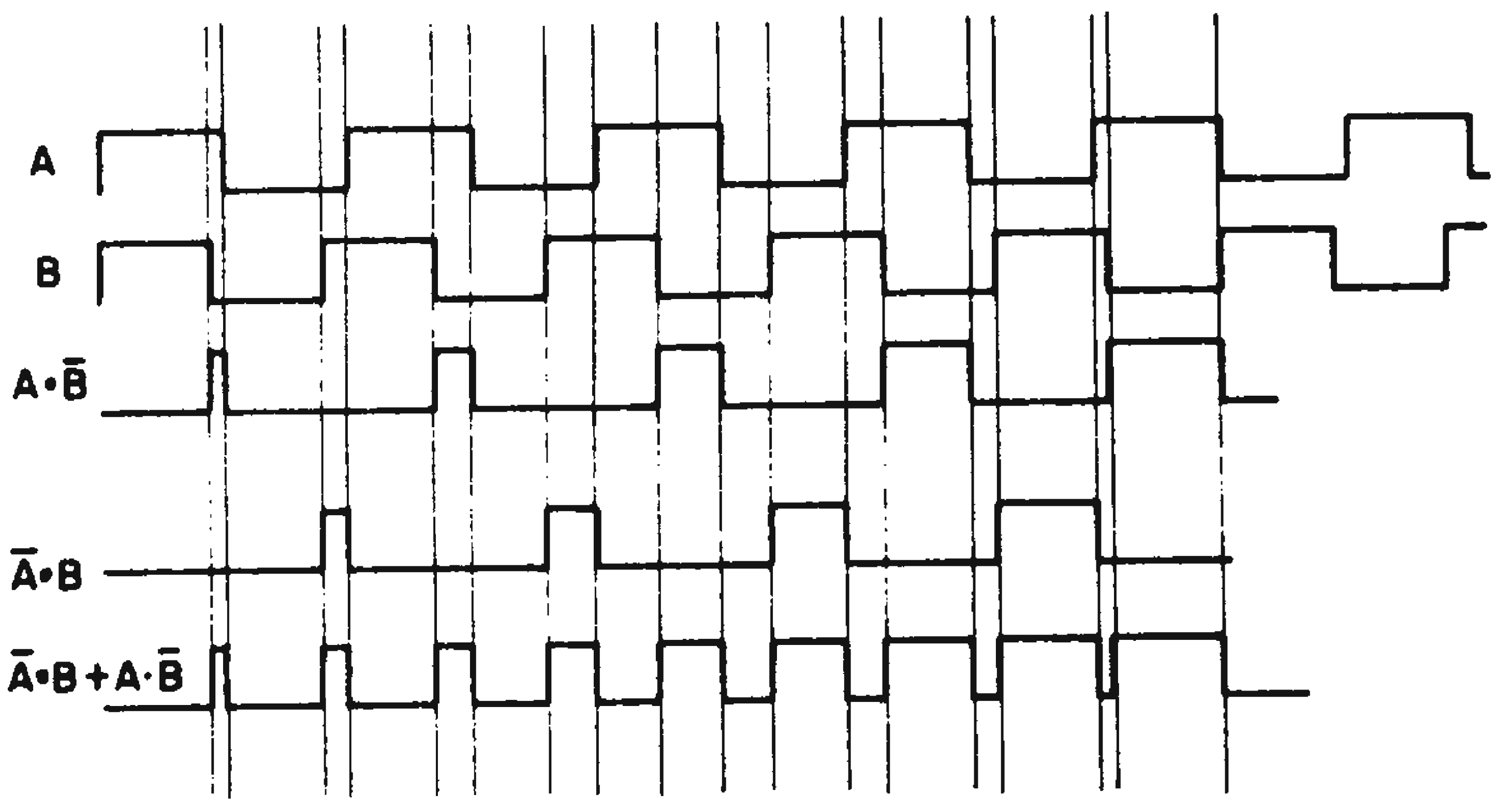

Square waves *A* and *B*, gated as shown, produce an output pulse train whose width varies linearly with time.

A simple method for generating such a pulse train is shown in the figure.

Two square waves are gated whose difference in periods is equal to twice the desired incremental change in pulse width per cycle. The pulse width increases linearly per cycle and then decreases as the phase of the two frequencies shifts.

Leonard L. Kleinberg, Electronic Engineer, Lockheed Electronics Co., Metuchen, N.J.

Complementary-Pair Multi Has Long Pulses, Small Capacitor

Built around a pair of complementary transistors, a one-shot multivibrator was designed which:

- a) required no power until triggered
- b) handled large load currents
- c) sustained long pulse periods with a relatively small-sized capacitor.

The circuit's transistor pair is regeneratively coupled by resistor R and capacitor C. Since the output current is $\beta_1\beta_2$-times the base current required to saturate Q_1, timing capacitor C can be approximately β_1-times smaller than would be possible in a conventional multivibrator.

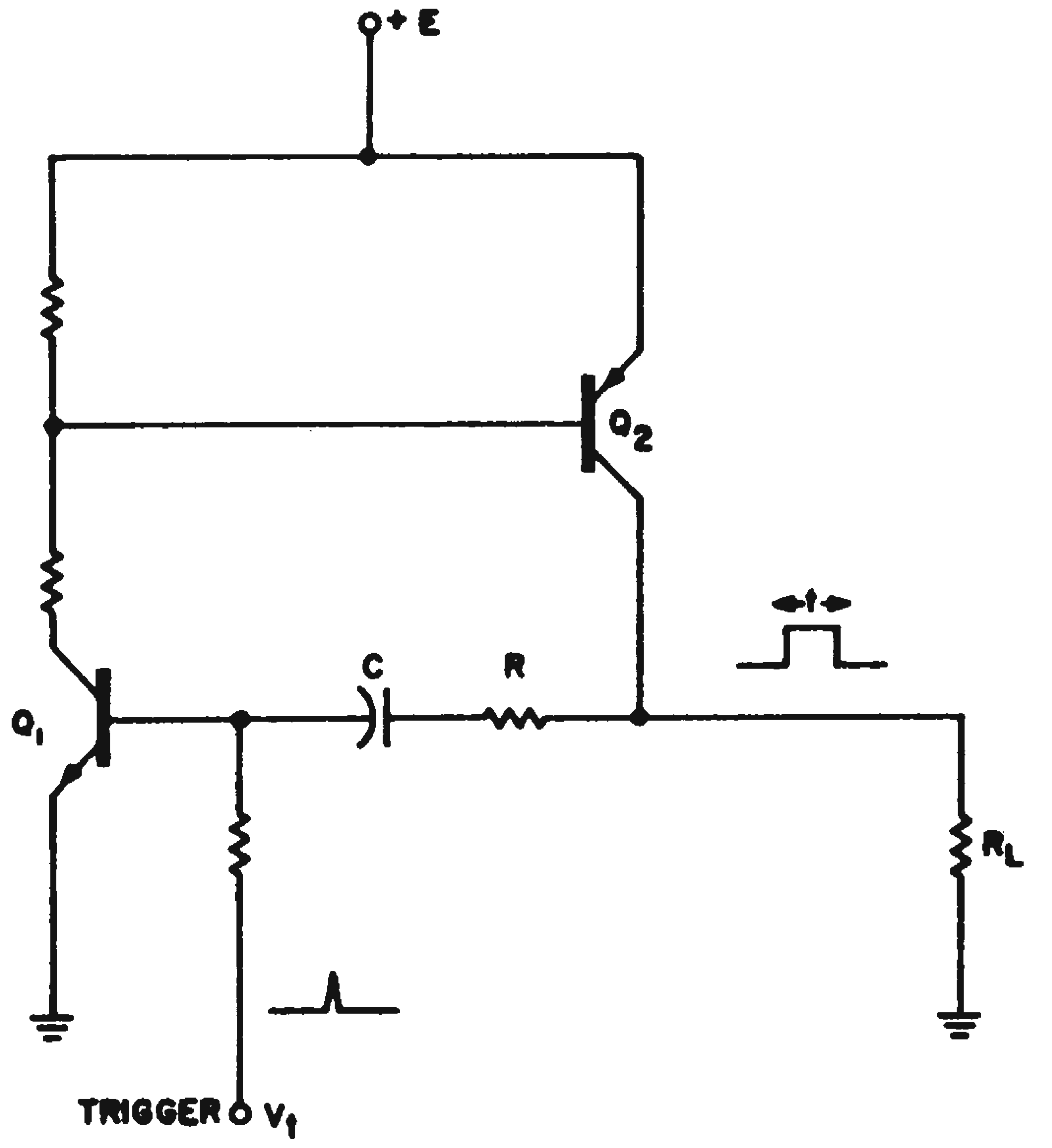

Complementary transistors are used in this one-shot multivibrator. Effective value of *R* is increased to allow a relatively smaller value of C to be used.

More precisely, if the "ON" period is chosen to be $t = R_{eff}C$, R_{eff} can be calculated to be: $R_{eff} \cong R\,\beta_1\beta_2\,(1\text{-}0.63)$. And, of course, $C = t/R_{eff}$.

Kermit Norris, Technician, Jordan Electronics, Alhambra, Calif.

Square Wave Generator Has 3.3-10 Mc Range

A relatively simple variable frequency square wave generator, using a Hartley oscillator and Schmitt trigger combination, was designed for a frequency range of 3.3 to 10 mc.

The oscillating frequency is set by a variable capacitor in the tank circuit of the Hartley. The sine wave then feeds into the Schmitt trigger circuit.

Emitter followers are used to match impedance between stages. The output signal has a peak-to-peak amplitude of 10 v.

Nicholas Marchese, Assistant Electrical Engineer, Lockheed Electronics, Metuchen, N.J.

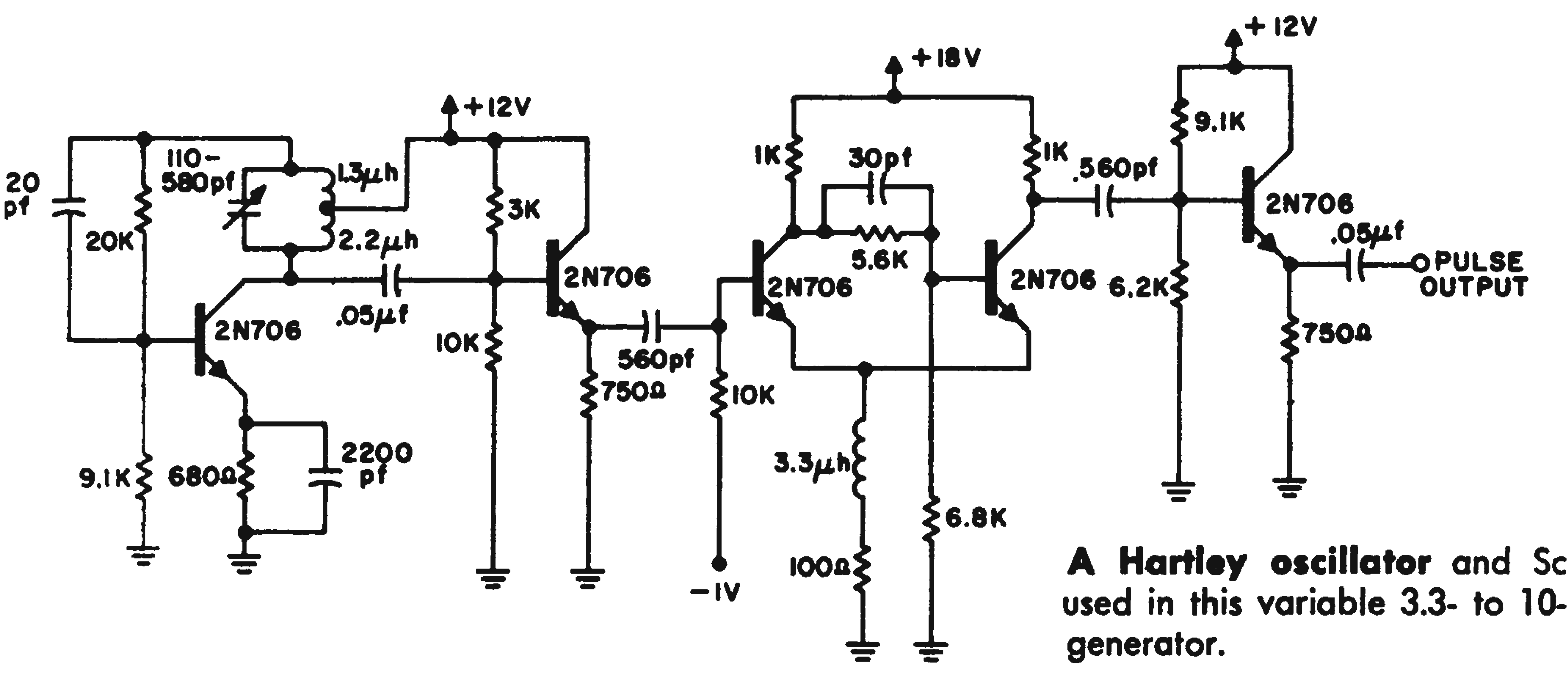

A Hartley oscillator and Schmitt trigger are used in this variable 3.3- to 10-mc, square wave generator.

Clock Pulses Generated By Magnetic Core Timer

Clock pulses at frequencies as high as one megacycle can be generated with the magnetic core circuit shown in the figure. Two pulses are obtained from each core and the circuit can be designed for a variety of pulse shapes and time bases.

The circuit is "started" by a momentary closing of the START switch. Transistor T_1 then drives core C_1 into positive saturation. This flux change is sensed by the winding in series with the base of T_2. Transistor T_2 now conducts and drives C_1 back into negative saturation.

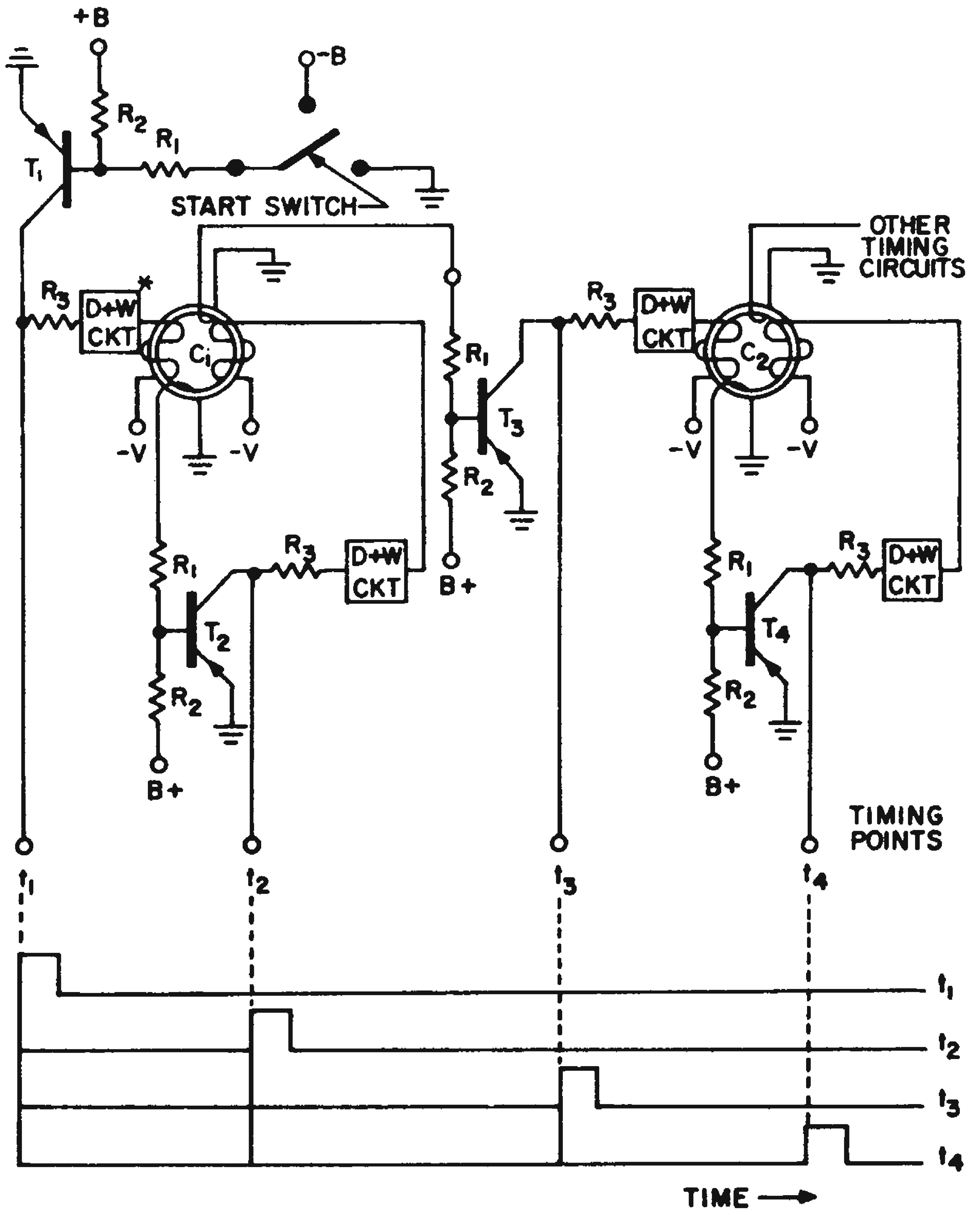

*D+W = DELAY AND WAVEFORM

Magnetic-core clock pulse generator provides two pulses per core. Stages can be added as desired.

This second flux change is sensed by the winding in series with the base of T_3 and the progression continues. The result is that as each transistor conducts, it supplies a voltage pulse at its timing point.

Waveform shape and frequency may be varied through the design of the delay and wave shape (*D* and *W*) circuits, and through selecting the cores to be used.

Philip I. Hershberg, Project Engineer, Air Force Cambridge Research Laboratories, Waltham, Mass.

Sequential Counter Stepper Uses Error-Correcting Code

Here is a rather unconventional circuit we designed for a sequential scanning application that produces successive high-power pulses on 16 output leads. At the same time, these pulses are counted in a redundant binary code.

As shown in the figure by mirror symbols, the circuit has a seven-bit "address register" using two cores per bit. An output from each core feeds through a diode into a core matrix having 16 cores. Fourteen "selector wires" pass through each core in a different polarity combination, according to a modified Reed-Muller code.

When the clock pulse resets the address register, seven of the 14 selector wires carry currents. In only one core will these currents combine to exceed the threshold and set the core.

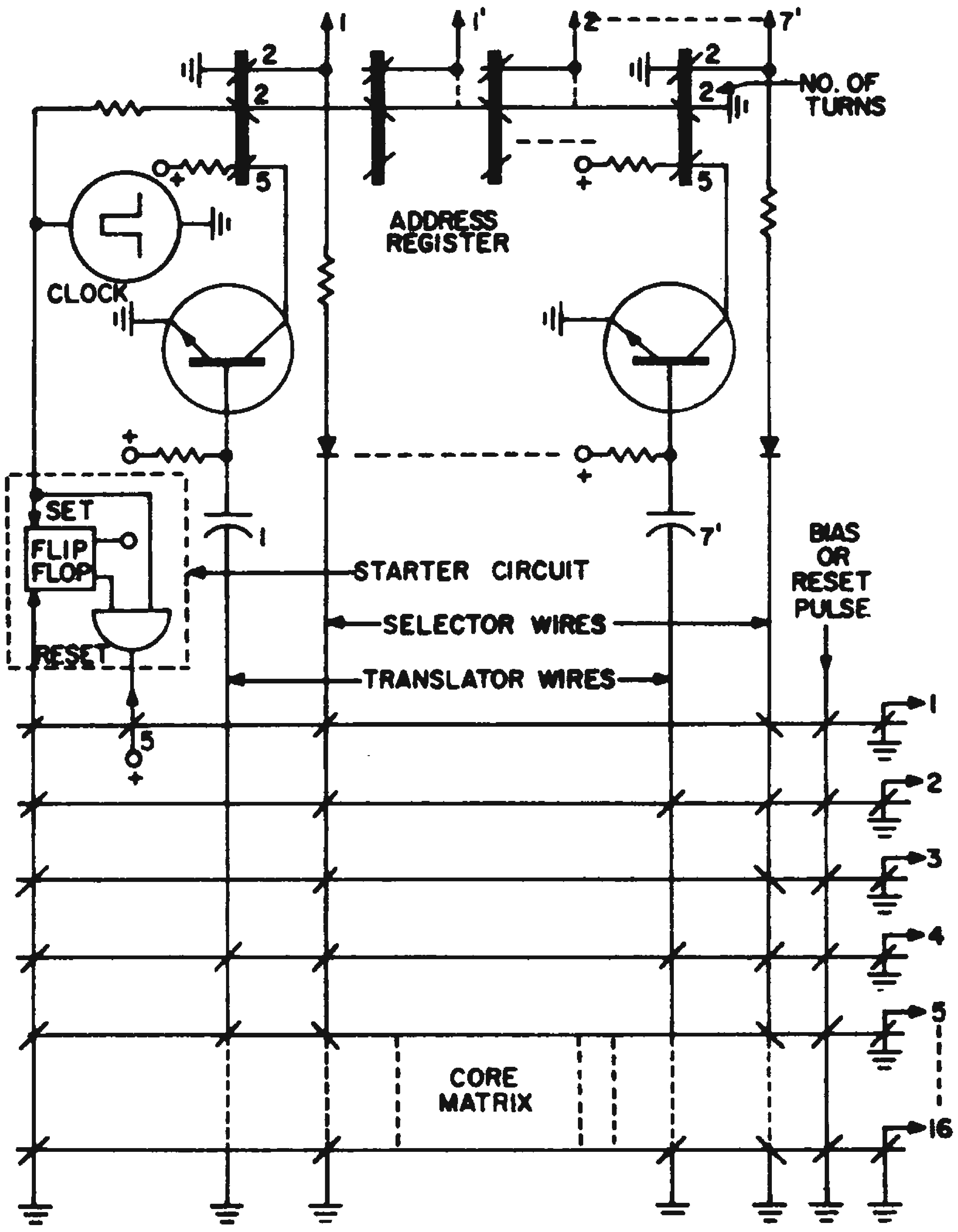

Successive pulses can be obtained on the 16 output lines of this ferrite-cored scanning circuit.

The selected core is subsequently reset, either by a bias current or by a reset clock pulse. As a result, voltages are induced in seven of 14 translator wires; each core is threaded by seven wires and bypassed by the remaining seven.

The very first cycle is started by a three-transistor "starter circuit" which detects lack of response to the first clock pulse and routes the next one to core No. 1 of the matrix, thus forcing its selection.

The counter-stepper tolerates at least one component failure, and often several, with little degradation. Certain short circuit failures may cause marginal operation. The transistors must be capable of passing pulses of 200 to 300 ma, but their parameters are quite uncritical. Output currents of up to 3 amp have been obtained with 2-amp turn clock drives, while more typical operation calls for 1-amp turn drive. Typical advance time is 4 μsec, using cores made of low-coercive force ferrite, having 1/4 in. OD, 1/8 in. ID and height.

Ernest R. Kretzmer, Member of Technical Staff, Bell Telephone Laboratories, Murray Hill, N. J.

Hybrid Three-Level Logic Requires Fewer Components

In general, when standard digital modules are used, an active element will follow every two levels of logic.

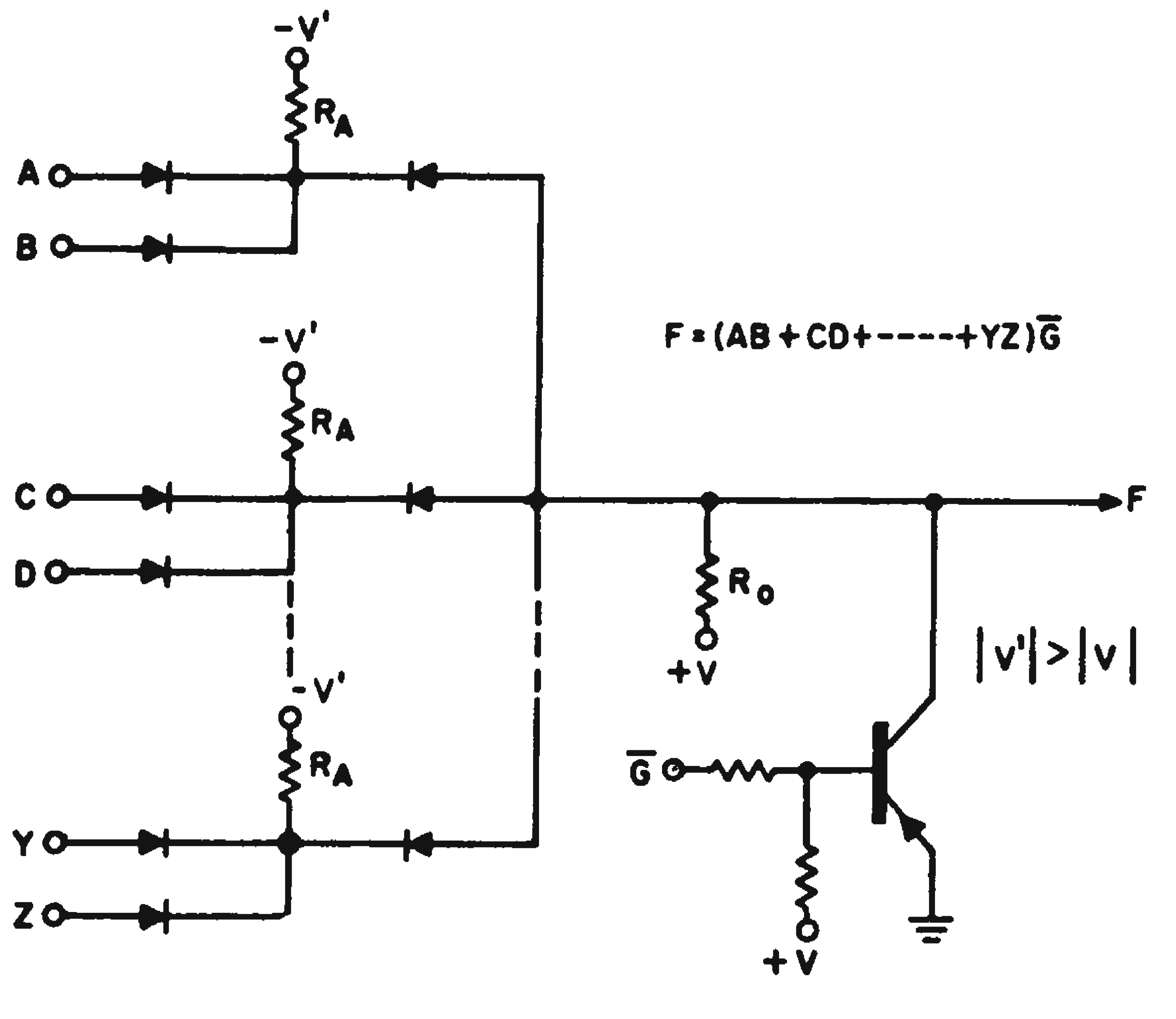

Transistor stage helps to simplify three-level logic circuitry.

However, the number of components necessary to produce three-level logic, where one function modifies many, can be minimized with the circuit shown in the figure. This circuit performs the function:

$$F = (AB + CD + \dots . \, YZ)\overline{G}$$

Negative logic is assumed, that is, —*V* is a logical "1" and ground is a logical "zero."

Herb Seidman, Systems Engineer, Daystrom Control Systems, La Jolla, Calif.

RC Pair Safely Sets Initial State of Relay Driver

Driving a relay by using the relay coil as a collector load of a flip-flop, as shown in Fig. 1, is not uncommon. However, when power is first applied to this circuit the relay will energize. This occurs because the coil inductance initially witholds current from the base Q_2. Thus Q_1 conducts first, energizing the relay.

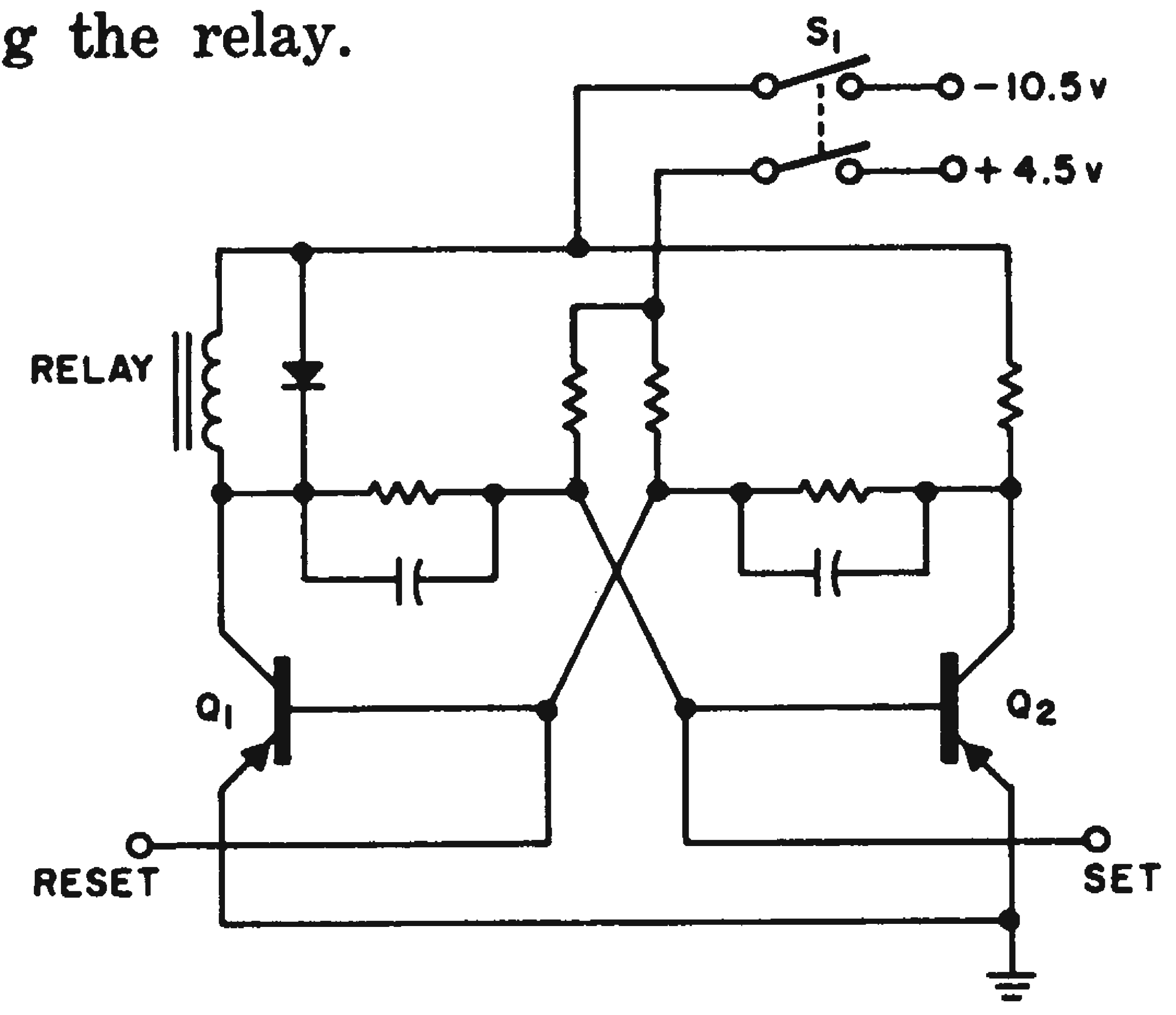

Fig. 1. Standard flip-flop with relay coil as collector load. Relay will energize when S_1 is closed.

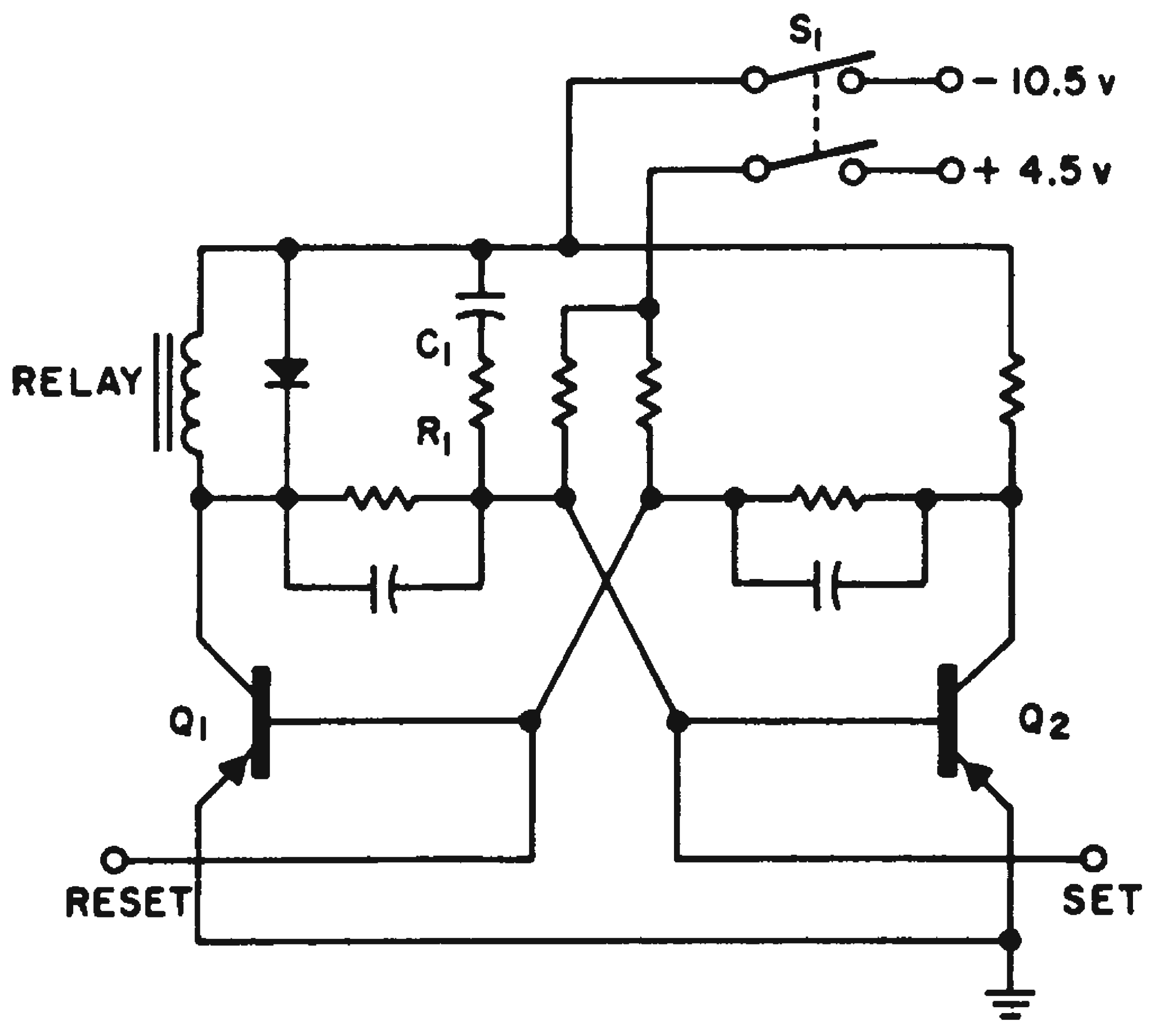

Fig. 2. Relay will not energize, in this modified flip-flop, when power is first applied.

It was necessary, in a particular application, that the relay not energize when power was first applied. This problem was solved by adding R_1C_1 as shown in Fig. 2.

When power is first applied to this circuit, a negative pulse is coupled by R_1C_1 to the base of Q_2 forcing it to conduct. This sets the flip-flop to the required initial state. After the power has been applied, the RC combination has no further effect on the operation of the circuit.

Using a −10.5 v supply, as shown, values of $R_1 = 5.1$ K, and $C_1 = 0.68$ μf gave reliable performance.

Richard J. Bouchard, Electronics Engineer, Sanders Associates, Nashua, N. H.

Delayed-Pulse Generator Uses Fewer Components

It often is necessary to produce a pulse of given width, delayed a specified length of time from a reference pulse. The usual circuitry for doing this requires two one-shot multivibrators followed by an isolation-amplifier output, a total of five stages.

It is possible to build such a two-multivibrator combination using only three stages. The isolation amplifier would require a fourth stage. The circuitry has the form shown in Fig. 1, and the switching sequence is given in the table.

Switching Sequence

Step	V_{1A}	V_{1B}	V_{2A}
1	OFF	ON	ON
2	ON	OFF	ON
3	ON	ON	OFF
4	OFF	ON	ON

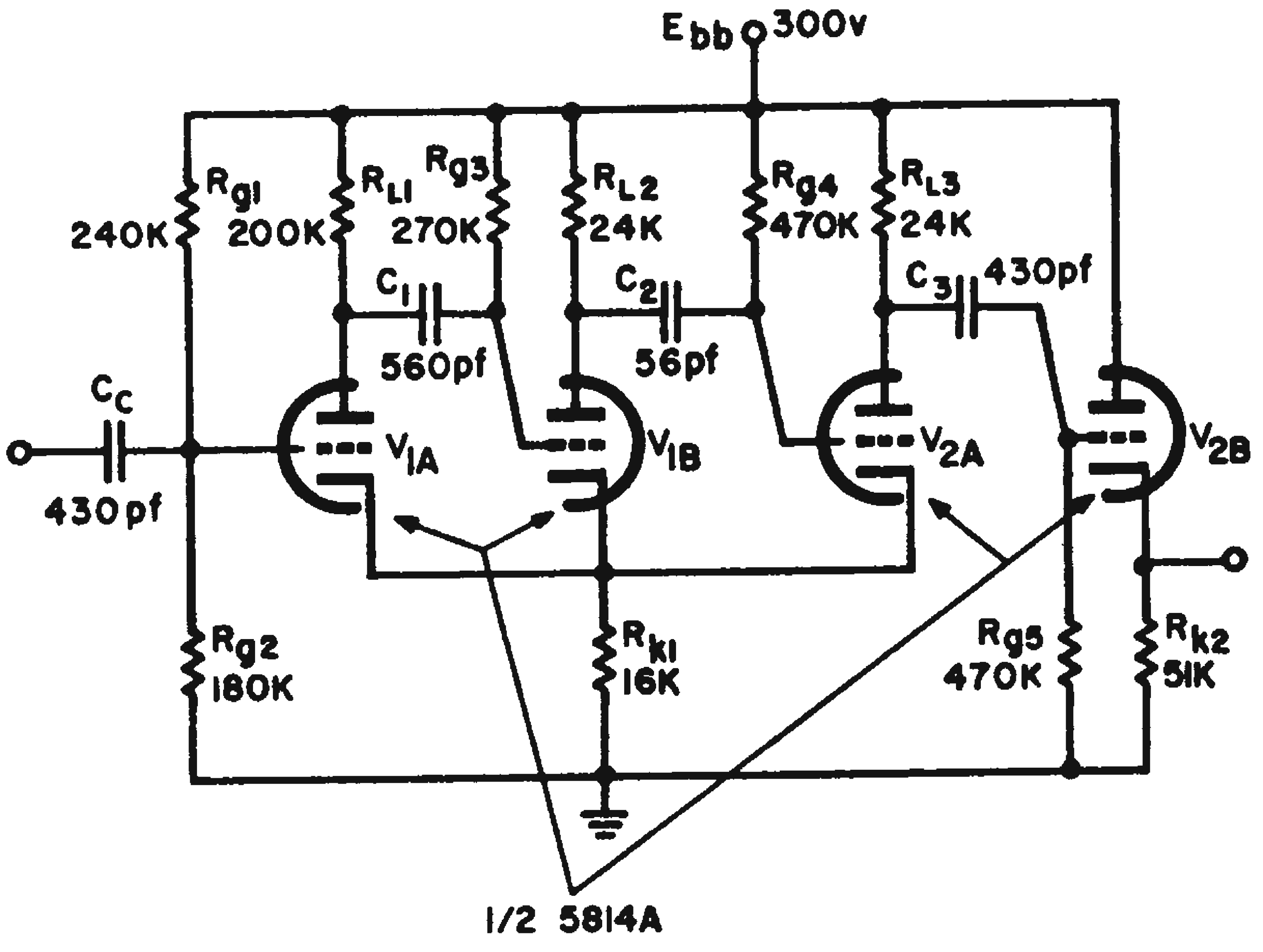

Using component values shown, output of generator will be a 15-μsec pulse delayed 8 μsec from trigger.

Stages V_{1B} and V_{2A} have identical plate resistors and the current in them is about the same. The value of R_{L1} is much larger than R_{L2} and R_{L3}. The common cathode voltage, then, is determined by the current in tubes V_{1B} or V_{2A} or both. The current through the common cathode resistor (R_{K1}) during steps 2 and 3 when only V_{1A} or V_{2B} is conducting is about two-thirds the current during steps 1 and 4 when both V_{1A} and V_{2B} are conducting. Grid voltage of V_{1A} is held constant at a value that cuts off V_{1A} when both V_{1B} and V_{2A} are conducting, but allows V_{1A} to conduct when only V_{1B} or V_{2A} alone is conducting. The combination $R_{g3}C_1$ and $R_{g4}C_2$ give the desired delay and pulse width.

A positive input pulse will cause stages V_{1A} and V_{1B} to switch. The plate of V_{1B} rising to a more positive voltage only drives V_{2A} temporarily into harder conducting. With V_{1A} and V_{2A} conducting, common cathode voltage is about two-thirds of its initial value. After time-delay capacitor C_1 has discharged to a point where V_{1B} begins to conduct, the plate voltage of V_{1B} falls and stages V_{1B} and V_{2A} switch.

The common cathode voltage does not change during the latter switch and stage V_{1A} remains in a conducting state. After pulse-width capacitor C_2 has discharged to a point where V_{2A} begins to conduct, stages V_{1A} and V_{2A} switch and the circuit resumes its initial conductance state. During this last switch there is feedback from V_{1A} through V_{1B} which opposes V_{2A} turning on. This effort can be reduced by making the value of R_{g3} somewhat smaller than normal.

Stage V_{2B} is an isolation amplifier. The output will be a pulse of width determined by $R_{g4}C_2$ and will be delayed in time by an amount determined by Rg_3C_1.

W. L. Lassetter, engineer, Sperry Piedmont Co., Charlottesville Va.

SCR Drives Cold Cathode Counter Tube

Miniature silicon-controlled rectifiers can be used to produce the high-voltage guide pulses necessary to drive a cold-cathode counter tube. This method simplifies the counter-tube drive circuits and requires less power and space than vacuum-tube drive circuits. The circuit used is shown in Fig. 1.

For reliable operation of the counter tube, a 140-v negative double pulse must be applied to the guides. The pulse widths must be at least 60 μsec, however; for lower counting rates (below 50 kc) longer pulse widths can be used.

A positive 3-v pulse applied to the gate turns the SCR on. Resistor R_1 limits the current through the SCR to a value well below the holding current so the SCR regains its open state upon the termination of the input pulse. The output pulse is applied to the two guides through resistors R_3 and R_4. Capacitor C_2 and resistor R_4 delay the pulse to guide 2. The guide pulses are as shown. Resistors R_6, R_7, R_8, and R_9 supply the guide bias.

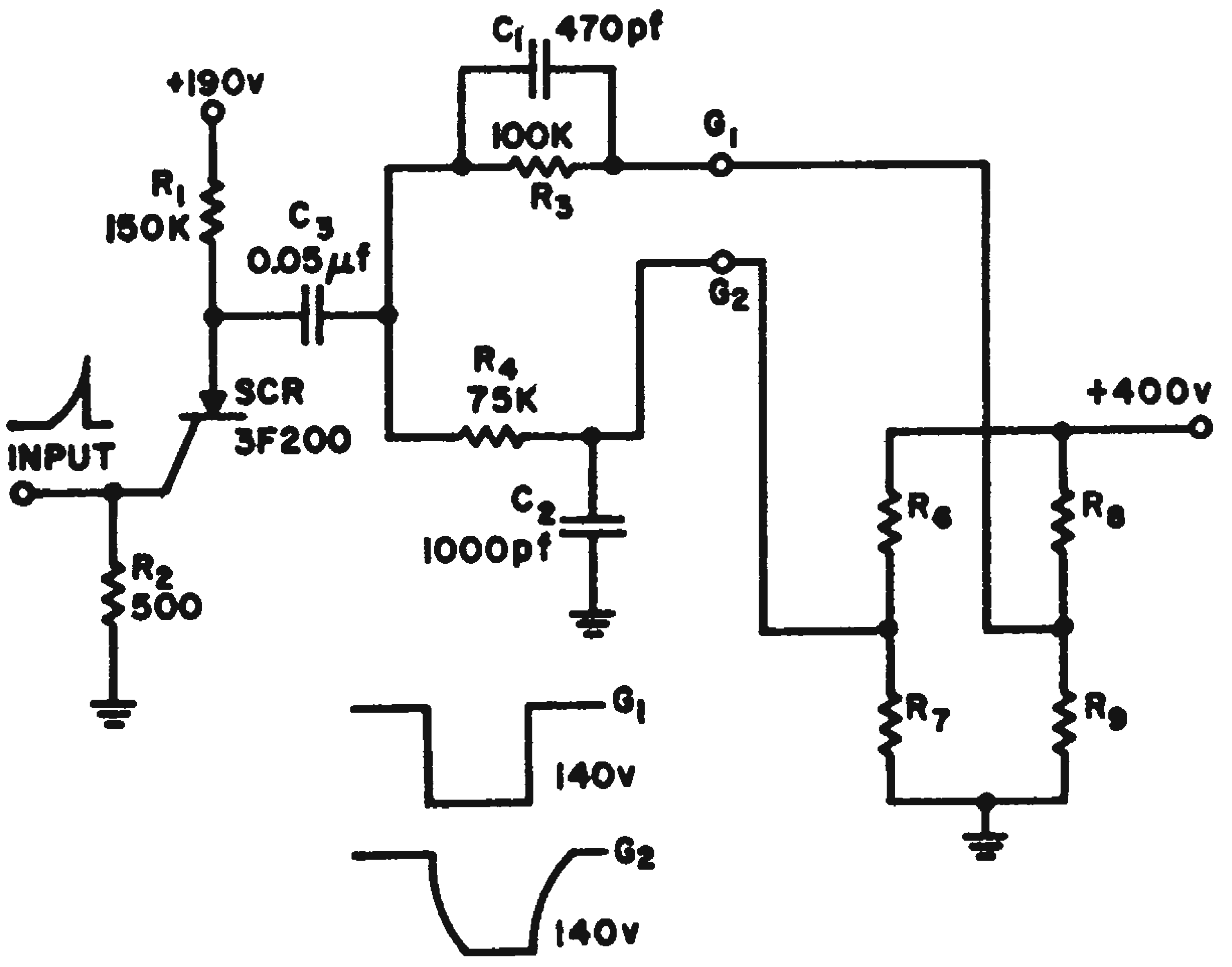

Fig. 1. Double pulse for counter-tube drive is obtained from SCR output. Output waveform is as shown.

M. W. Egerton, Jr., engineer, Towson Laboratories, Inc., Towson, Md.

Simple Gates Provide Binary Scale-of-Ten Counter

Problems attendant to scale-of-ten counters have been widely discussed and many solutions have been proposed. All of the remedies known to the author have one of the following disadvantages:

(1) The counter is prematurely "forced" to a higher count so that the final state is equivalent to a binary 15. The problem here is that while only 10 states are allowed, the count does not follow the normal binary sequence.

(2) The 11th binary state (1010) is sensed briefly and used to provide a reset to the affected decade as well as a "carry" to the next decade. The problem here is the transient 11th state which may be highly undesirable.

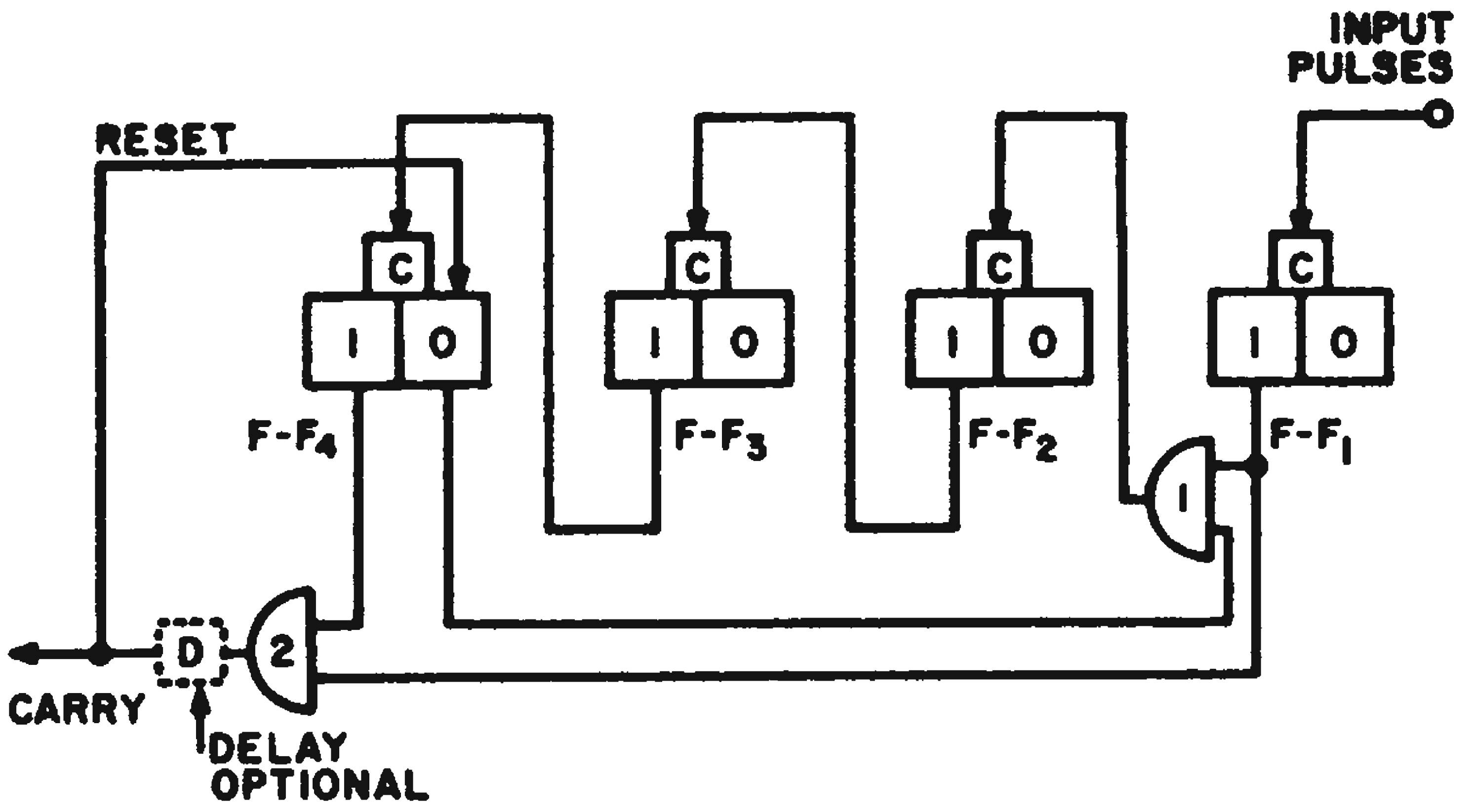

Steering gates provide binary output to count of ten. Carry to next flip-flop occurs on 1-to-0 change of state.

The addition of two simple "steering" gates, as illustrated, solves both problems. Gate *1* allows the binary count to proceed normally to the count of eight at which time flip-flop *4* goes to the "one" state, and Gate *1* is disabled while Gate *2* is enabled. The count of nine occurs normally. When the 10th input pulse occurs, flip-flop *1* returns to the "zero" state causing propagation of a pulse through gate *2*, thereby generating both a reset for flip-flop *4* and a carry to the next decade. A delay element may be inserted on the output of Gate *2* to prevent a timing hazard in high-speed circuits.

Leonard J. Nunley, senior electronics engineer, Recognition Equipment, Inc., Dallas, Tex.

Mercury Relay Makes Fast-Rise Pulse Generator

Generation of suitable pulses for measuring delay and rise times in computer and pulse work often presents a problem. The fact that some mercury relays have a "make before break" characteristic, can be used to generate a fast rising pulse with little overshoot or tilt.

The amplitude versatility and choice of

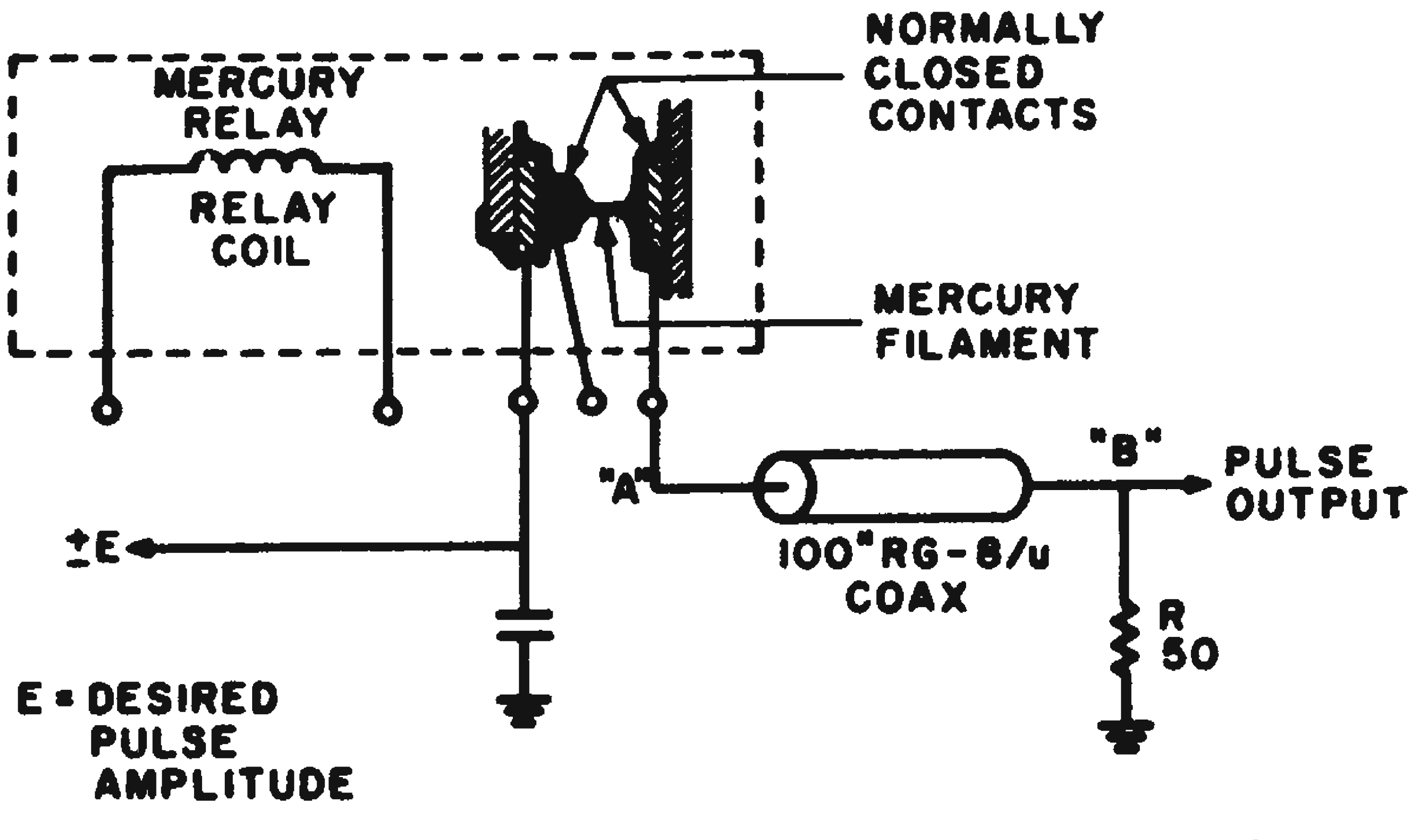

Fig. 1. Simple pulse generator uses mercury relay to provide fast rise pulses.

polarity, plus the excellent wave shape, outweigh the fact that the pulse width is determined by the geometry of the relay. In the units tried (Clare HG 1005 and Western Electric 275C), pulse width is about 250 μsec. Coil-driving current can be adjusted so the "make" pulse width equals the "break" pulse width.

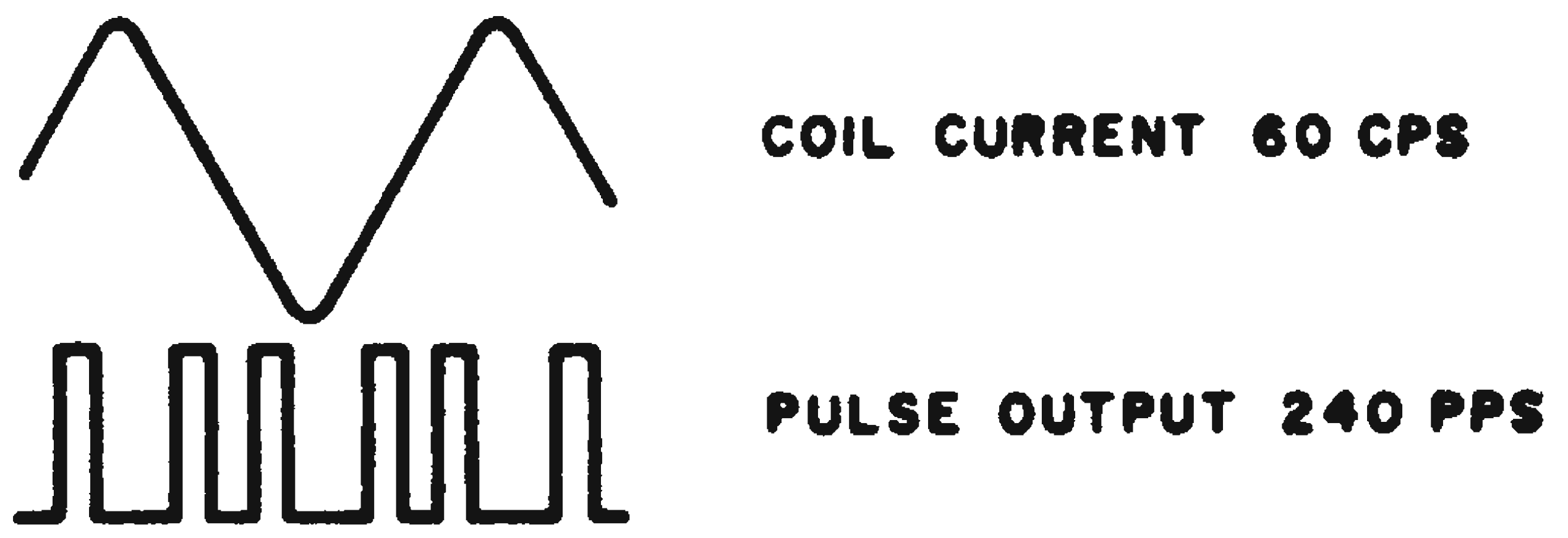

Fig. 2. Pulse output obtained with 60-cps coil current.

The 50-ohm resistor also may be returned to *A* voltage if desired to determine the base line of the pulse.

J. R. Bowers, Applied Mathematics Div., Argonne National Laboratory, Argonne, Ill.

Blocking Oscillator-And Gate Produces Standard Output Pulse

Using only two transistors, the circuit shown checks for pulse coincidence and then produces a standard output pulse. Only when signals are applied simultaneously at both inputs will a pulse appear at the output.

A trigger pulse at input *2* is sufficient to trigger the blocking oscillator circuit. Since Q_1 is not in the regenerative path, the gate at input *1* must be as wide or wider than the blocking oscillator pulse to maintain Q_1 in a conducting state until the BO pulse is terminated.

Diode CR-1 prevents trigger signal feedthrough from input *2* into the transformer. The two resistors serve to isolate the circuit from the low-impedance sources.

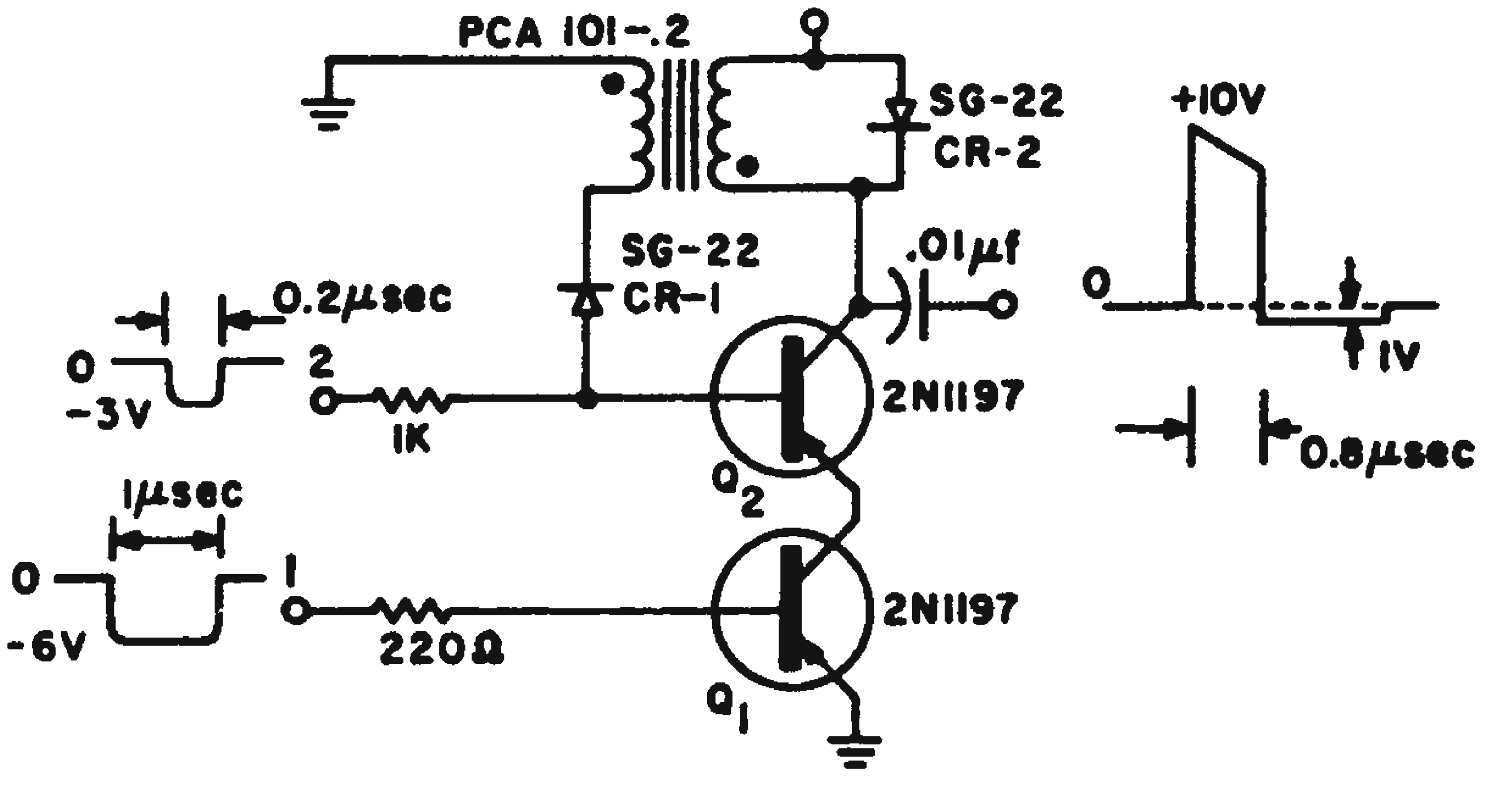

Blocking oscillator-and circuit checks for pulse coincidence, then produces a standard output pulse.

Alfred W. Zinn, project engineer, Farrand Optical Co., New York, N. Y.

Transistorized Voltage-Frequency Converter Operates Linearly

Developing a servo system using a digital motor, we needed a pulse generator that would produce a pulse rate directly proportional to a varying dc input voltage. Conventional generators would not do because (a) they produced an output even though there was no input and (b) they did not respond linearly to the voltage amplitude over a large enough output frequency range.

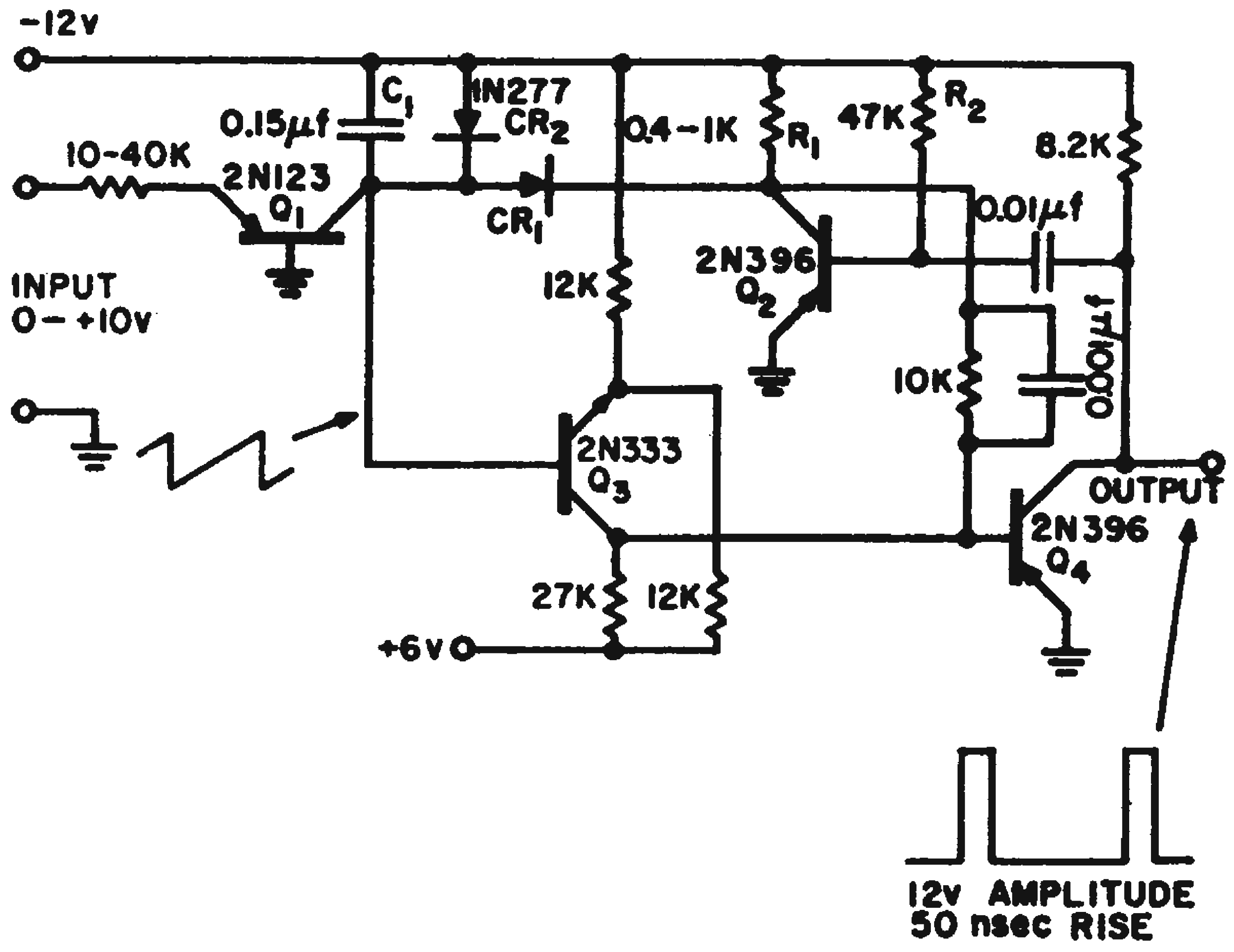

Pulse generator produces output pulses proportioned to a varying dc input voltage. With input of 10 v dc output is 300 pps.

With a voltage at the input, Q_1 acts as a constant-current source for C_1. This produces a linear slope until the base of Q_3 becomes forward-biased. The negative-going collector of Q_3 then starts the single-shot cycle of Q_2 and Q_1.

Transistor Q_2 is cut off and its collector goes negative. This allows C_1 to discharge through R_1. When the single-shot has completed its cycle the collector of Q_2 goes to ground and the input current again charges through Q_1. This restarts the circuit cycle.

Diode CR_2 passes the leakage currents of CR_1, Q_1 and Q_3. This prevents cycling at low frequencies when there is no input current, and allows the output to reach zero cps.

Modifications can be made to extend the frequency range, alter the input sensitivity and improve the low-end linearity. These steps depend, of course, on how the circuit will be used.

James M. Howe, electronic development, Navy Electronics Laboratory, San Diego, Calif.

Delay-Line Discriminator Detects Sequences of Pulse

A sequence of equally spaced pulses obscured by random or recurrent signals of period different from the period of the desired pulse sequence, can be detected with the circuit shown in the figure. It extracts the three pulses and generates a trigger when the third pulse is received.

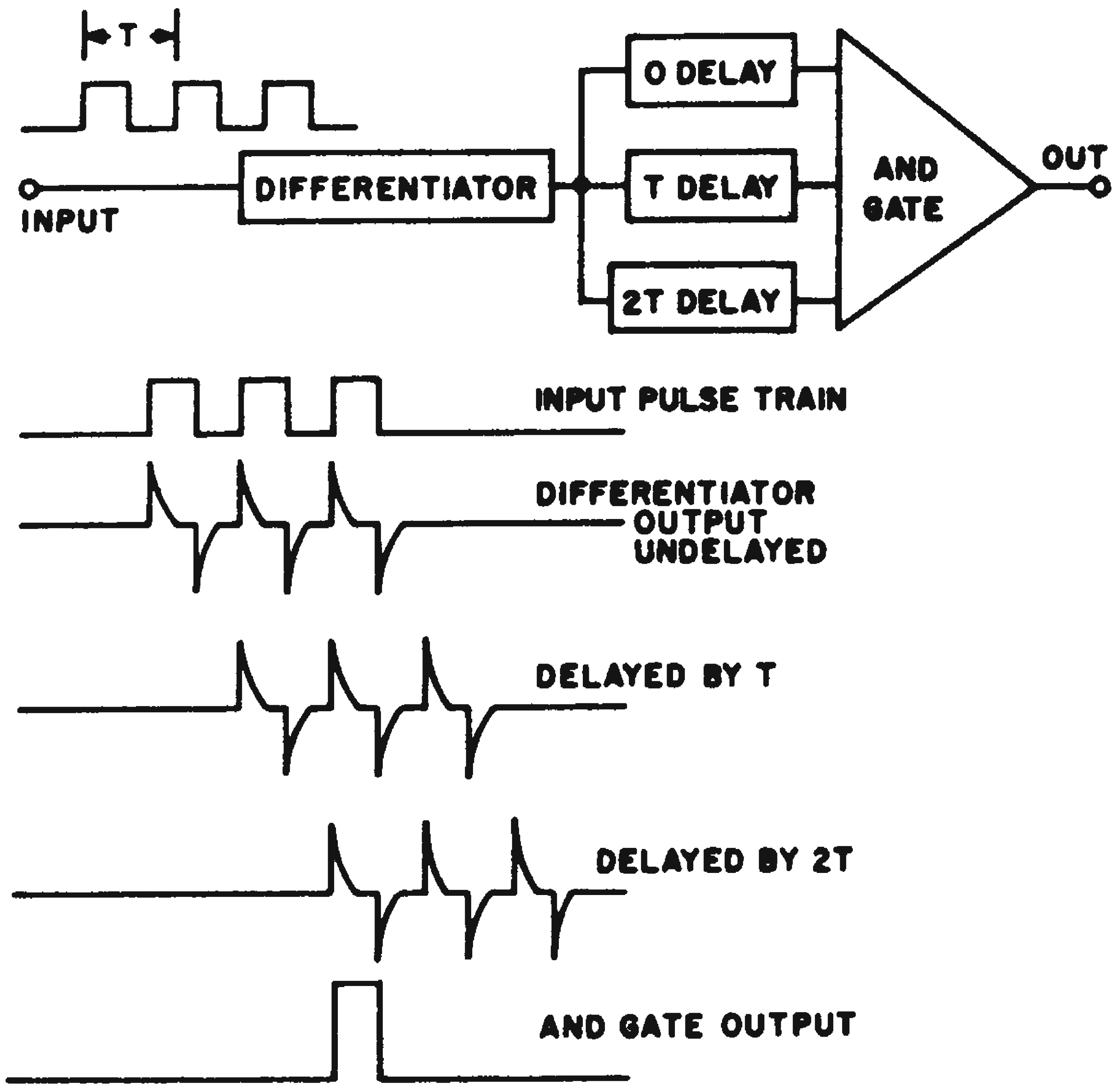

Sequences of pulses, here three pulses of proper width and repetition rate, are detected by combination of delay lines and AND gate. Time relation between pulses is also indicated.

The signal first is differentiated and then fed through parallel delay lines (with delays of *O*, *T*, and *2T*, respectively) to a 3-input "AND" gate designed to respond to positive signals. A trigger pulse is produced when three positive pulses (the differentiated positive peaks corresponding to the leading edges of the original pulses) are presented to the gate simultaneously. The time relationship between the various signals also is shown in the figure.

The circuit discriminates against both narrow and wide random pulses. Increasing the number of pulses in the sequence and the number of delay lines (with delays of *O*, *T*, *2T*, . . *nt*) reduces the possibility of response to spurious signals to an insignificant level.

Admittedly a single, tapped delay line might be used; however, pulse attenuation and rise time complications might result. Untapped delay lines are generally easier to obtain, and they allow operation at low impedance levels.

R. Michel Zilberstein, sr. project engineer, Andersen Laboratories, Inc., West Hartford, Conn.

FM Preserves Pulse Polarity In Ultrasonic Delay Lines

When unipolar pulses are used, amplitude modulation can be applied to a delay-line carrier signal with no problem. However, when both positive and negative pulses must be delayed, a different technique is needed, since a dc reference cannot be propagated in this type of delay line.

A simple solution to this problem is to use frequency modulation, as shown in the figure. A positive pulse will cause the voltage-controlled oscillator frequency to increase while the negative pulse will cause the frequency to decrease. The fm detector then will yield a pulse of polarity dependent on the input pulse polarity.

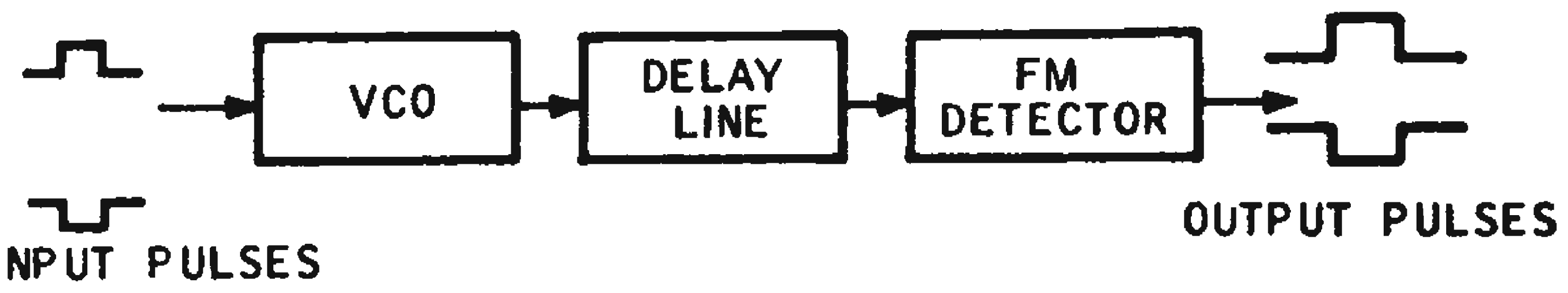

Voltage-controlled oscillator and fm detector provide polarized outputs from delay line.

The VCO must have a linear frequency vs voltage characteristic over the dynamic range of interest to preserve accurate pulse amplitude information.

Robert A. Durand, electrical engineer, The Bendix Corp., Bendix Systems Div., Ann Arbor, Mich.

Indicating Shift Register Uses Silicon-Controlled Rectifiers

A compact shift register was required with a low standby power drain and a simple indicator system.

The shift register shown here was constructed using small silicon-controlled rectifiers. Only one SCR per stage of memory is required. Standby power (with register empty) is only a few microwatts per stage. Op-

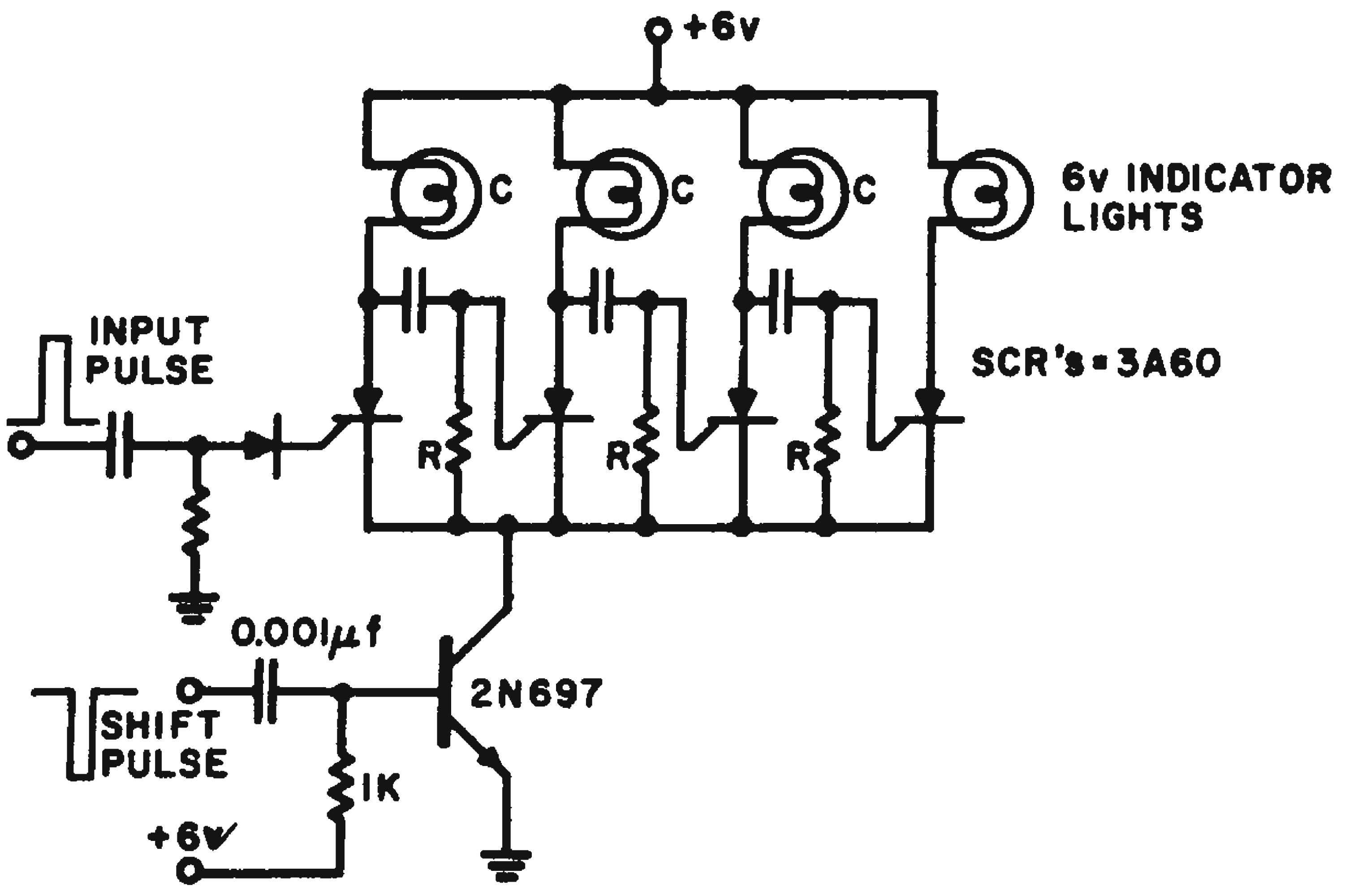

Use of SCRs provides high speed with little power drain in shift register.

erating speed is high because of the rapid switching of small SCRs. In the four-stage shift register shown, values of R and C are determined by input pulse length.

James M. Loe, circuit design engineer, General Electric Co., Philadelphia 1, Pa.

Tunnel Diode Triggers Avalanche Pulse Generator

An ultra-fast pulse generator utilizing the fast rise-time of a tunnel diode to trigger a transistor in the avalanche mode of operation is shown in the diagram.

To get a nanosecond trigger pulse of about 1 v, a TI-XA653 gallium-arsenide tunnel diode was used in a pre-pulse trigger circuit. This is done because the output pulse rise-time, to some degree, is dependent on the trigger rise-time. The fast negative trigger from D_3 is coupled to the emitter of T_1. T_1 normally is biased off by the drop across D_1. This negative trigger pulse is sufficient to drive T_1 into its avalanche breakdown mode. The output pulse, as a result of this breakdown, has a rise-time of 0.7 nsec, pulse width of 2 nsec. Pulse amplitude is 20 v into a 50-ohm load with a prf from 10Kc to 2 Mc. The pulse width may be varied by a transmission-line pulse-forming network.

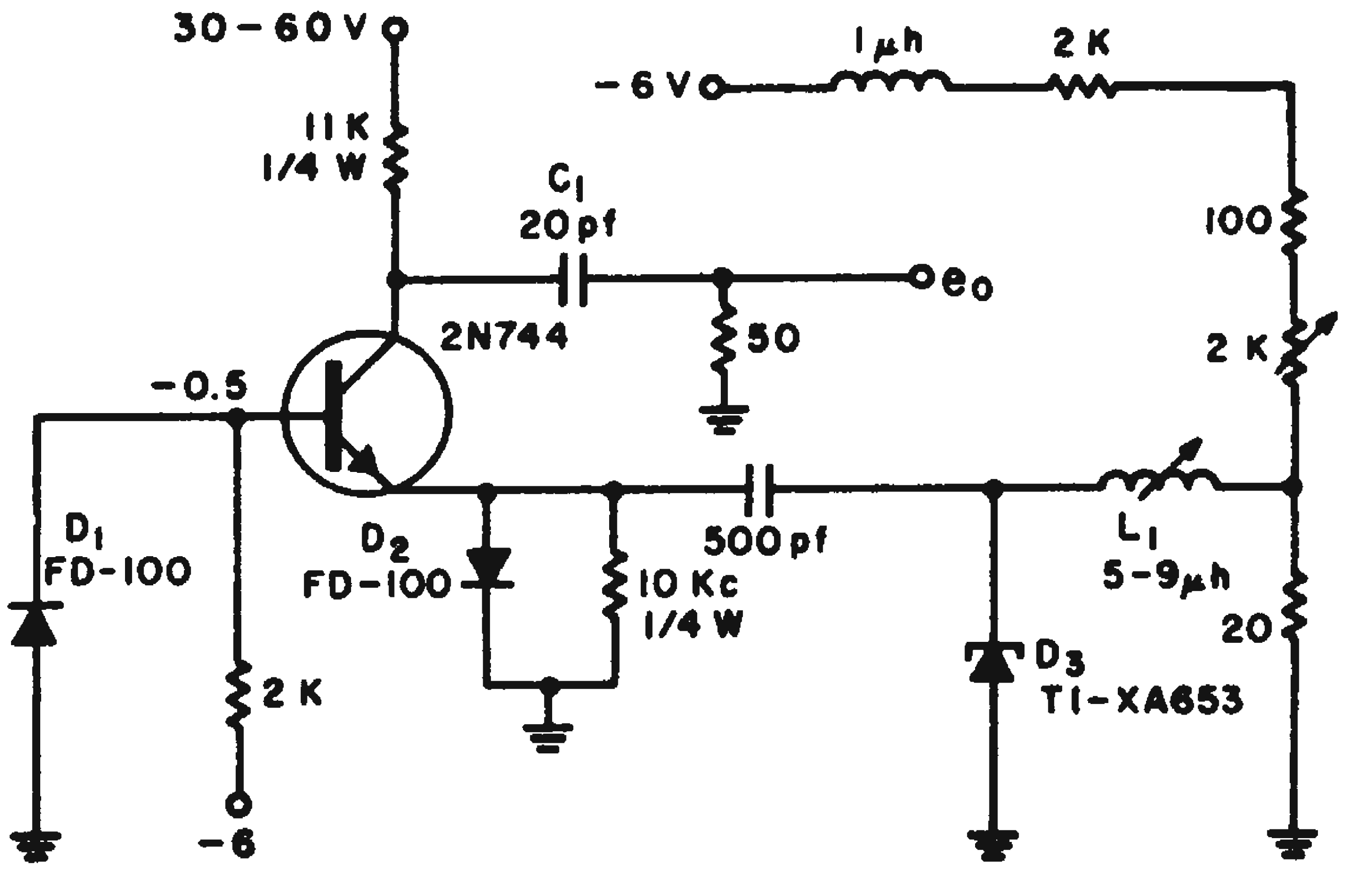

Tunnel-diode pulse generator provides 0.7-nsec rise time.

The circuit must be layed out with strict attention to rf considerations. It should be packaged in a strip-transmission-line configuration. T_1 is a 2N744, which will exhibit avalanche breakdown tendencies with an E_{cc} under 24 v when properly biased.

James R. Williams, design engineer, Sanders Associates, Inc., Inglewood, Calif.

Fixed Interval Timer Gates Random Pulse Stream

A simple method was needed to derive a gate signal whose duration equalled that of a complete random stream of pulses, plus a fixed period of time. It is assumed that the time between any two pulses in the stream does not exceed this fixed period. A short-term stability was all that was necessary.

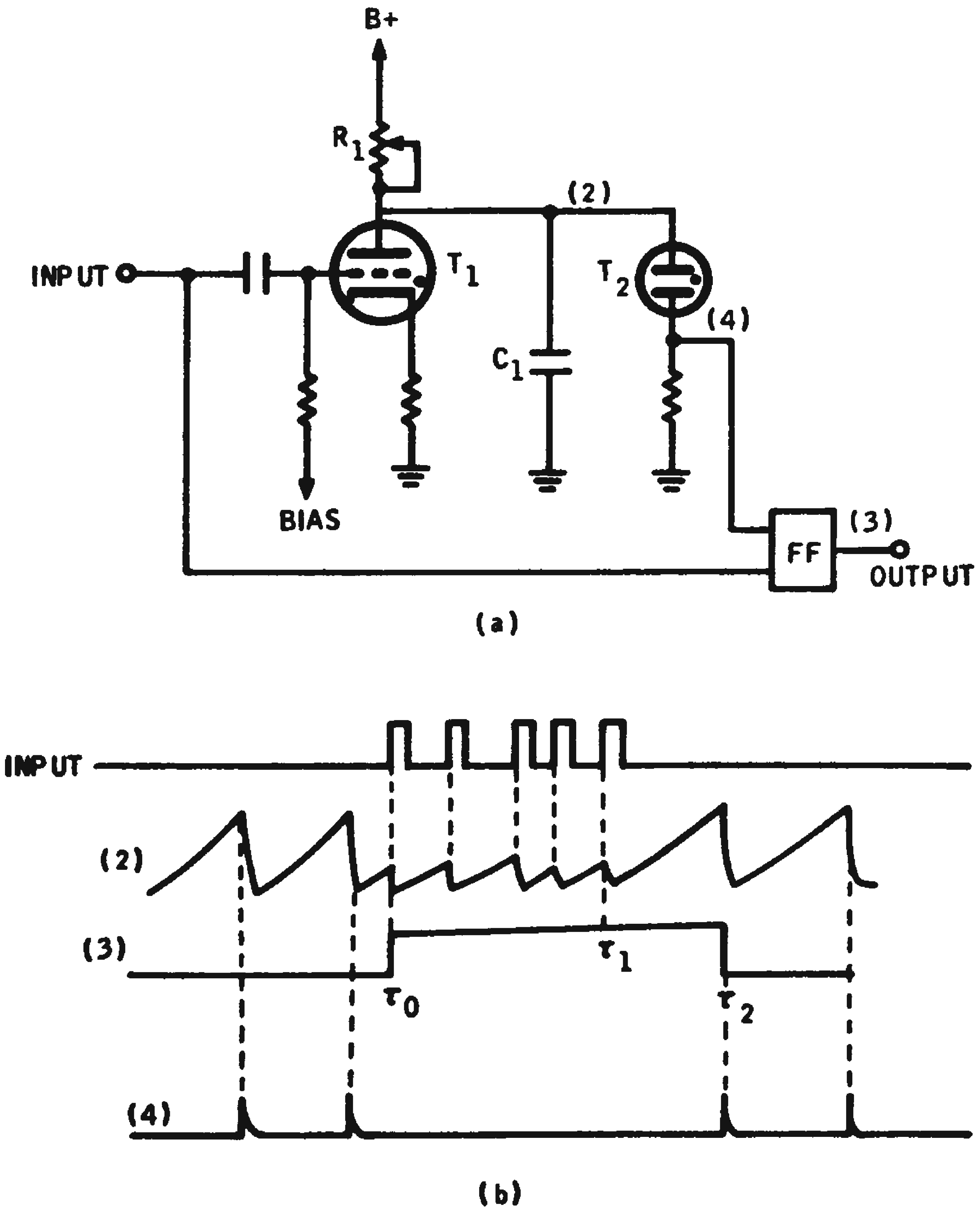

Fig. 1. Flip-flop pulse gate (a) provides gating waveform (b) for random pulse train.

Fig. 1a shows a simple method to accomplish the above. The operation is as follows: T_1, R_1 and C_1 comprise a free-running sawtooth generator. The breakdown voltage of T_1 is higher than that of T_2 so that the output at the cathode of T_2 in the quiescent condition (previous to time t_0 in waveform (4) of Fig. 1b) is a series of pulses. When the first input pulse arrives it fires T_1 before its plate voltage reaches the breakdown potential of T_2. Initially the flip-flop was reset by the pulses at point (4), so that the initial input pulse sets the flip-flop at time t_0. At time t_1 the last pulse ends and permits C_1 to charge to the breakdown potential of T_2. The flip-flop is now reset and waveform (3) results, where $(t_2 = t_1)$ is the desired fixed period of time. By varying R_1 the designer can compensate for any long-term changes in T_2.

Irving Bayer, senior member technical staff, Radio Corp. of America, New York, 13, N. Y.

Transistor Stage Yields Polarity-Controlled Output

In data-handling applications, it is often necessary to change the polarity of an input signal upon command.

This circuit function is usually accomplished by inverting the input signal and gating the inverted signal and the input signal with complex control gates. A simpler circuit for performing this operation is shown here.

When $E_1 = +V$ and $E_2 = -V$, the circuit operates as an inverter with a gain of one. Any negative input voltage will yield a positive output with the same amplitude. With zero potential input, the output will yield a potential close to ground, since the forward voltage drop of CR_2 is approximately the base-to-emitter voltage drop of Q_1. For this condition, the circuit input impedance is βR_1 and the output impedance is R_1.

When $E_1 = -V$ and $E_2 = +V$, the circuit acts as a direct path between the input and output. Transistor Q_1 saturates, since the back-biasing of CR_2 causes the collector load impedance to become very large. The collector is clamped to the emitter and hence follows it. Therefore, the collector voltage will be equal to the input voltage less the base-to-emitter voltage drop of Q_1. The input impedance to the saturated transistor becomes R_1.

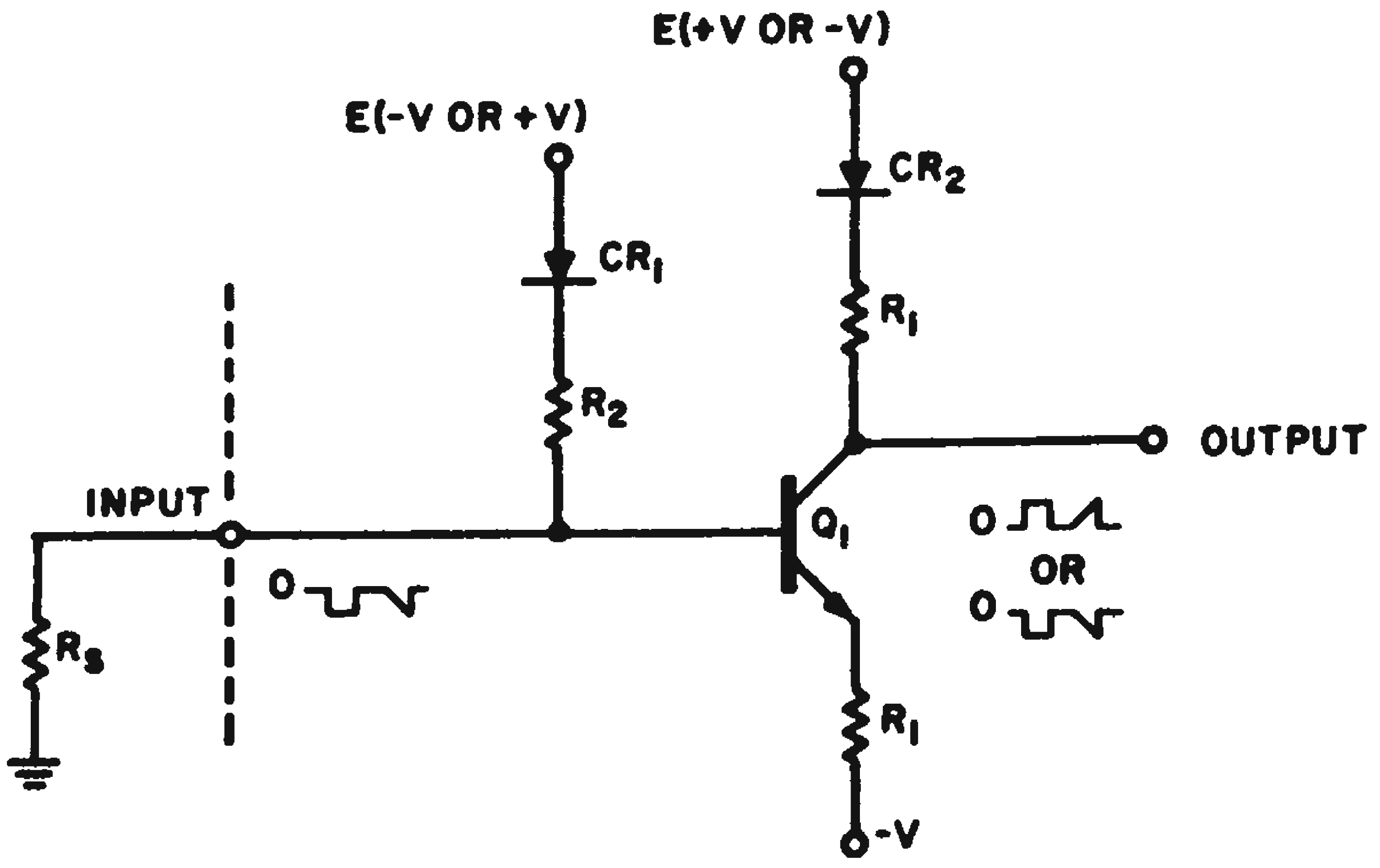

Reversing supply voltage polarities provides positive and negative outputs.

To keep the output quiescent level at ground, R_2 biases the base to $+V_{BE}$. The value of R_2 depends on the value of R_1, the forward voltage drop of CR_1 and the source impedance R_s. The input impedance to the circuit in the saturated condition becomes R_1 in parallel with R_2. The output impedance is R_1 in parallel with R_2 and R_s.

Control for this circuit can be derived from either a switch or a pnp multivibrator. Inputs can be any unidirectional signal. Refinements of this circuitry technique can adapt the circuit for special applications.

Frank A. Rappolt, engineer, Airborne Instruments Laboratory, Melville, L. I., N. Y.

SCR Charge-Discharge Circuit Samples Slow Rep-Rate Pulses

Amplitudes of pulses with very slow repetition rates—1 sec or more—must often be sampled in low-impedance transistor circuits. If the pulses are supplied by a low-impedance source, the charged-capacitor detector circuit shown in the figure can be used to good advantage. Because silicon controlled rectifiers are used to charge and discharge the capacitor, this unit can be made very large.

At time t_0, capacitor C is discharged to ground by the recycling pulse gating 'on'

SCR 1. This pulse occurs just before the sampling pulse.

When the current through *SCR 1* drops below the holding current, the SCR will turn itself off. *SCR 2* is then fired by the sampling pulse and the generator charges up the capacitor to the pulse voltage. Here, again, the SCR will turn off, when the current through it drops below the holding current, and the capacitor will then discharge through the load.

The maximum current through the SCR will be determined primarily by the turn-on time of the device, the generator impedance, and the amount of capacity used in the circuit. Current through the SCR is given by:

$$i = C\frac{dv}{dt}$$

where C is the capacitance, dv the amount of voltage in which the capacitor is to be charged, and dt is determined by the SCR turn-on time or the R_gC time constant (whichever is greater).

The turn-off point of the SCR depends on when the current through this device drops below the holding current, i_h. The current through the capacitance is determined by:

$$i = \frac{E_g}{R_g}e^{-t/R_gC} \text{ (neglecting } R_L)$$

When this is below the holding current the SCR will turn off.

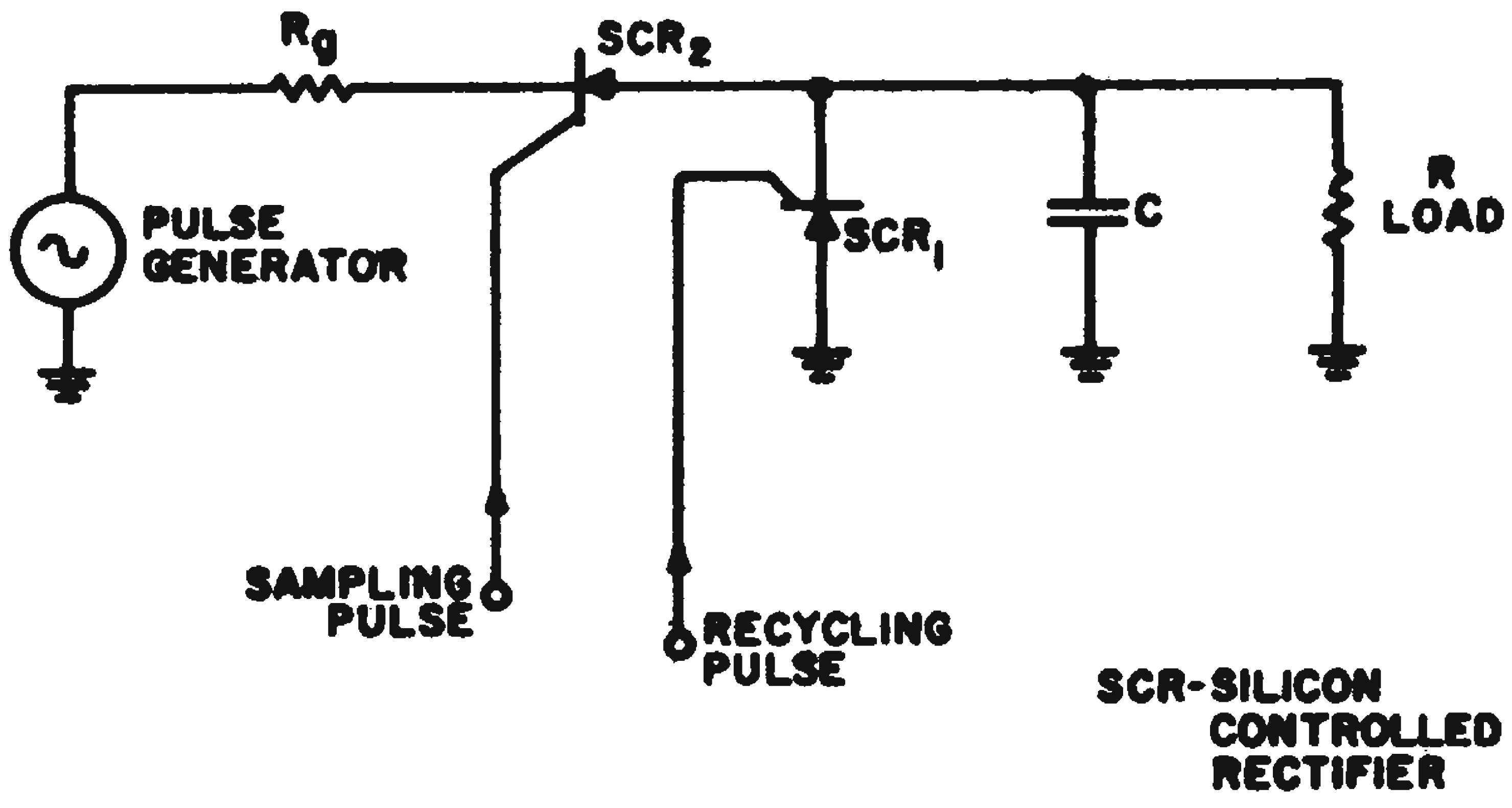

Amplitudes of slow repetition rate pulses are stored on capacitor C which is charged and discharged through SCRs *1* and 2.

Vito Del Guercio, electrical engineer, International Telephone and Telegraph Laboratories, Nutley, N. J.

Variable-Width Pulse Generator Provides Fast Rise/Fall Times

Stable, low-impedance, variable-width pulses suitable for shift register clear, shift or read-in pulses can be obtained from the generator shown here. The pulse width is adjustable from 2 through 15 μsec.

The generator is triggered by a positive pulse or transition which saturates Q_1. Transformer coupling provides a positive regenerative pulse to the base of Q_1. The amplitude of the feedback is controlled by R_2. When R_2 is minimal the feedback sustains an output for approximately 15 μsec when R_2 is maximum the output is approximately 2 μsec.

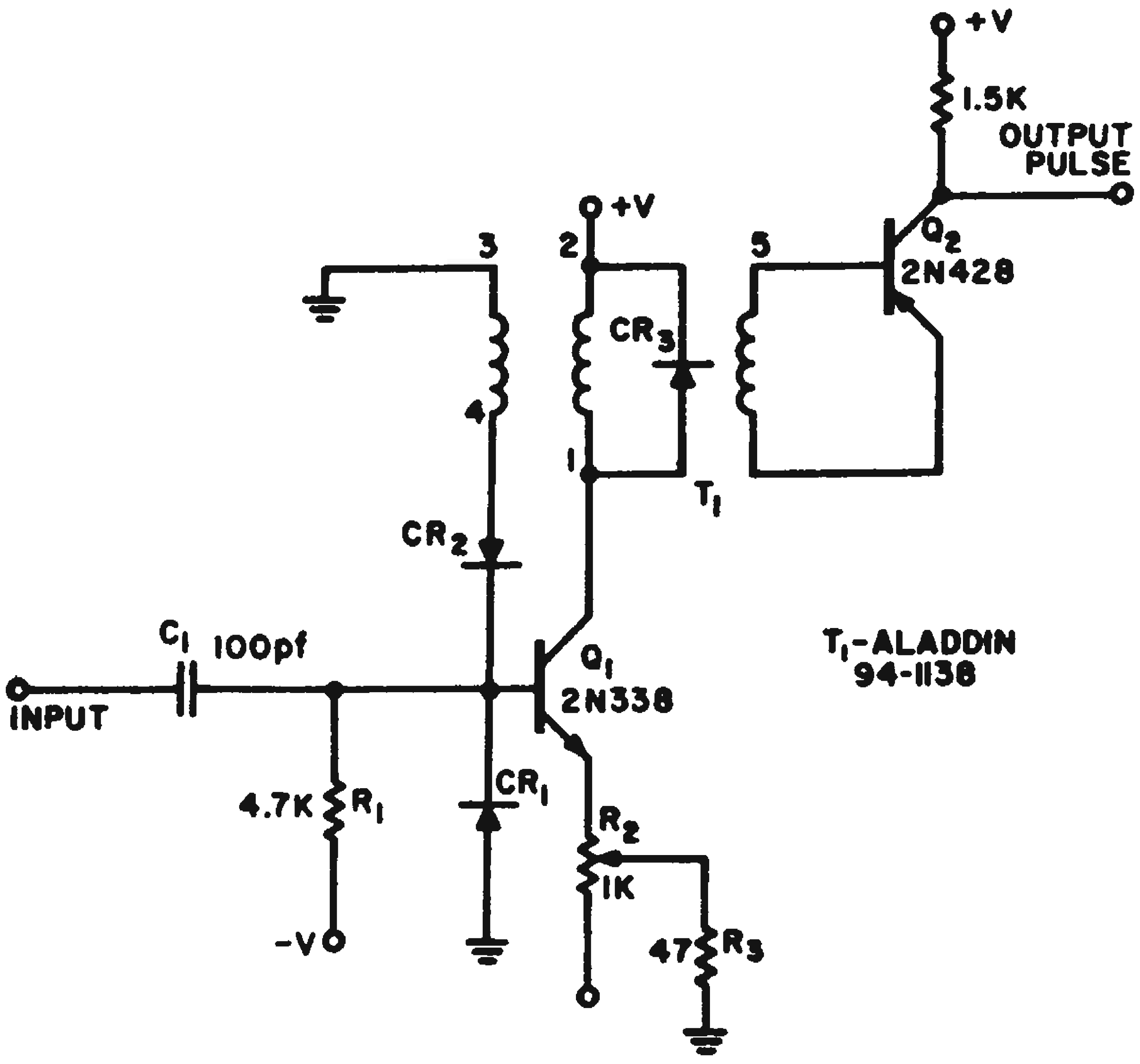

Pulse width of generator output varies less than ±10 per cent over temperature range for airborne equipment.

The transformer-coupled output is utilized to cut off a pnp stage and provide a positive output pulse. Diodes CR_1, CR_2 and CR_3 are utilized to prevent negative transitions from causing false triggering. Rise and fall times are from 0.1 to 0.2 μsec.

David W. Gray, Electronic Communications, Inc., St. Petersburg, Fla.

Root Taker Using Biased Diode Networks

Often, a given quantity must be raised to a fractional or a decimal power. This circuit performs such an operation by taking an analog voltage input V_{in} and producing an output $(V_{in})^a$, where A is any decimal number less than one.

Output voltage V_c is a nonlinear function of the input. It is adjusted by means of the variable potentiometers R_{1b} through R_{nb}. The required nonlinear characteristic is generated by straight-line segments approximating the desired fractional power curve. An application for the device would be, for instance, solving for the diameter of a circle (the output, given the area of the circle as the output). Here, the potentiometers would be adjusted to give the square-root, or $A = 1/2$.

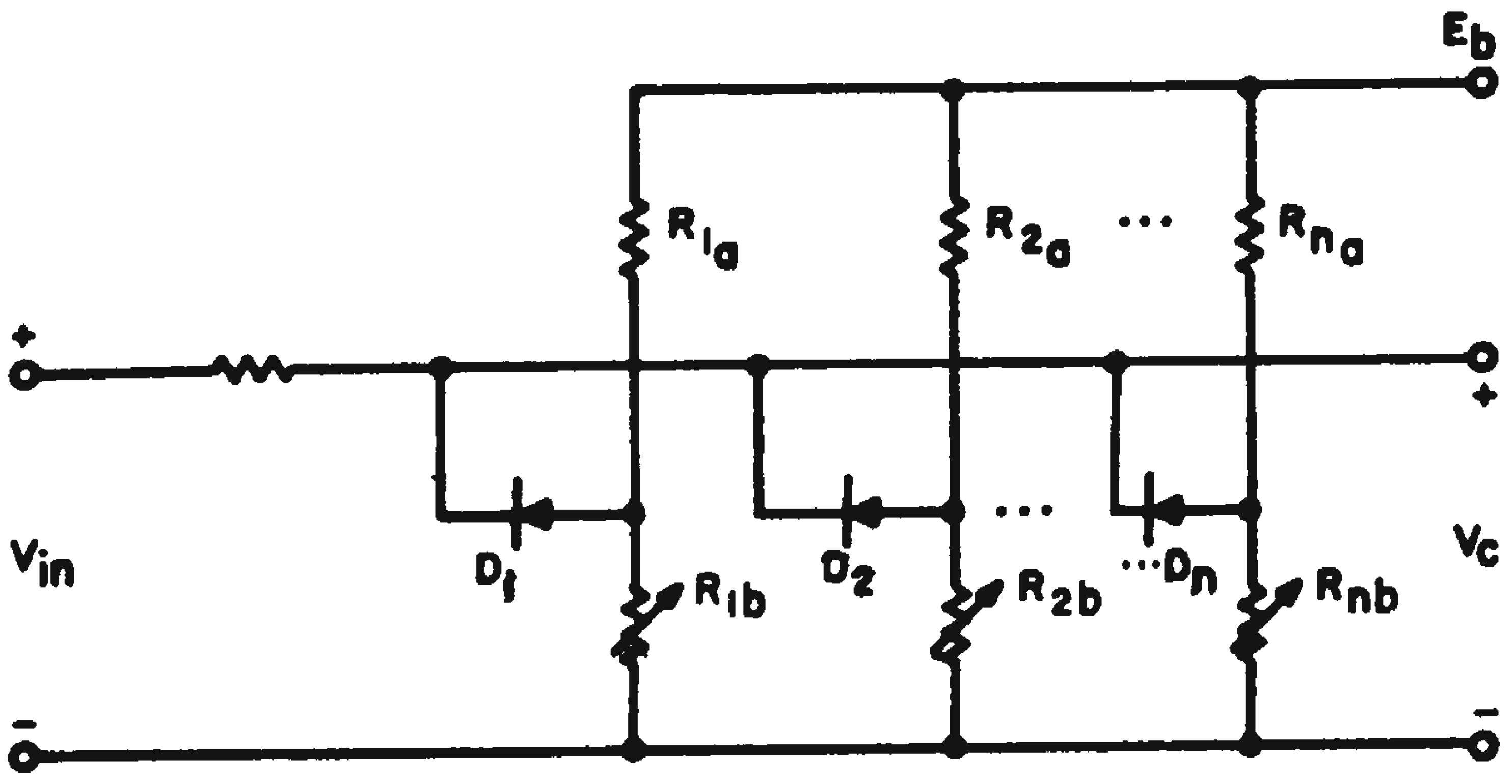

Straight line segments are used to generate nonlinear waveform.

Richard A. Dye, associate scientist, Lockheed Missile and Space Co., Palo Alto, Calif.

Gate Circuit Inhibits Pulses on Command

We required a gate circuit for our logic system that would pass or inhibit positive-going pulses on command. The input (signal to be gated was a Gv square-wave train of pulses that could be at any frequency from dc to 200 Kc. The control (gating signal) was to have two levels; +Gv open, and 0v closed. The circuit decided upon is shown in the diagram. When Q_1 is saturated by a control signal greater than +4 v, the gate is open and an input pulse will, after being differentiated by C_1 and R_3, saturate Q_2. It thereby presents the inverted Q_2 base signal at the collector of Q_2, as shown. In practice, R_L is usually the load in a flip flop or monistable.

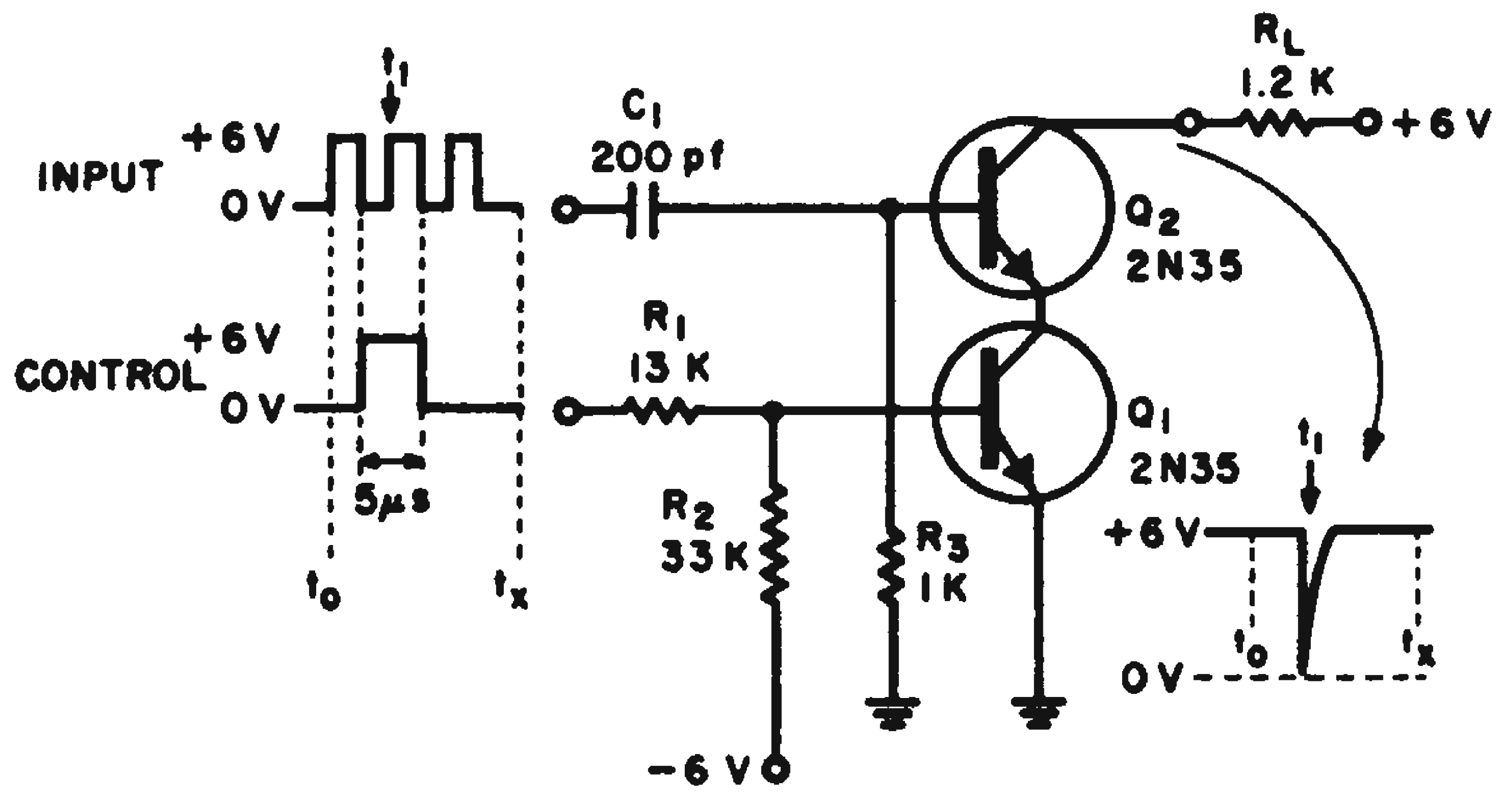

Simple gate is opened by saturation of Q_1 by pulse larger than 4 v.

R. Rehfieldt and V. Gavoiosi, electronic engineers, Computer Systems, Inc., Monmouth Junction, N. J.

Two-Transistors, Feedback Produce Free-Running Pulser

A regenerative loop consisting of a common-base amplifier, Q_1, driving an emitter follower, Q_2, produces a simple, free-running pulse generator, Fig. 1. Pulse width is controlled by R_2C and pulse repetition rate is controlled by R_1C.

With only a slight modification the circuit can be triggered as shown in Fig. 2.

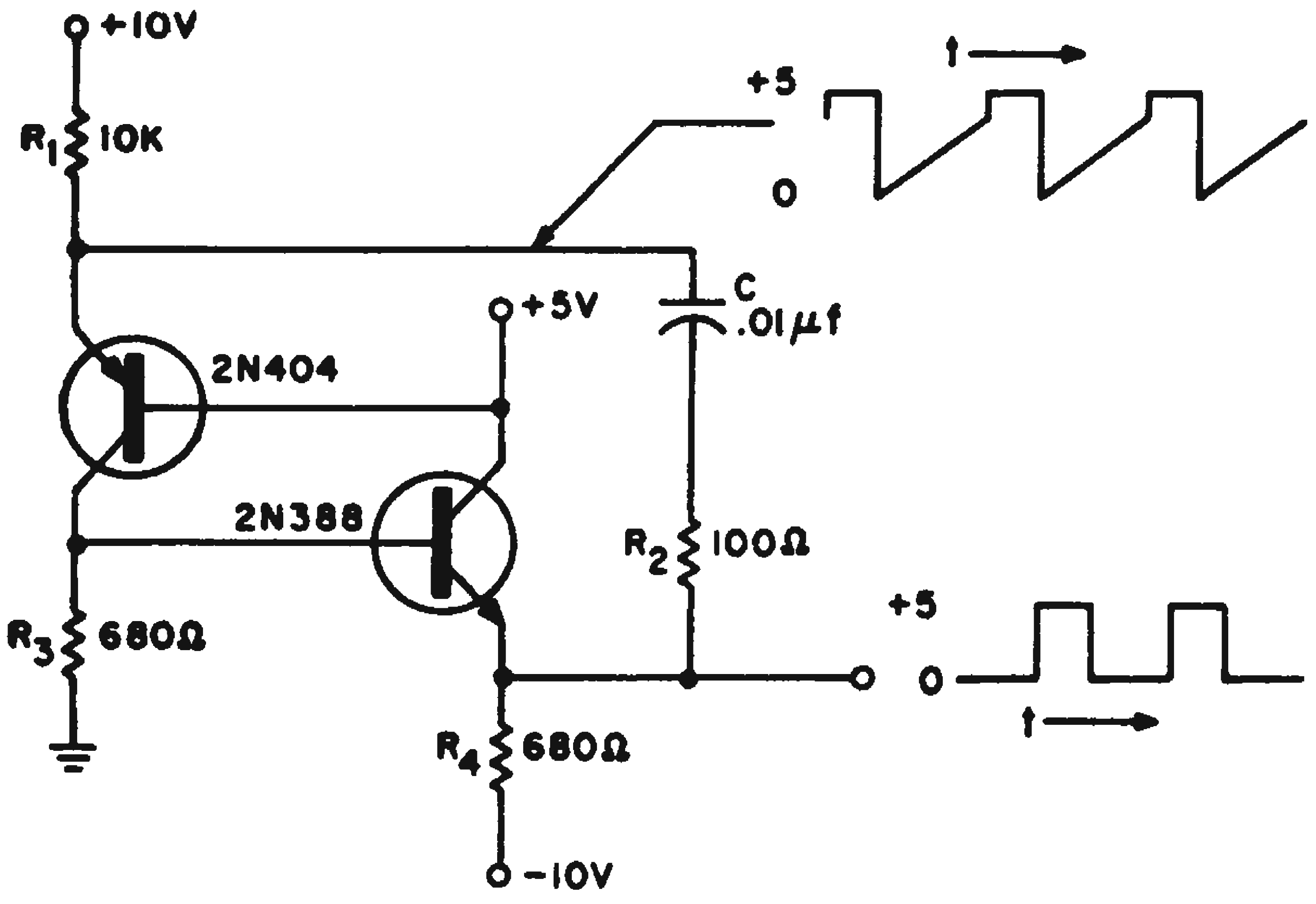

Fig. 1. Common-base amplifier Q_1 and emitter-follower Q_2 connected by a regenerative loop from free-running pulse generator.

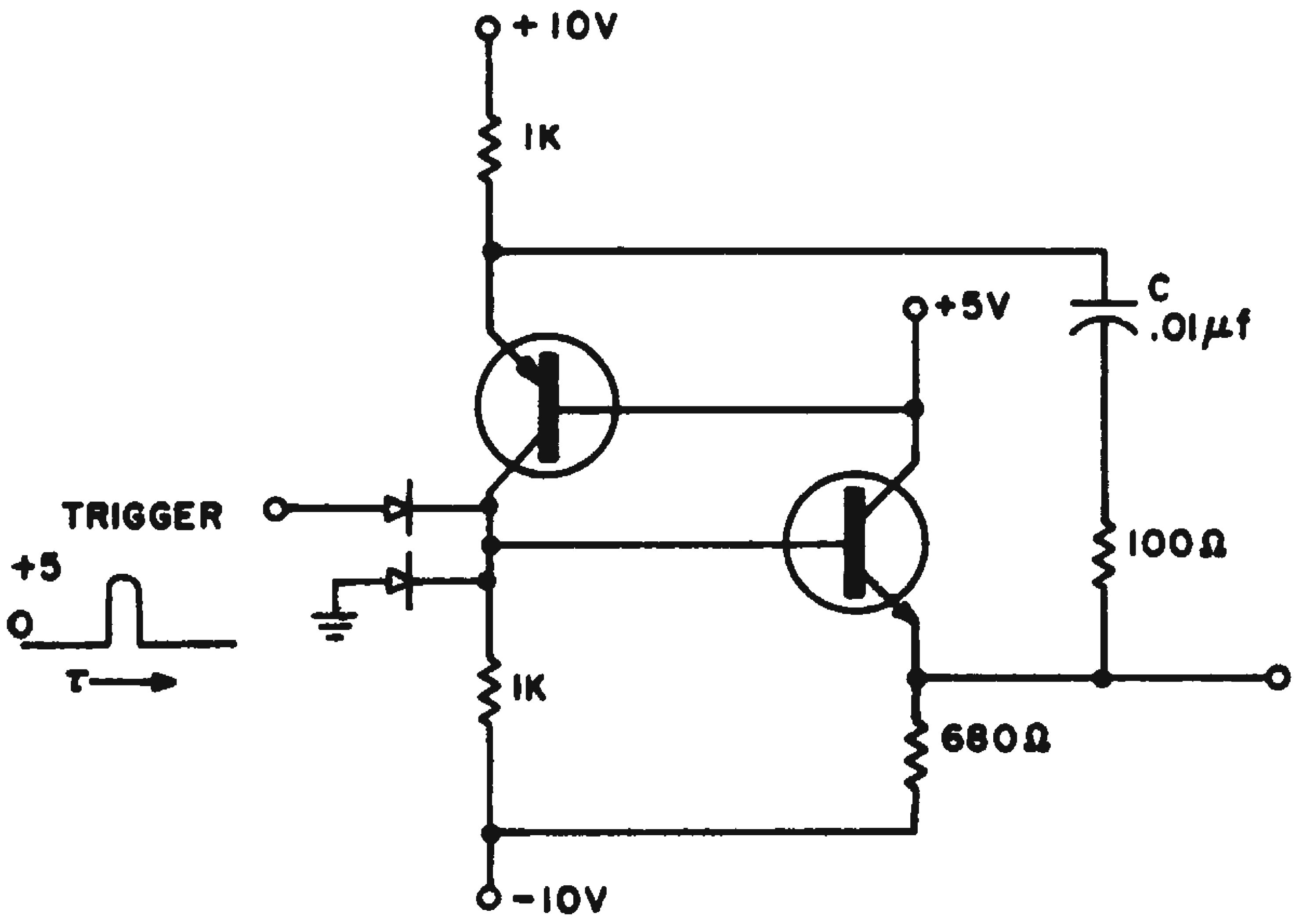

Fig. 2. With slight modification circuit of Fig. 1 may also be externally triggered.

Paul Lucas, design engineer, Adage, Inc., Cambridge, Mass.

Inverted Exclusive-OR Circuit Compares Binary Bits

Binary bits taken from a film store had to be compared with binary numbers set on switches. The comparison was made with a circuit, Fig. 1, which uses a single transistor to perform the inverted exclusive-OR function:

$$\left[\overline{\bar{A}B + \bar{B}A}\right] = \left[AB + \overline{AB}\right]$$

With the preset switch open, the output signal will be high (+12 v) only if the film-operated switch is open. If the preset switch is closed, the output will be high only if the film switch is closed.

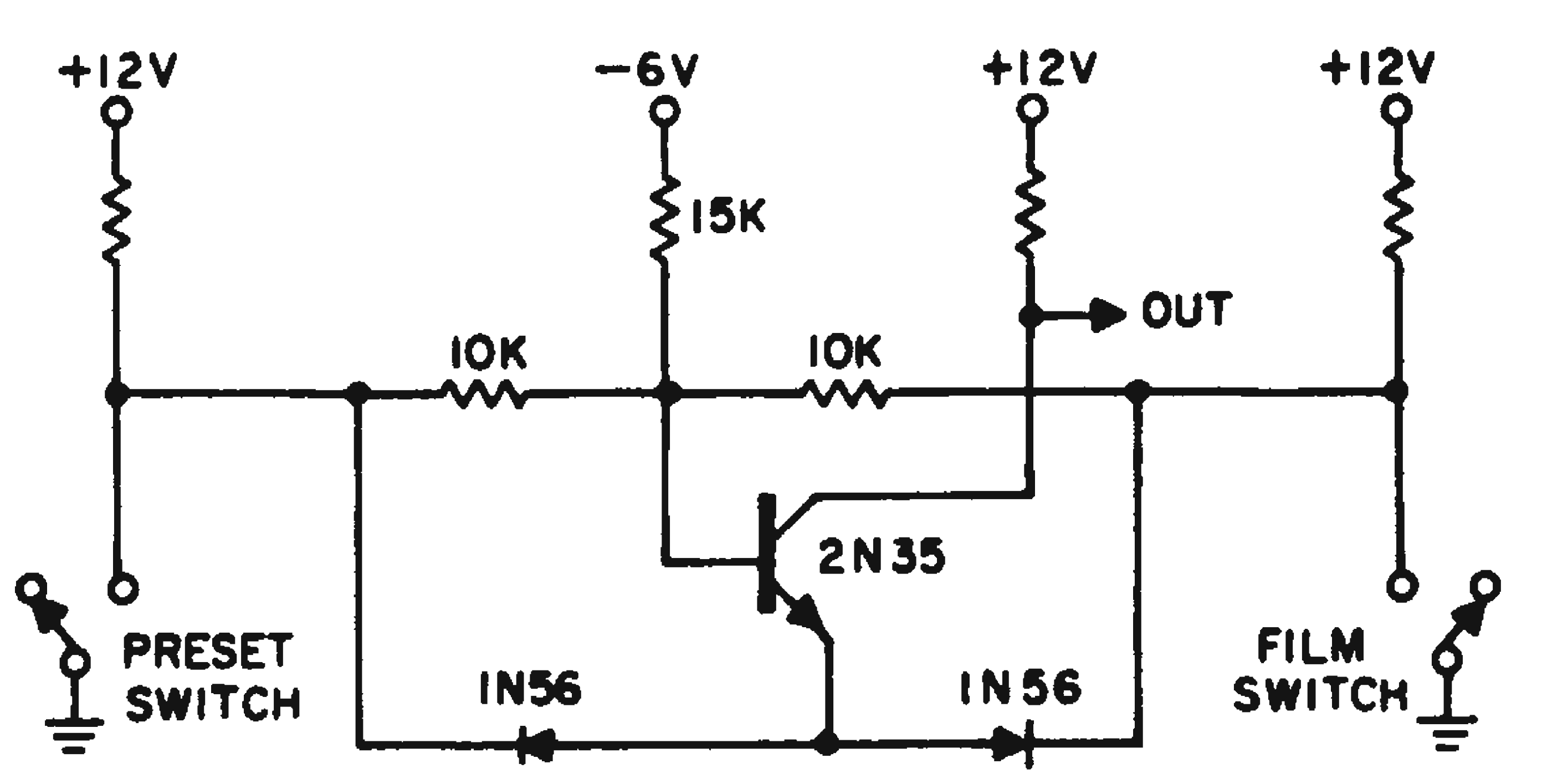

Fig. 1. Transistor and diodes are used to provide inverted exclusive-OR function for comparing binary bits.

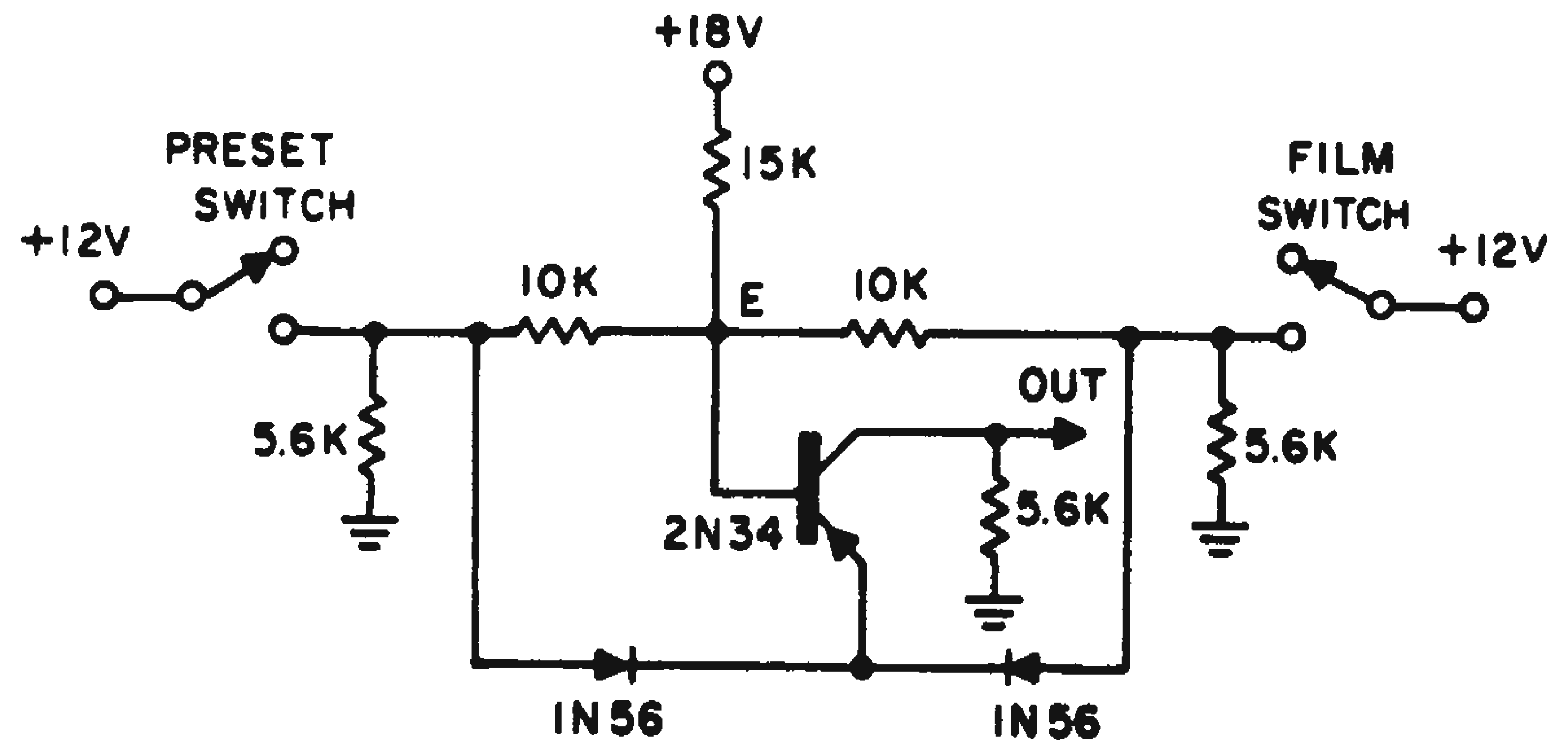

Fig. 2. Basic circuit of Fig. 1 can be modified to perform exclusive-OR function.

The circuit can be modified to perform the exclusive-OR function:

$$\bar{A}B + \bar{B}A$$

If the preset switch, Fig. 2, is open, the output signal is high only if the film switch is closed. With the preset switch closed, the output is high only if the film switch is open.

Both sets of conditions allow point E to drop below +12 v, so that the transistor is turned on.

Frank Neu, Electronic Engineer, Lawrence Radiation Laboratory, Berkeley, Calif.

Zener, Diode Bridge Form Double-Ended Clipper

A symmetrical double-anode Zener diode equivalent can be constructed very simply by using an ordinary Zener and a diode bridge circuit. The output voltage is equal to $\pm\ (V_z + 2V_f)$ where V_z is the Zener voltage and V_f is the forward voltage drop of the diodes. The output waveform is almost perfectly symmetrical since both positive- and negative-going voltages are clipped by the same Zener. If extreme symmetry is required, D_1 and D_2 and D_3 and D_4 can be matched diode pairs.

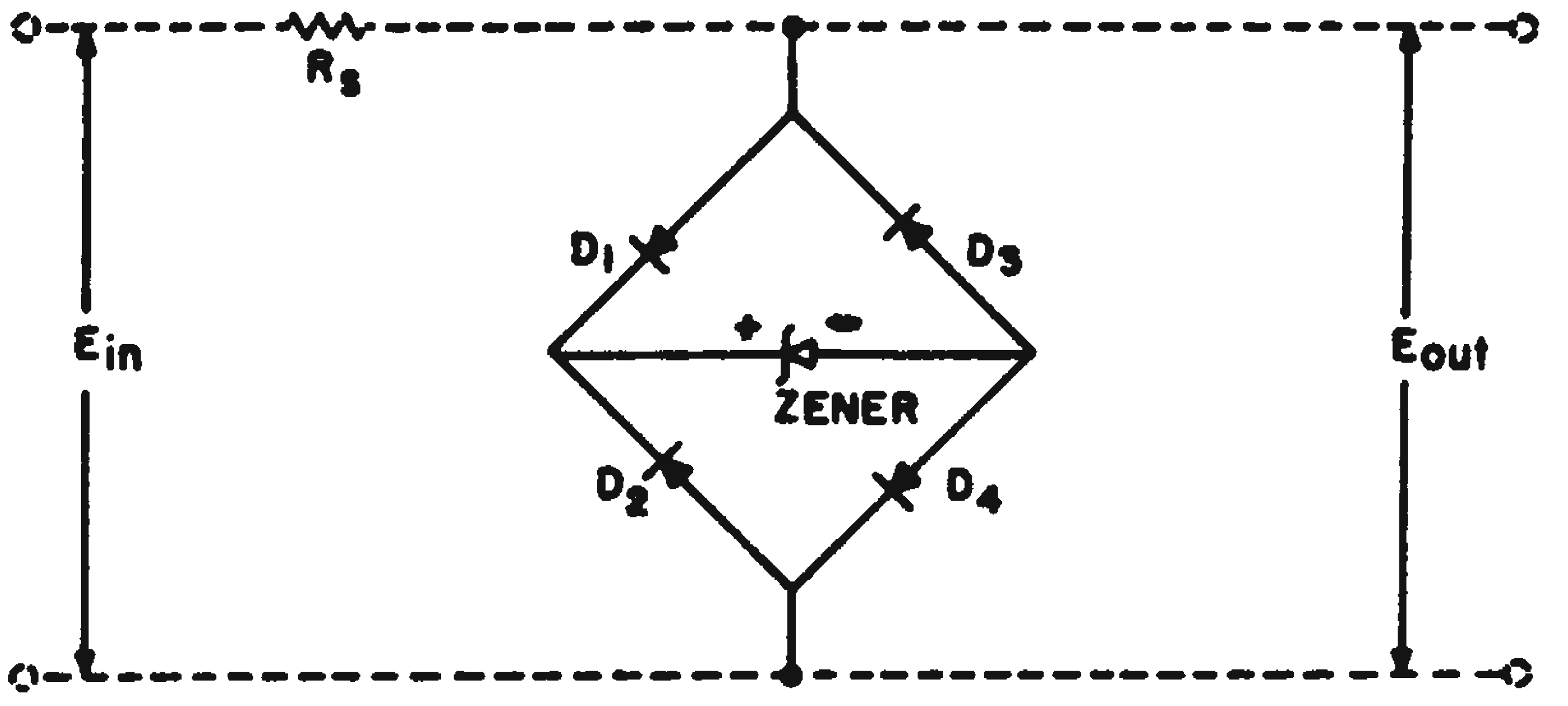

Equivalent of double-anode, Zener diode is formed by an ordinary Zener connected in a diode bridge circuit.

Donald A. Boelter, associate engineer, Martin-Marietta Corp., Baltimore, Md.

Circuit Squares DC Input Voltage

Here's a circuit we designed whose output is proportional to the dc input, squared. Its operation is based on the fact that the area of a right triangle is proportional to the product of its sides.

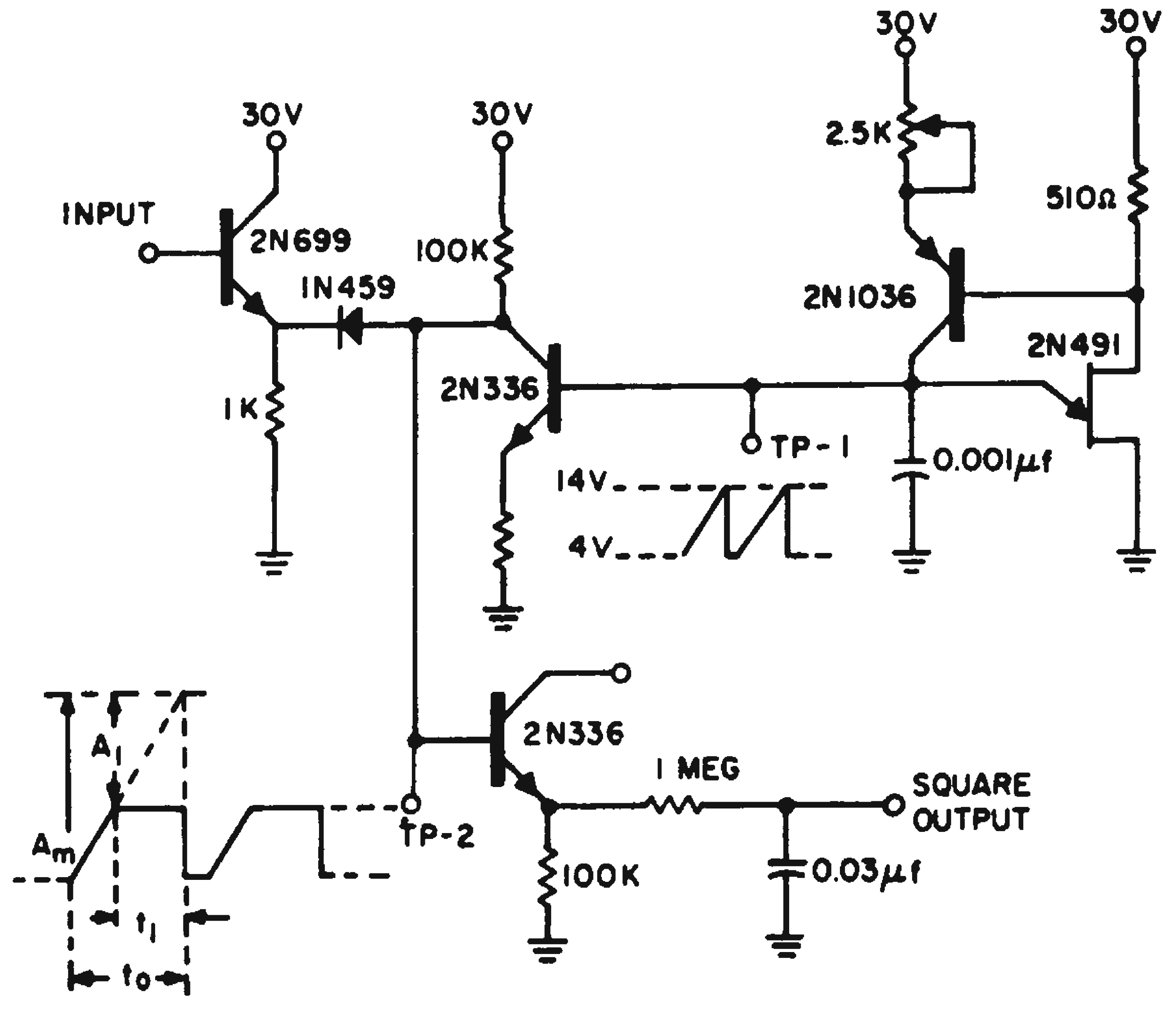

Output voltage of circuit is directly proportional to the dc input voltage squared.

With a direct voltage applied at the input, the wave-shapes at the emitter, point *1*, of the 2N491 unijunction and at the base, point *2*, of the 2N336. are as shown in the figure. The clipping level at point *2* set by the dc input, with the average value of the waveform given by:

$$E_{DC} = \frac{A_p}{2} - \frac{A_1 t_1}{2t_o} \qquad (1)$$

where

$$A_p = kt_o$$
$$A_1 = kt_1$$

$$E_{DC} = \frac{A_p}{2}\left[1 - \frac{t_1^2}{t_o^2}\right]$$

$$= \frac{A_p}{2} - \frac{A_p t_1^2}{2t_o^2} \qquad (2)$$

But $A_p/2$ is a dc offset level, and hence:

$$\Delta E_{DC} = \frac{-A_p t_1^2}{2t_o^2} = Kt_1^2$$

Since $t_1 = A_1/k$ and A_1 is the input level, the output is proportional to the input squared, within the range of $0 < t < t_o$.

Robert L. Colcord, Radar Engineer, Magnavox, Fort Wayne, Ind.

Cascode Circuit Compensates For Heater-Voltage Sensitivity

The effect of shifting heater voltages in dc vacuum-tube circuits can be compensated for by utilizing the very heater sensitivity which is itself undesirable.

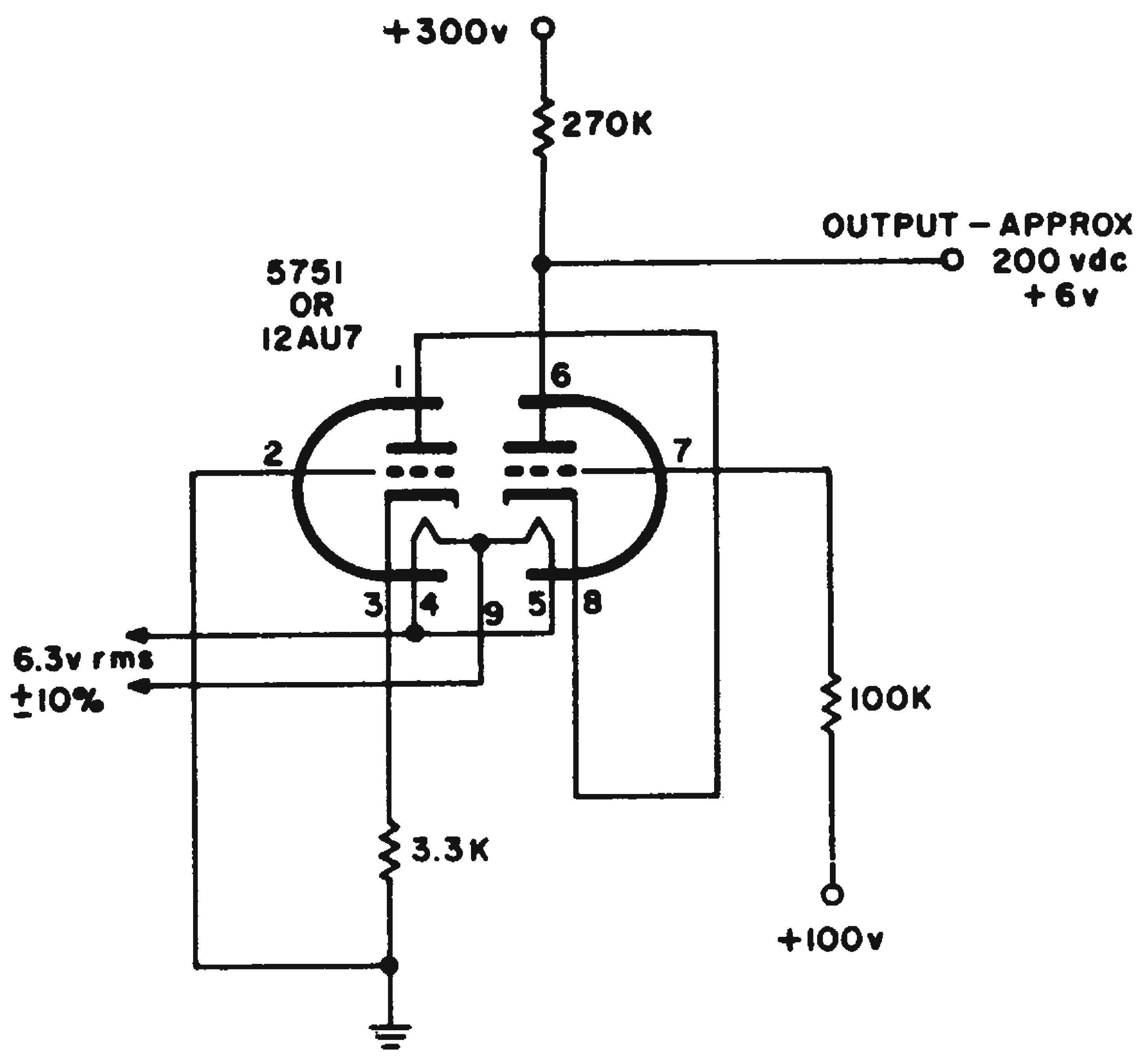

Output of triode cascode circuit, varying linearly with heater voltage, is used to compensate for heater variations in dc vacuum-tube circuits.

A triode cascode circuit will change its output in response to changes in heater voltage. This output voltage can then be applied to an appropriate point in the circuit to be compensated. Thus, the circuit's response to heater voltage variations can be cancelled out.

The circuit shown is part of the compensation circuit used to stabilize the drift of an integrator circuit. With the components given, the output of the cascode circuit is linear and inverse with heater voltage. Its output changes by approximately 1 v for each 0.1-v change of heater voltage over the range of 6.3 rms ±10 per cent.

In the complete circuit, there may be some need of impedance matching or dc level changing to accomplish the desired result. Also, a sensitivity control could be added so that overcompensation would not occur.

Peter A. Ralatos, Electronic Engineer, Motorola Systems Research Laboratory, Riverside, Calif.

Simple Transistor Circuits Generate Phantastron Sweeps

Negative- or positive-going ramp voltage waveforms, similar to the output of a phantastron, can be generated by relatively simple transistor circuits.

In the circuit shown, an npn transistor is used in a simple common emitter connection to generate a ramp. The transistor is normally saturated by the current through R_b. Applying a negative pulse to the cathode of diode *D* cuts the transistor off and allows its collector to rise to the B+ supply. When the period, t_1, of this pulse is over, the transistor will tend to saturate through R_b. However, the negative waveform coupled from the collector through *C* tends to cut *Q* off. The net result is a negative ramp voltage of good linearity. The slope is determined

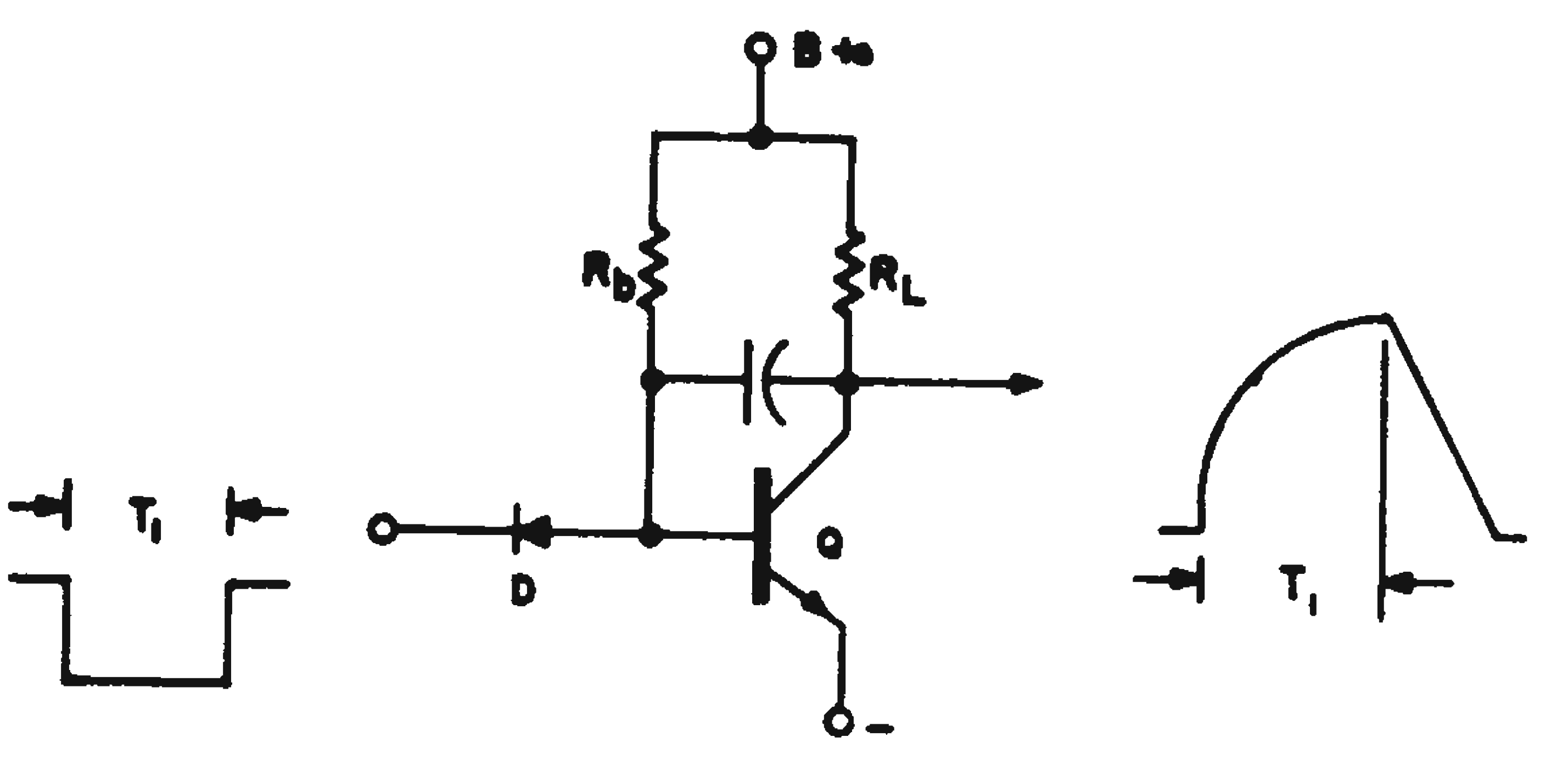

Ramp output voltage is generated by this single transistor circuit.

primarily by the value of C, R_b, and the dc current gain of the transistor.

Similar ramp waveforms of opposite polarity can be generated by using a pnp transistor and making the necessary circuit changes.

The above technique was found extremely useful in designing economical driving and zero-set circuits for the Beam-X switch.

Arpad Somlyody, Circuit Design Analyst, Electronic Components Div., Burroughs Corp., Plainfield, N. J.

Biased-On AC Amplifier Boosts Low-Level Pulses

Amplifying small signal unipolar pulses with transistors is difficult, particularly if the voltage swing is less than 0.2 v. At such low voltages, the normally biased-off, pulse amplifier may not be used. Rather, a biased-on ac amplifier is required.

In the usual ac amplifier, Fig. 1a, the resistors R_1, R_2, R_e, and R_L, are chosen to yield the desired gain, operating point, and stability. The signal is usually introduced through a capacitor or a resistor. If a resistor is used, an appreciable amount of signal attenuation can occur because R_2 must be made small for reasons of temperature stability. If a capacitor is chosen, the amplifier becomes sensitive to pulse duration as well as to input rise time.

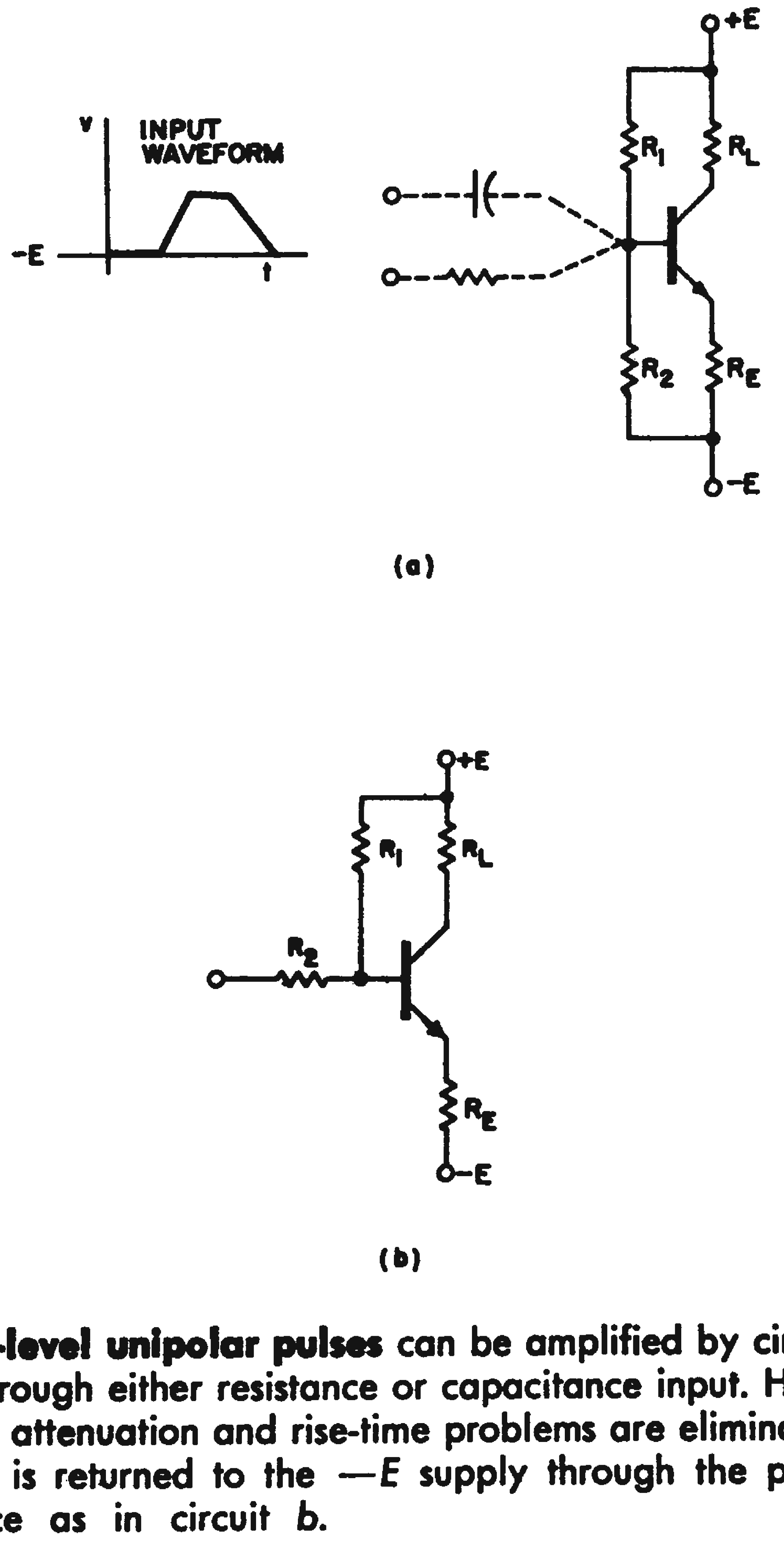

Low-level unipolar pulses can be amplified by circuit *a*, through either resistance or capacitance input. However, attenuation and rise-time problems are eliminated if R_2 is returned to the $-E$ supply through the pulse source as in circuit *b*.

Both of these difficulties can be overcome if the circuit of Fig. 1b is used instead. Again R_1, R_2, R_e and R_L, are chosen consistent with good design procedure, as if R_2 were to be returned directly to the $-E$ supply. However, it is returned to the $-E$ supply through the pulse source. This yields the following advantages:

1. There is practically no signal attenuation because R_1 is normally much greater than R_2.
2. Circuit response is extended to dc because no capacitors are used.
3. The amplifier has a high input impedance (essentially $R_2 + \beta R_e$).
4. The circuit requires no more parts than the other configuration.

The design of Fig. 1b assumes a reasonably low source impedance (necessary in any case). It finds application in circuits such as those which amplify the output of differential voltage amplifiers (pickoffs) where a great deal of sensitivity is required.

Joseph Albert Pecar, Design Engineer, Department of Defense, Washington, D. C.

TD, Current-Mode Switch Deliver Fast 1-w Pulse

We needed a fast-rising pulse generator, to work into a 75-ohm coaxial cable. After unsuccessful results with conventional circuits, the circuit shown finally did the job. Rise and fall times are less than 10 nsec. Inductance L gives a 10 nsec pulse length for each microhenry of inductance. Duty cycle can be varied from about 50 to 10 per cent with potentiometer P_1. P_2 sets the correct bias for the current-mode switch.

The transistors are four silicon epitaxial mesa transistors (Motorola 2N834), two each in parallel. The tunnel diode is a gallium arsenide unit with a peak current of 10 ma (Texas Instrument XA 650). The value of the negative supply is uncritical, provided R is chosen to deliver 120 ma to the emitters.

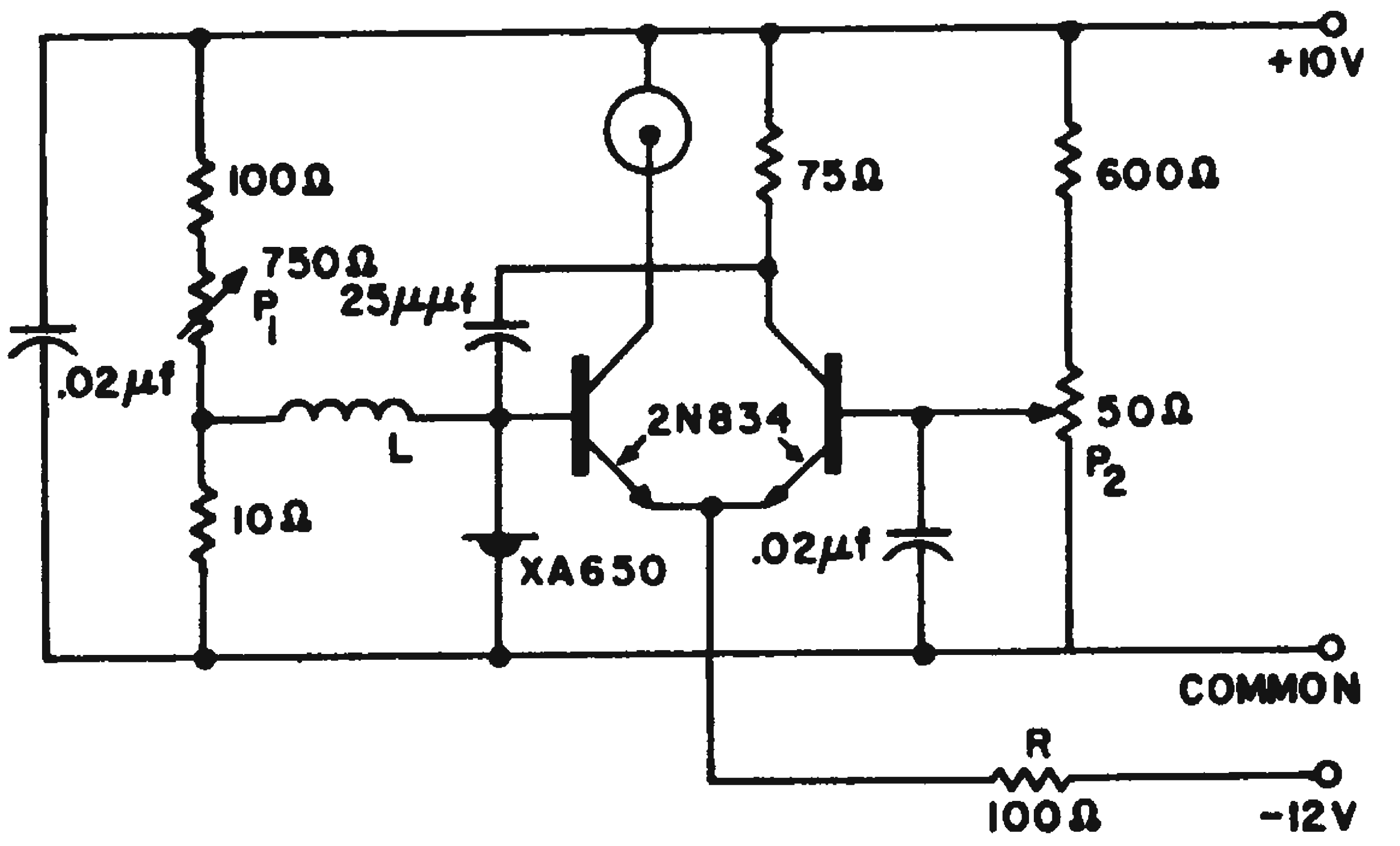

Tunnel diode is key to fast-rising pulse generator feeding a 75-ohm coaxial load.

Peter Laakmann, Project Engineer, American District Telegraph Co., New York, N.Y.

Photoelectric Elements Help Analog Circuits Divide, Multiply

Performing multiplication, division, or other "nonlinear" operations on the basic analog computer circuit, Fig. 1a, requires extra circuit complexity and expense. However, if the circuit is built around photoelectric elements, as shown in Fig. 1b, these operations can be much more readily performed.

In this figure, R_{p1} and R_{p2} are photoelectric elements of identical, or at least similar, characteristics. They are both illuminated by a single light source whose output varies with the voltage across it. Thus:

$$e_k = -e_1 \frac{R_{p1}}{R_1}$$

or

$$R_{p1} = \frac{1}{e_1} \times e_k R_1 = \frac{1}{e_1} \text{ x } constant$$

But, since R_{p2} is illuminated by the same light source as R_{p1},

$$R_{p2} = R_{p1} = \frac{1}{e_1} \text{ x } constant$$

Because R_{p2} and R_{p1} are electrically in-

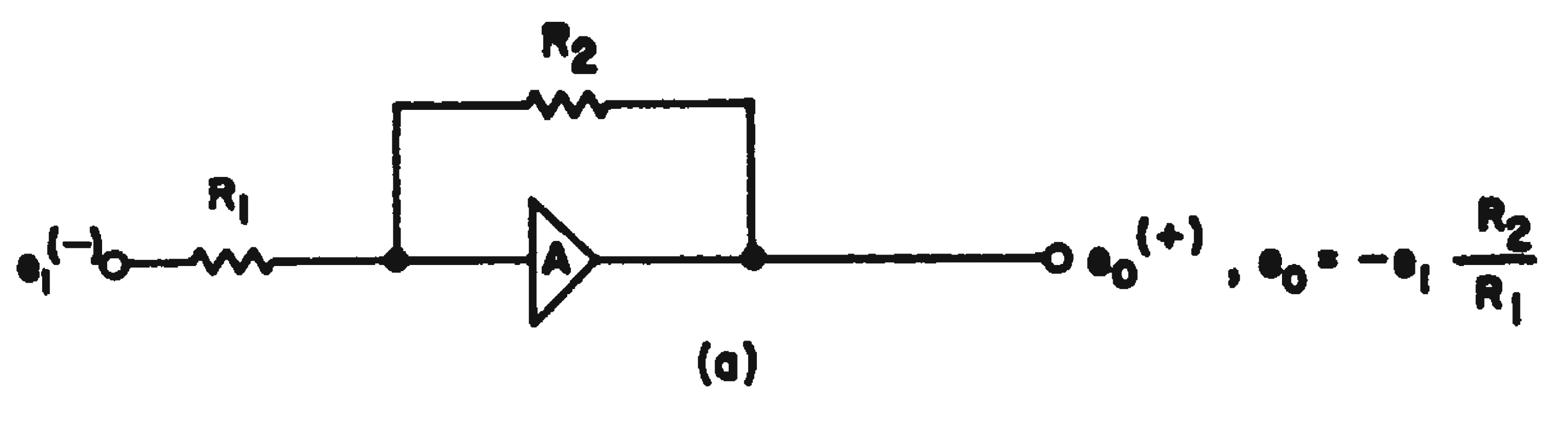

(a)

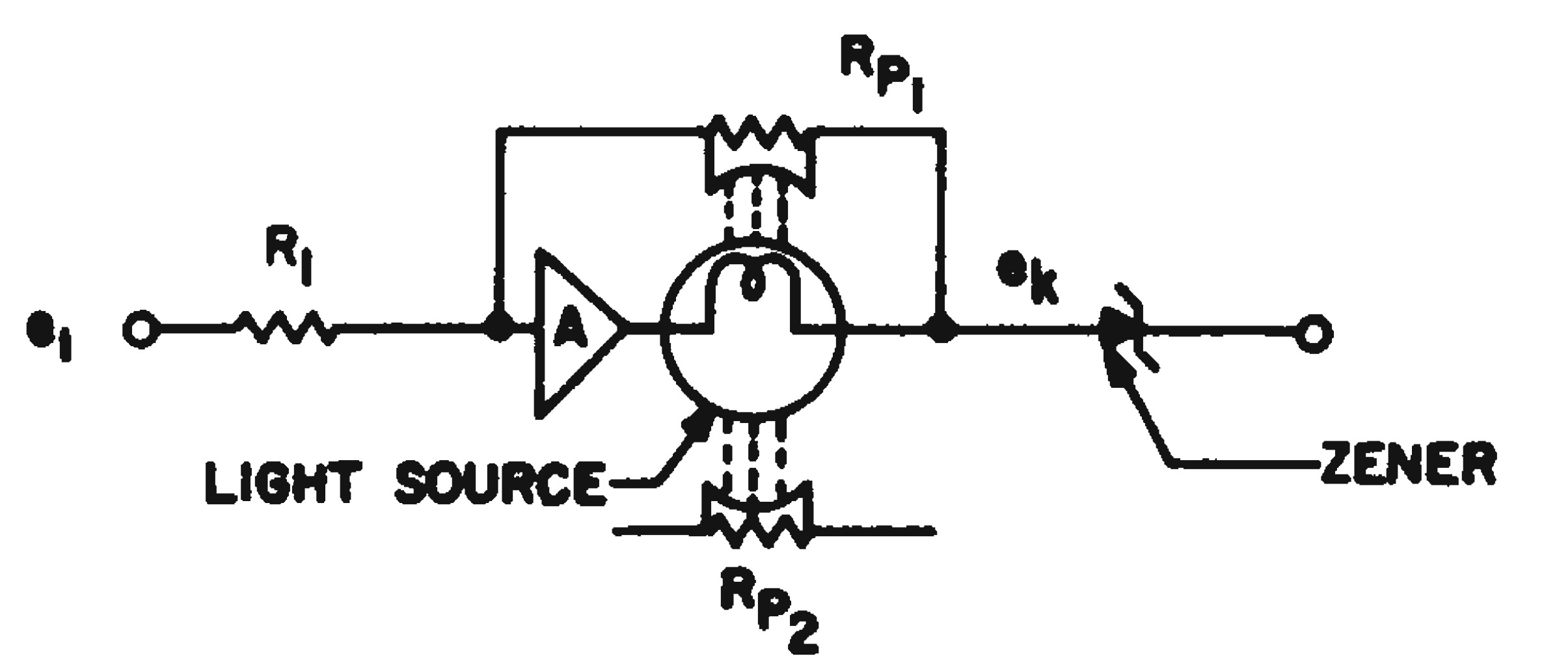

(b)

Fig. 1a. Basic analog computer circuit can perform operations such as addition, subtraction, integration with only minor circuit variations. Multiplication, division, other "nonlinear" operations require more complicated circuitry. **(b)**. Basic photoelectric analog circuit can be readily modified to divide, multiply, perform nonlinearly.

MULTIPLICATION

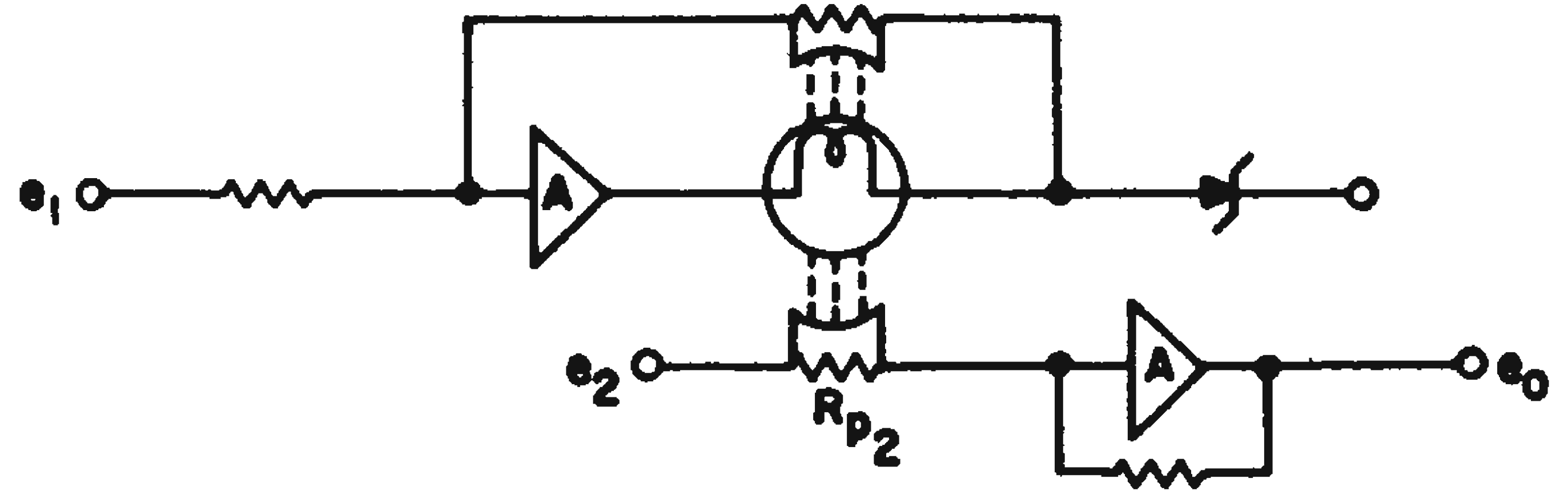

$$e_0 = -e_2 \frac{R_3}{R_{p2}} = e_2 e_1 \text{ x CONSTANT}$$

DIVISION

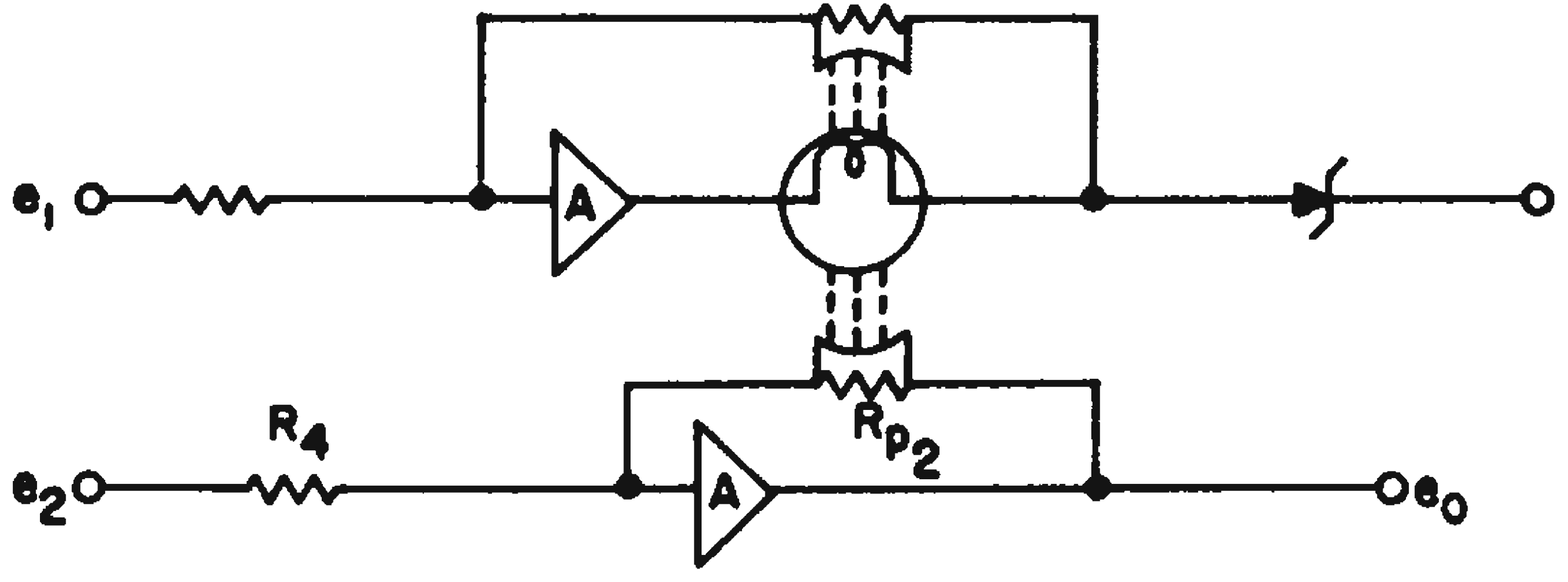

$$e_0 = -e_2 \frac{R_{p2}}{R_4} = \frac{e_2}{e_1} \text{ x CONSTANT}$$

SQUARE ROOT

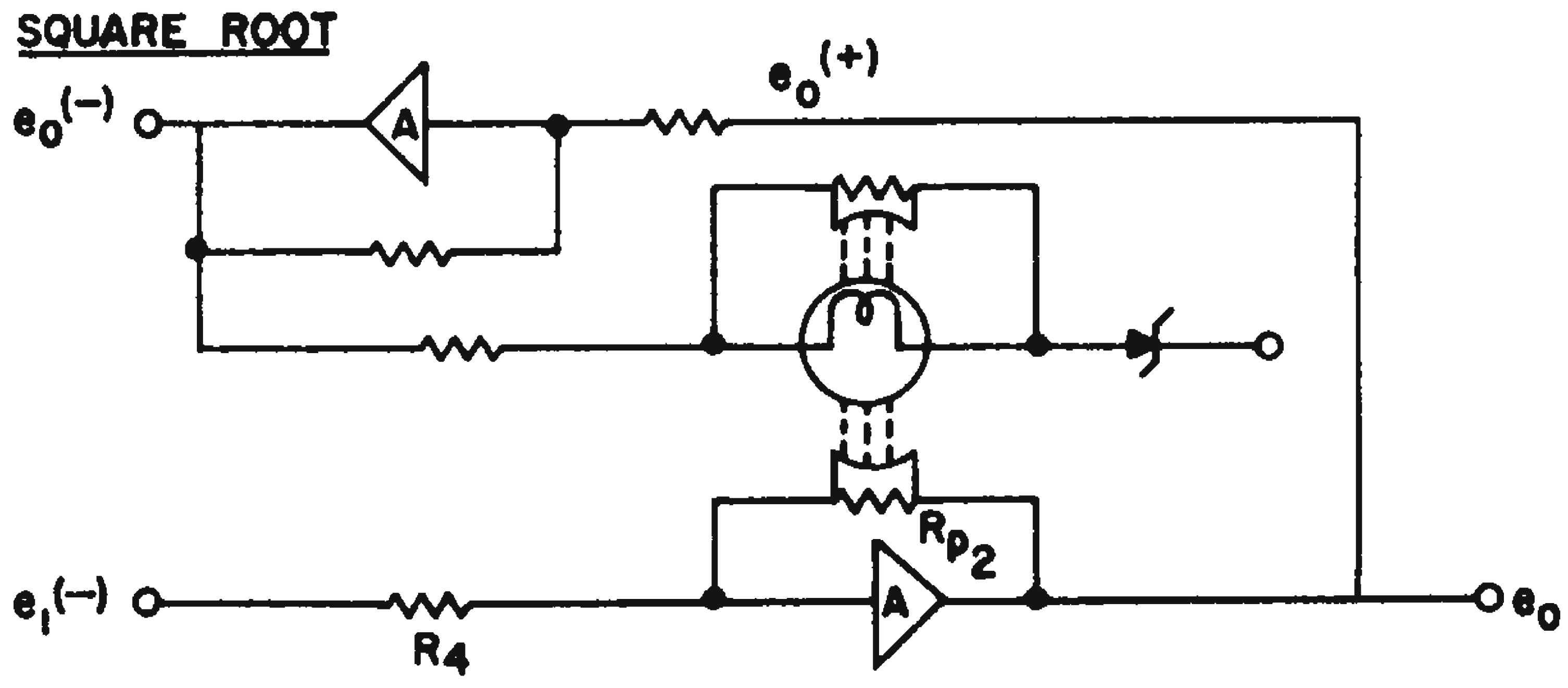

$$e_0 = -\frac{R_{p2}}{R_4} = \frac{e_1}{e_0} \text{ x CONSTANT}$$

$$\therefore e_0^2 = e_1 \text{ x CONSTANT}$$

$$\text{or } e_0 = \sqrt{e_1} \text{ x CONSTANT}$$

dependent, this operating equation may be applied as shown in the functional circuits.

Note that the feed back circuit does not rely on the relationship between current and intensity of the light source, or between intensity and resistance of the photoelectric elements.

John D. Howell, Development Engineer, Wallace & Tiernan, Inc., Belleville, N. J.

Extra Triode Unloads Analog Computer Signal Source

Unloading of high-impedance signal sources (precision potentiometers, capacitors, etc.) in analog computers is commonly done with the configuration of Fig. 1. Here, the regenerating resistor $R = (R_2R_4/R_3) - R_1$, and both amplifiers are high-gain inverters. In systems where dc levels must be accurately preserved, both amplifiers must be chopper-stabilized, since drift-stabilization of a single non-inverting amplifier is impractical.

However, the unloading can be simplified by using the circuit of Fig. 2 which requires only a single drift-stabilized amplifier, and an additional triode. Dc offset voltage $+V$ places the cathode of the triode at $-VR_2/R_1$. This permits the plate to operate at a quiescent potential of zero; the output stage has the benefit of full current feedback and chopper stabilization. For proper unloading:

$$R = R_2 \frac{R_L R_0}{(R_L + R_0)R_K} - R_1$$

To free the output and input from contributions by E_{bb}, E_{bk} and V, the following relation should hold:

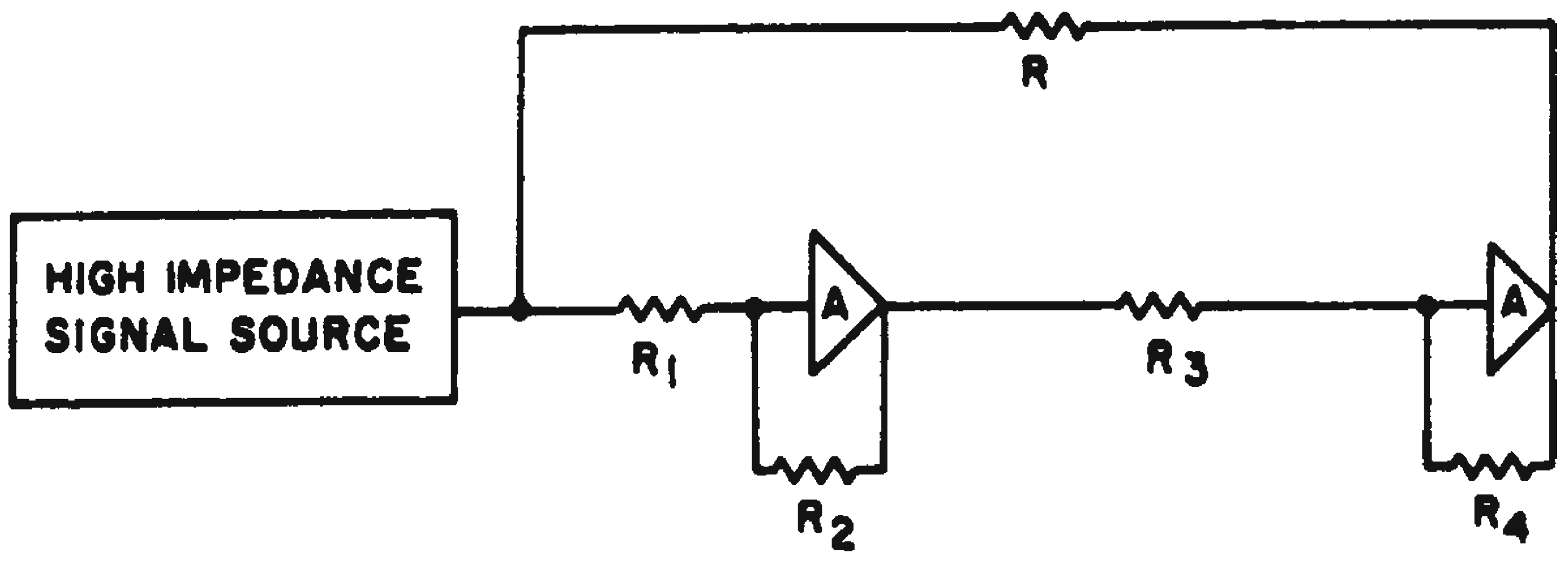

Fig. 1. Conventional unloading amplifier configuration requires both amplifiers to be chopper-stabilized if dc levels are to be preserved.

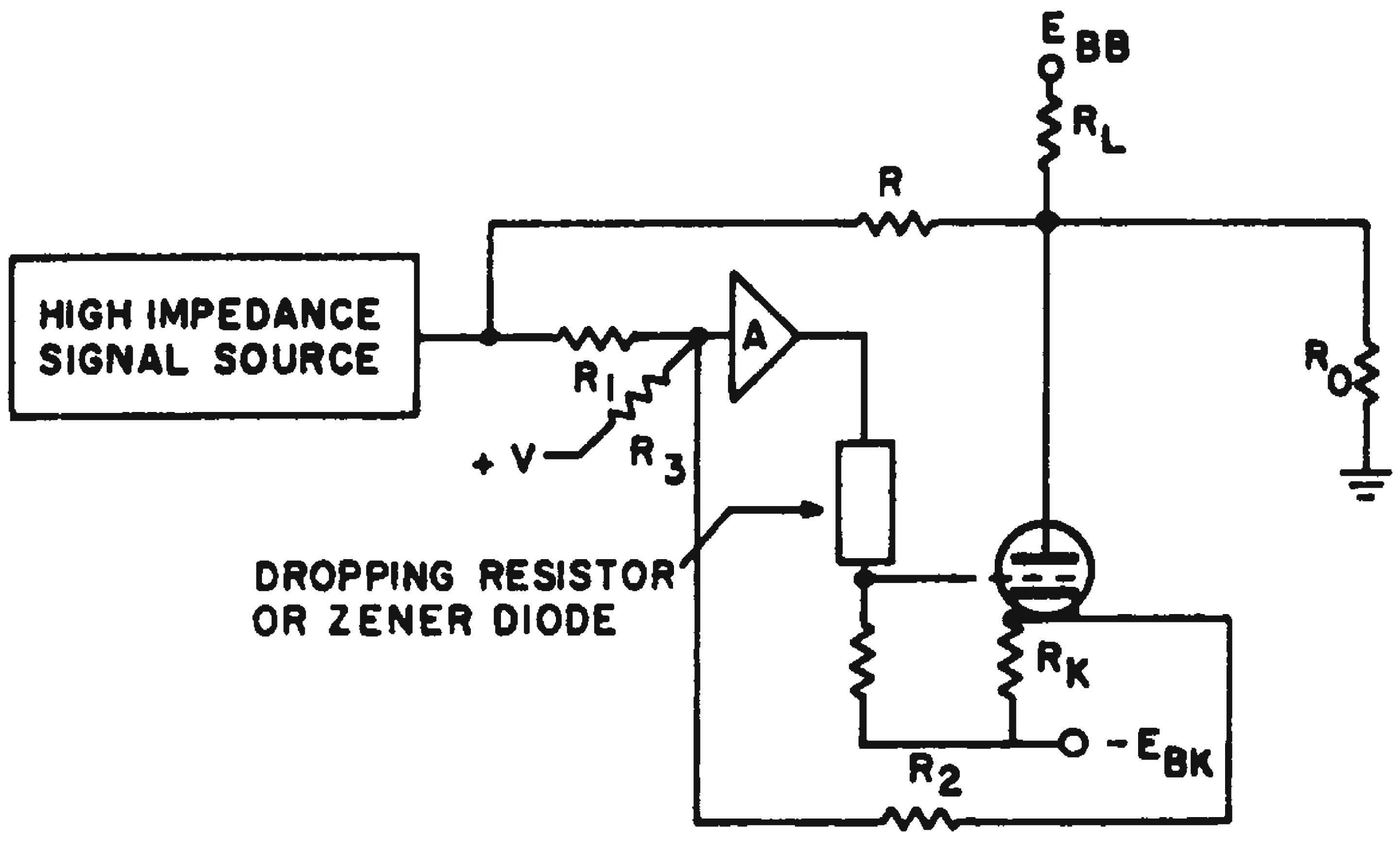

Fig. 2. Modified unloading amplifier configuration uses extra triode but requires only a single drift-stabilized amplifier.

$$E_{bb} = \frac{R_L}{R_K}\left[E_{bk} - \frac{V}{R_3}(R_2 + R_k)\right]$$

If $E_{bb} = E_{bk} = E$, then

$$\frac{E}{V} = \frac{R_L(R_2 + R_k)}{R_3(R_L - R_k)}$$

Note that the output cathode is not a low-impedance point, since current drawn from it will affect stage gain. Resistance loading must therefore be considered in the design.

George M. Strauss, Engineer, Maxson Electronics Corp., New York, N. Y.

Exclusive OR Circuit Uses Three Transistors

Logical design of an N variable exclusive OR function (output when there exists only one input) would usually require one OR gate, three AND gates, and an inverter for three inputs. The Boolean expression is: $(A+B+C) = \overline{(AB+AC+BC)}$. As the circuit inputs increase, the number of logical gates also increase.

The three-transistor, N-input exclusive OR circuit shown in the diagram costs only \$7 to construct. With no inputs Q_1 and Q_3 are saturated, and Q_2 is cut off. One input is not sufficient to cut off Q_1 but is sufficient to cut off Q_3. Therefore, with one input, and AND gate output is false. With appropriate choice of the input resistance, any number of inputs may be used without changing the circuit design. A worst-case analysis was performed for the circuit design.

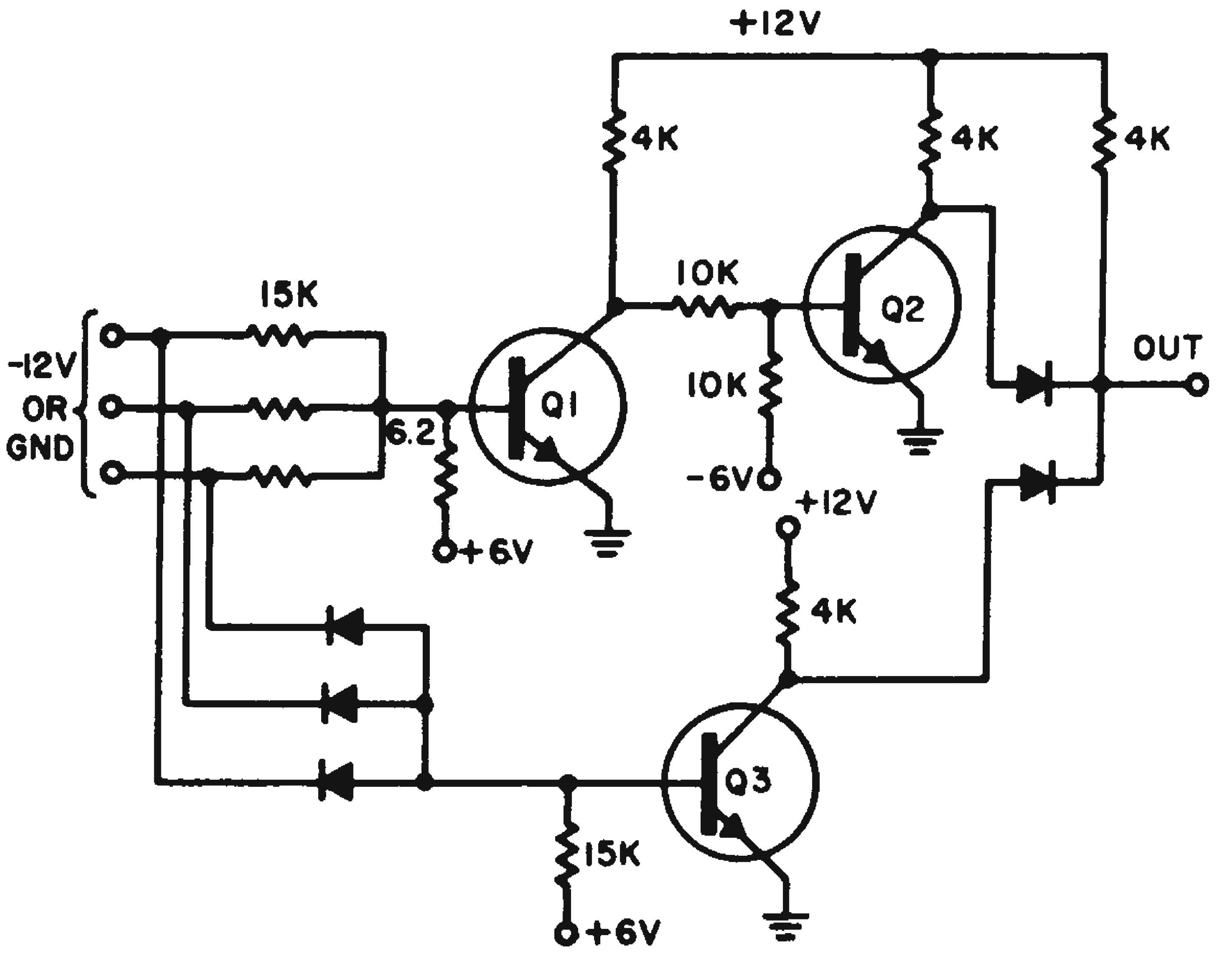

Logical output when only one of N inputs is present can be obtained with three-transistor circuit.

J. L. Krasner, McDonnell Aircraft Corp., St. Louis, Mo.

Differential 'Exclusive OR' Reduces Logic Modules

This "Exclusive OR" circuit is essentially a difference amplifier. The output is in the 0 state when both inputs, *A* and *B*, are identical, but in the 1 state when the inputs are different.

The first condition is satisfied when both transistors are cut off and the output at the common collectors remains at V_1. When $A = 1$ and $B = 0$, TR_2 is reverse-biased and TR_1 is bottomed, drawing base current through R_2, the output is then at zero potential—that is, in the 1 state. Similarly when $A = 0$ and $B = 1$, TR_2 is bottomed and TR_1 cut off and the output is also at zero potential.

The circuit can also be extended to an n-bit Exclusive OR by employing *n* transistors with the appropriate interconnections.

To emphasize the economical advantages of this circuit the Exclusive OR is shown using conventional logic—AND, OR NOT—and to give an example using the Exclusive OR, or full adder is shown.

B. N. Parker, electronic engineer, Crosfield Electronics Ltd., London N.W. 5, England.

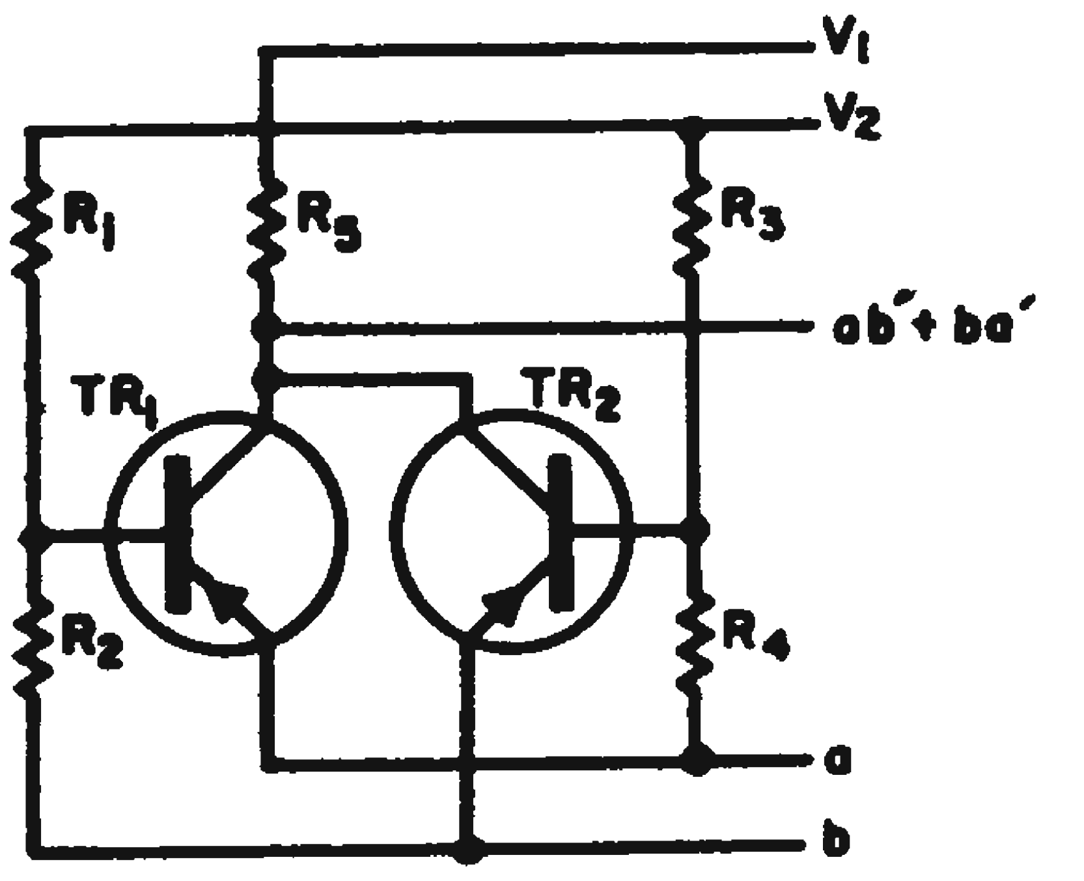

"EXCLUSIVE OR" CIRCUIT'

a	b	ab'+ba'
0	0	0
1	0	1
0	1	1
1	1	0

"EXCLUSIVE OR" TRUTH CHART

Fig. 1. Exclusive OR and its truth chart. Compared with the usual combination of two NOT gates, two AND gates and an OR gate (Fig. 2), the new circuit represents a considerable simplification.

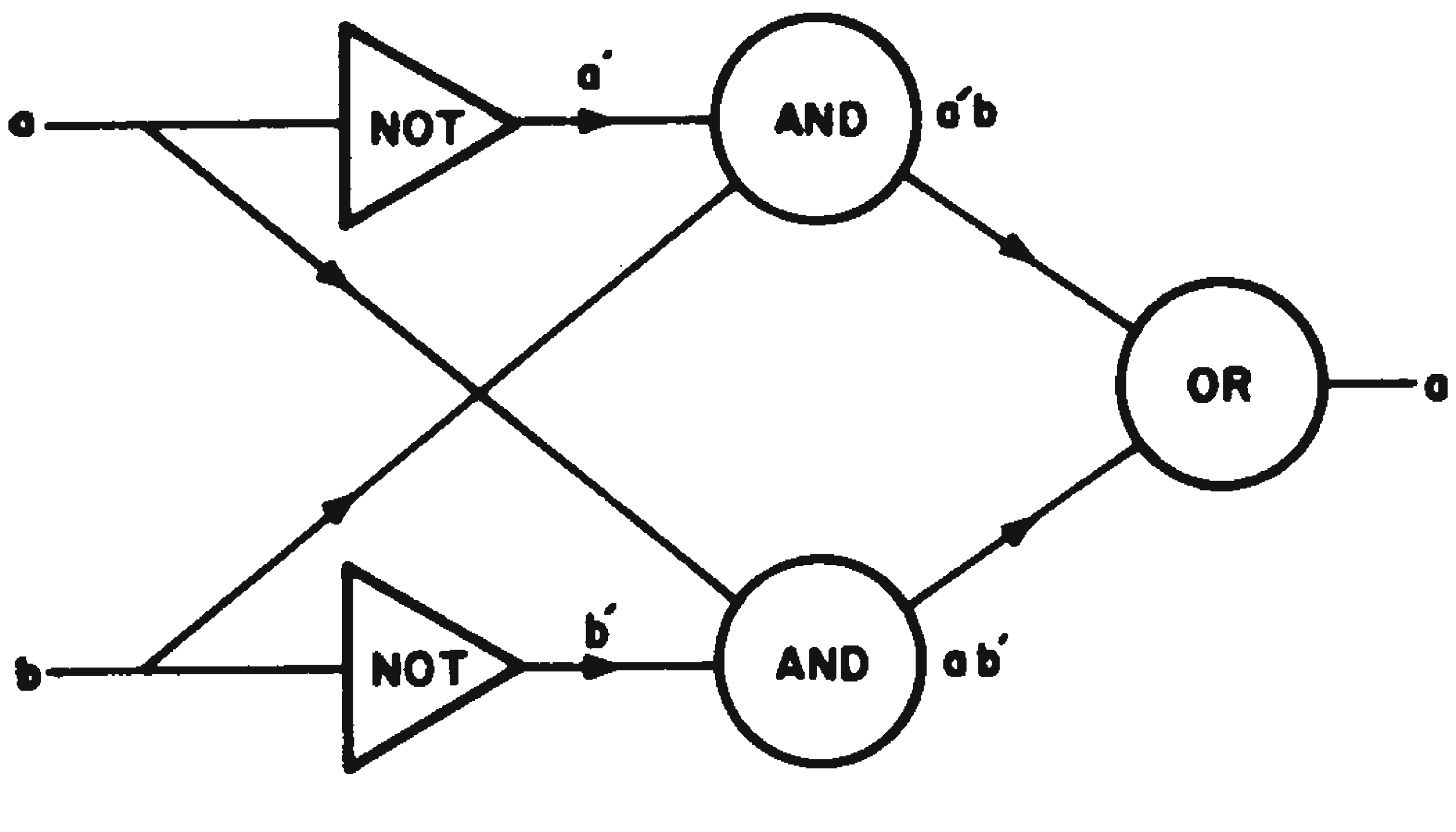

CONVENTIONAL "EXCLUSIVE OR" BLOCK DIAGRAM

Fig. 2. Conventional Exclusive OR is generated by five separate gates.

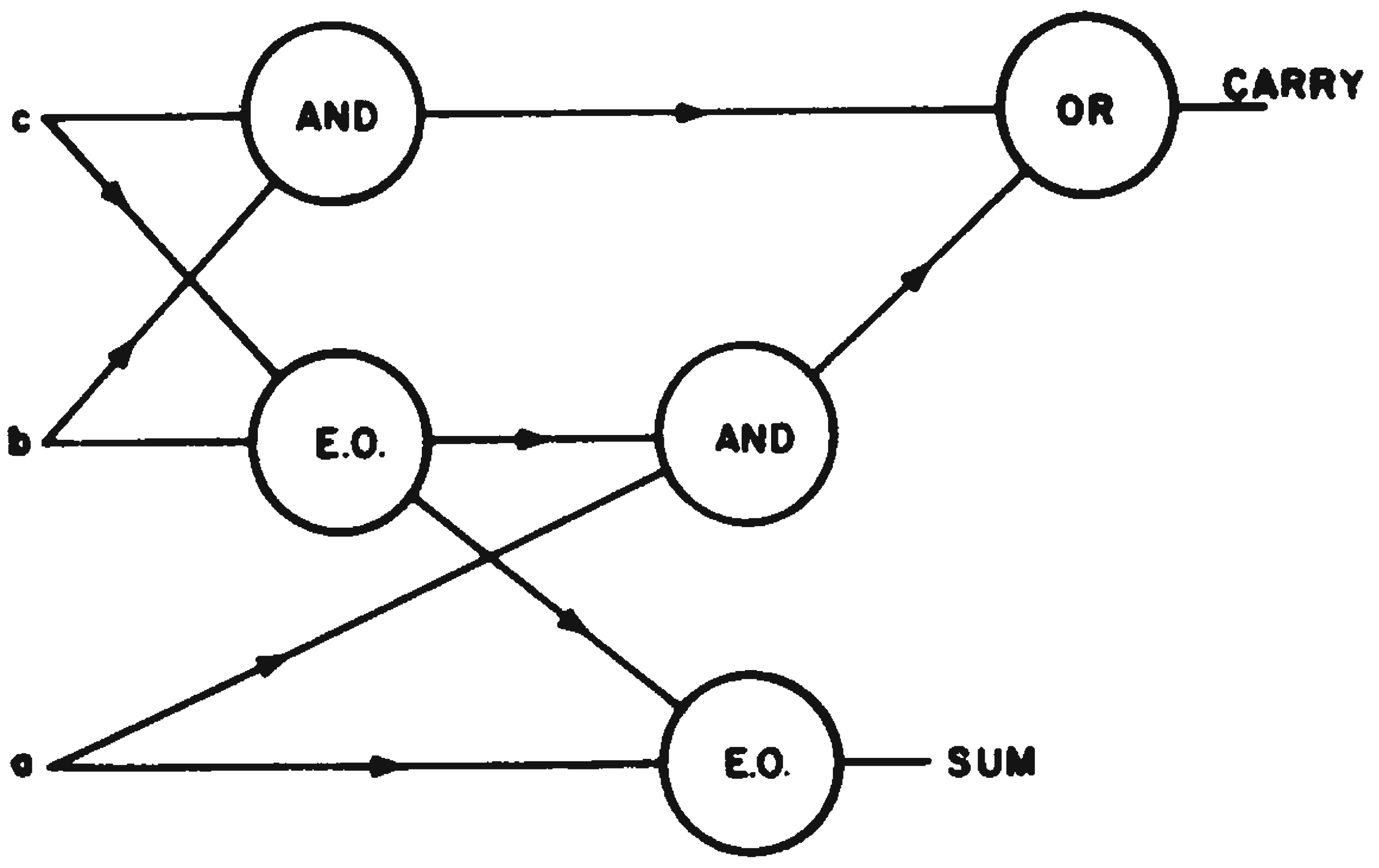

FULL ADDER USING (E.O.)"EXCLUSIVE OR"

Fig. 3. Full adder using Exclusive ORs can be constructed from five gates.

Majority-Logic Adder Cuts Component Needs

A full-adder can be designed with majority-logic using only two transistors to provide an inverted output. Two additional transistors are needed for inversion if the true outputs are also required. In more conventional full-adder designs, eight diode-gates and one transistor-inverter are needed to generate the true outputs.

The majority-logic configuration also provides amplification not obtained with diode-gates. With NOR-gates, at least eight transistors are needed to provide the full-adder function. Thus the majority-logic gate configuration results in considerable savings in components.

A majority-gate will give a true output when the majority of the inputs are true. The circuit diagram shows two majority-gates and two inverters. Let E_1 be equivalent to logical 1 (or the "true" signal) and zero volt be equivalent to logical zero.

The three-input majority gate comprised of transistors Q_1 and Q_2 is designed to saturate transistor Q_1 if the majority of the inputs (two or three) are 1s. This results in an output of zero for Q_1 which is inverted by Q_2 to make its output equal to 1. When the majority of the inputs are zero, Q_1 is cut off thus making the output of Q_1 equal to 1 and output of Q_2 equal to zero. As a consequence, the true output is at Q_2 and the inverted output is at Q_1.

A similar analysis holds for the five-input majority gate consisting of transistors Q_3 and Q_4. The circuit is designed to saturate Q_3 if three or more of the inputs are equal to 1. Transistor Q_4 inverts the signal to obtain the true output.

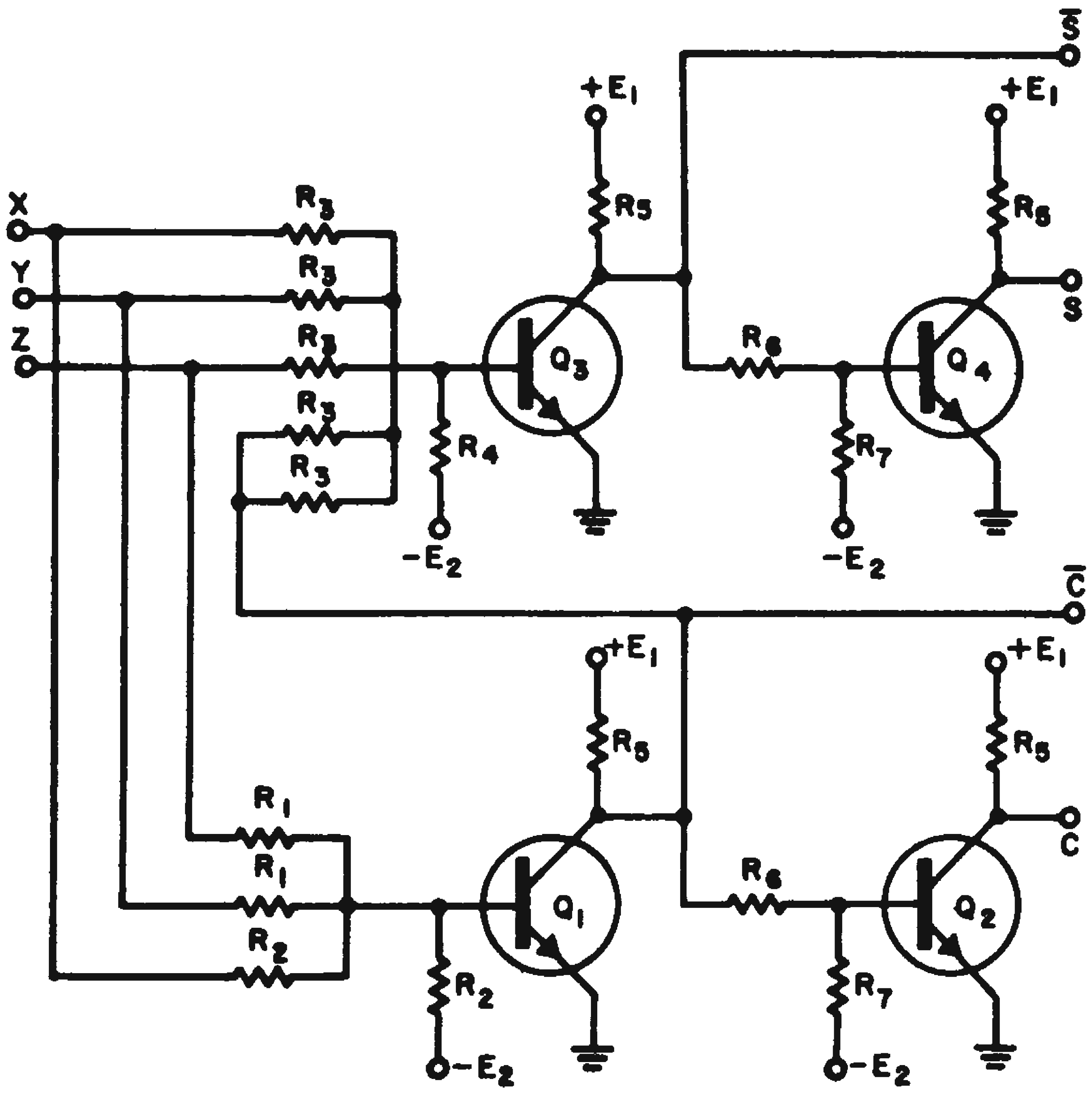

Full-adder using two majority-logic gates eliminates diode gates used in conventional circuits.

The logic of a full-adder is shown in the table. Columns x and y are the two bits to be added and z is the previous carry. S and C are the sum and carry outputs, respectively. From the table it can be seen that output C is a 1 when any two inputs are 1. Output S is a 1 if either one or all three inputs are 1.

x	y	z	C	S
0	0	0	0	0
0	0	1	0	1
0	1	0	0	1
0	1	1	1	0
1	0	0	0	1
1	0	1	1	0
1	1	0	1	0
1	1	1	1	1

The full-adder using two majority gates operates as follows: When any two inputs are 1, Q_1 saturates, making $\overline{C} = 0$ and $C = 1$. Q_3 has only two inputs equal to 1 causing it to be cut off and making $\overline{S} = 1$ and $S = 0$. When only one input is 1, Q_1 is cut off, making $\overline{C} = 1$ and $C = 0$. Q_3 now has three inputs equal to 1 (two from $\overline{C}$ and one from one of the inputs), making $S = 0$ and $S = 1$.

When all three inputs are 1, Q_1 saturates, making $\overline{C} = 0$ and $C = 1$. Q_3 has three inputs equal to 1, making $\overline{S} = 0$ and $S = 1$. Finally, when all inputs are 0, Q_1 is cut off making $\overline{C} = 1$ and $C = 0$. Q_2 has only two inputs equal to 1 (those from $\overline{C}$), making $\overline{S} = 1$ and $S = 0$.

M. Morris Mano, assistant professor of engineering, Los Angeles State College, Los Angeles, Calif.

Diode Sets Flip-Flops For Initial State at Turn-On

Flip-flops can be set to a specified state when power is switched on by the addition of the components R, C and D shown in the figure.

The action of the circuits is as follows: When power is switched on, capacitor C is uncharged and the diode D clamps the collector of Q_2 to ground potential. Thus Q_1 will be cut-off and Q_2 will be conducting. The time constant with which capacitor C is charged toward V_c should be large as compared to the time constant of the power transients and the flip-flop setting time.

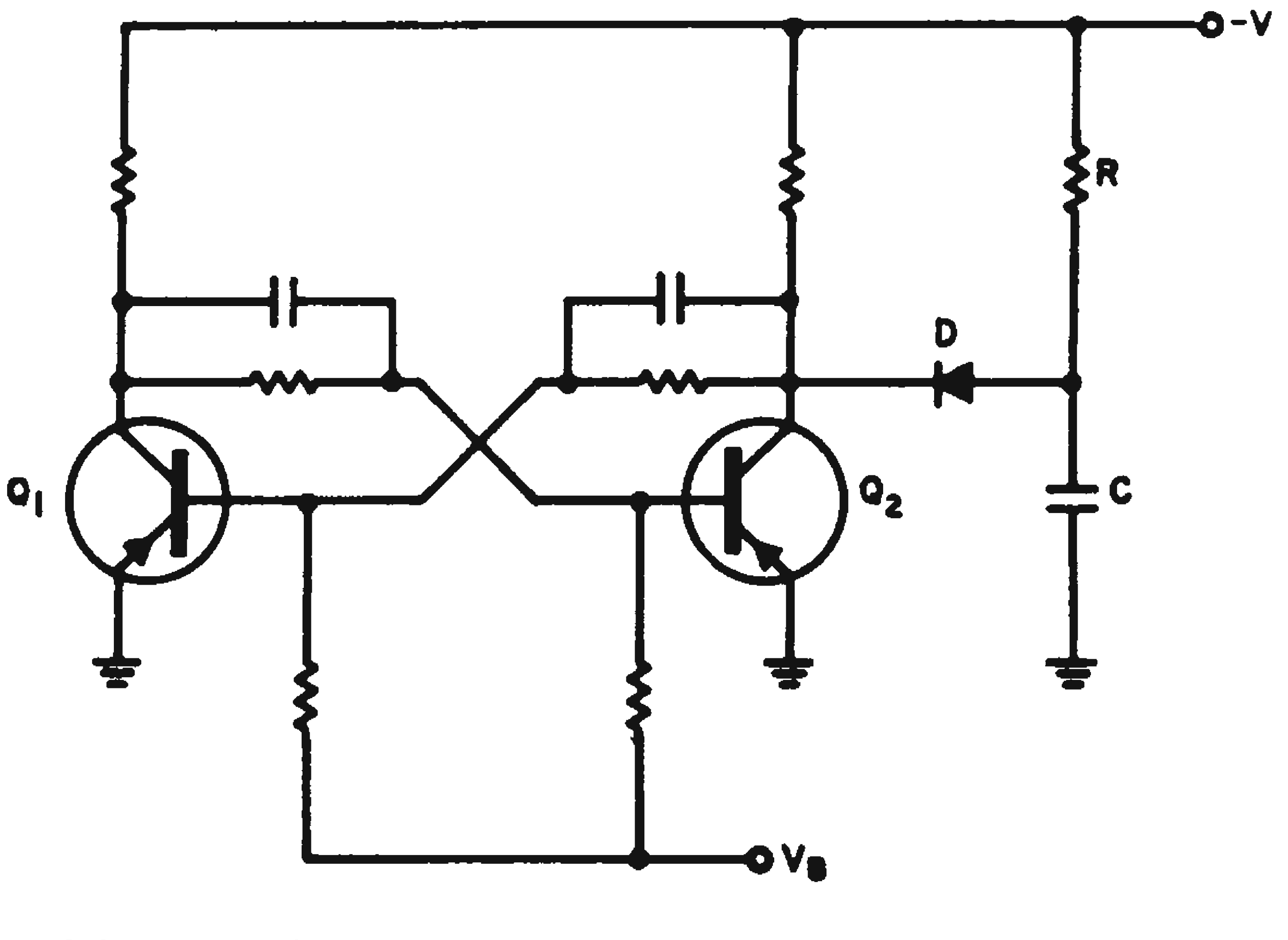

Addition of three components assures that flip-flops will assume desired state when power is applied.

After a few time-constant periods, capacitor C will be charged to $-V_c$ and the diode D will stay in the cut-off state, thus not interferring with the normal action of the flip-flop.

Zvi Netter, research engineer, Ministry of Defense, Tel-Aviv, Israel.

Direct-Coupled Transistors Provide Simple Parity Check

Parity can be checked by means of a direct-coupled transistor circuit without the need for other coupling components.

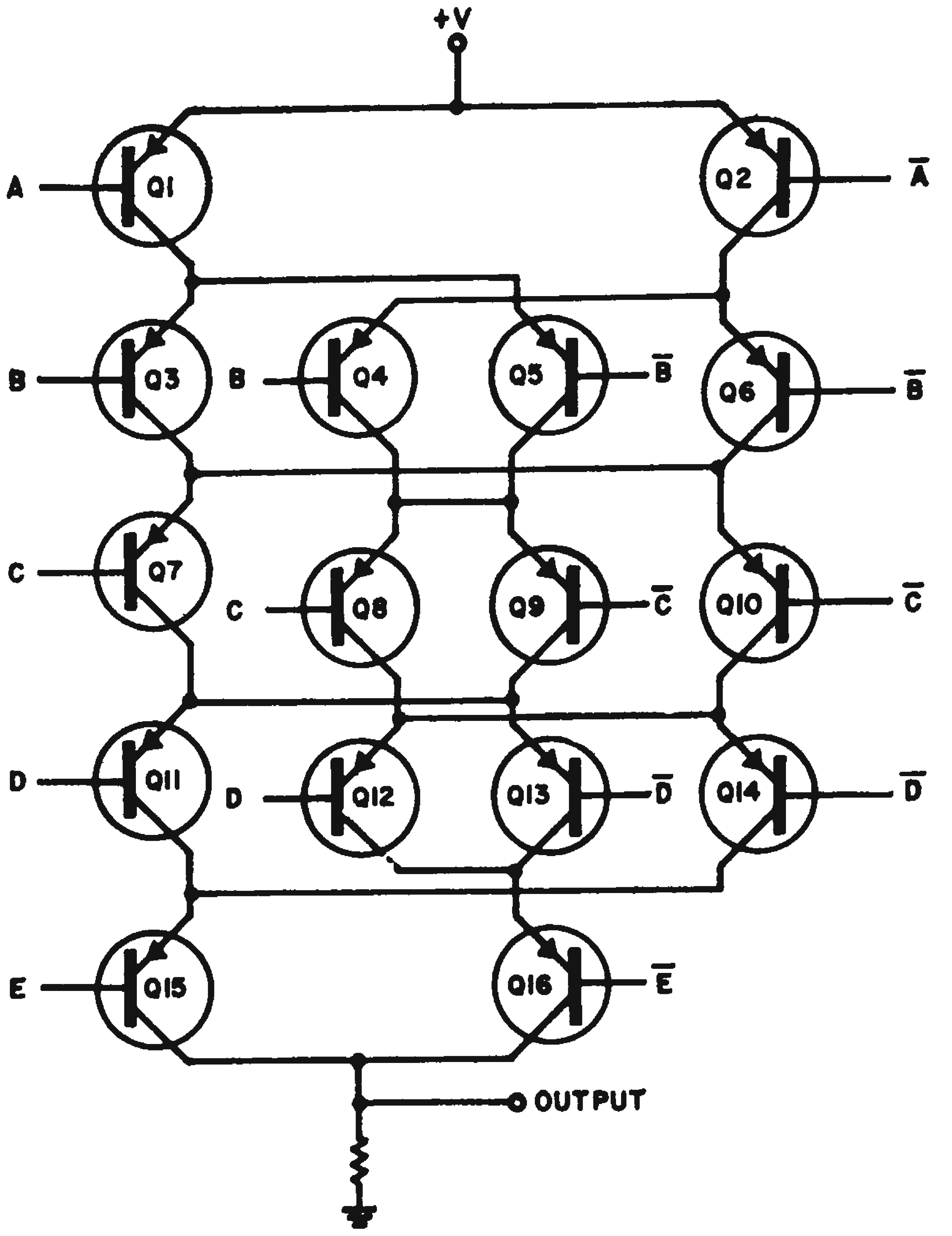

Direct-coupled parity-check circuit provides output for all odd combinations of inputs *A, B, C, D* and *E*.

For an input *A*, Q_1 is on and Q_2 is off. This provides a path to the emitters of Q_3 and Q_5. If the next input is $\overline{B}$, then Q_5 would be on and Q_3 would be off. This provides a path to the emitters of Q_8 and Q_9. This same reasoning would follow for inputs *C*, *D* and *E*, resulting in a +V output for all odd combinations of *A*, *B*, *C*, *D* and *E*.

This parity circuit can be extended to many inputs simply by adding four more transistors per input. The first and last rows will always require two transistors each.

J. McNellis, design engineer, Stromberg Time Corp., Thomaston, Conn.

Exclusive-OR Needs No Complement

The exclusive-OR function is frequently used in digital and communication equipment for parity generation, parity checking and arithmetic addition. This function of logical inputs *A* and *B* is defined as $A\overline{B} + \overline{A}B$, and is a logical one if *A* and *B* are different.

In many of the cases where the exclusive-OR function is desired, functions *A* and *B* are available, but their complements, $\overline{A}$ and $\overline{B}$, are not. The circuit shown in Fig. 1, generates the exclusive-OR function from only inputs *A* and *B*. The presence or generation of $\overline{A}$ and $\overline{B}$ is not needed. Unlike other simple circuits requiring only *A* and *B*, this circuit can be cascaded indefinitely because the output level is completely restandardized, and the circuit has a logical gain greater than one.

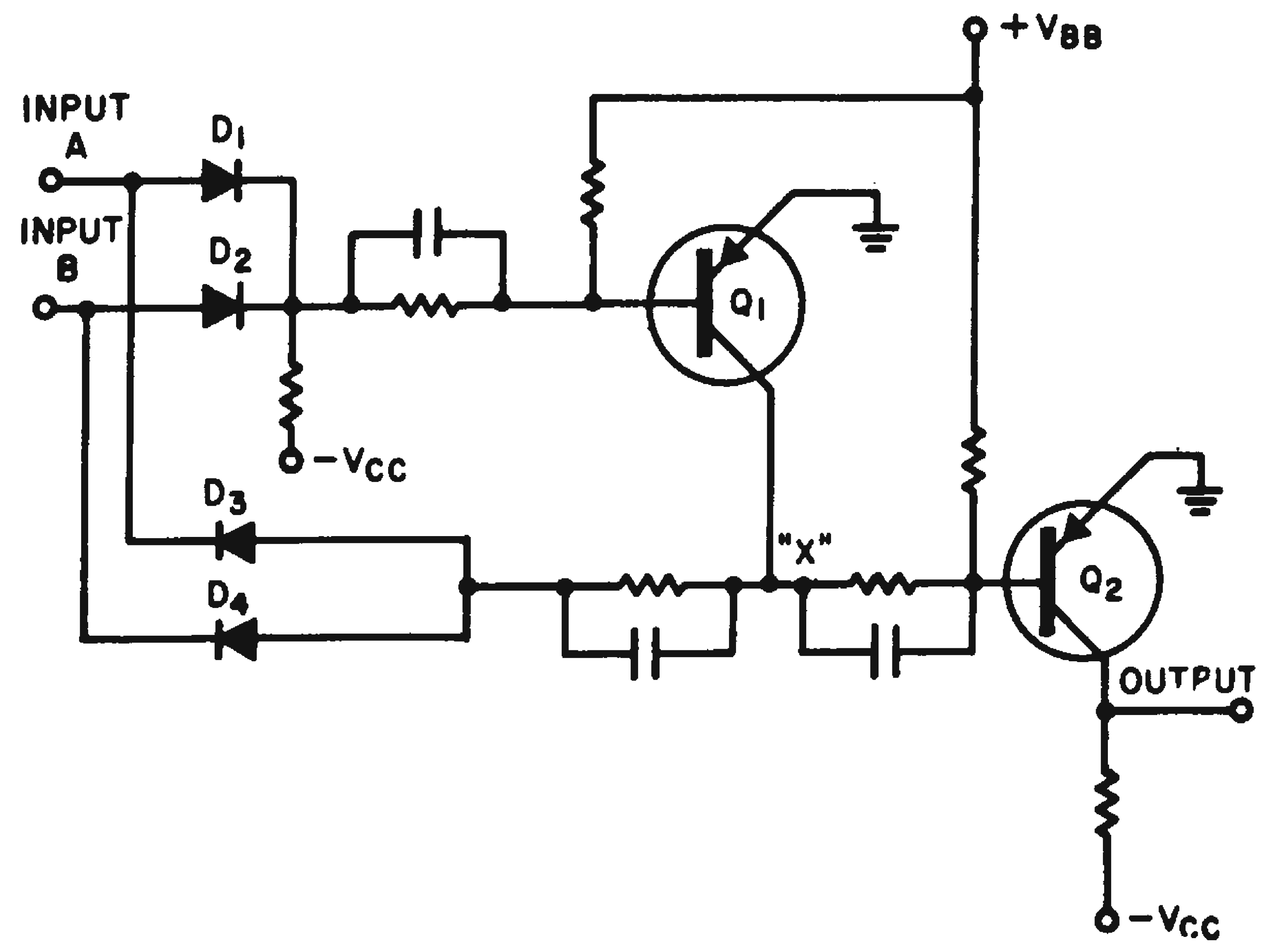

Fig. 1. Exclusive-OR circuit does not require complements of the inputs to generate function.

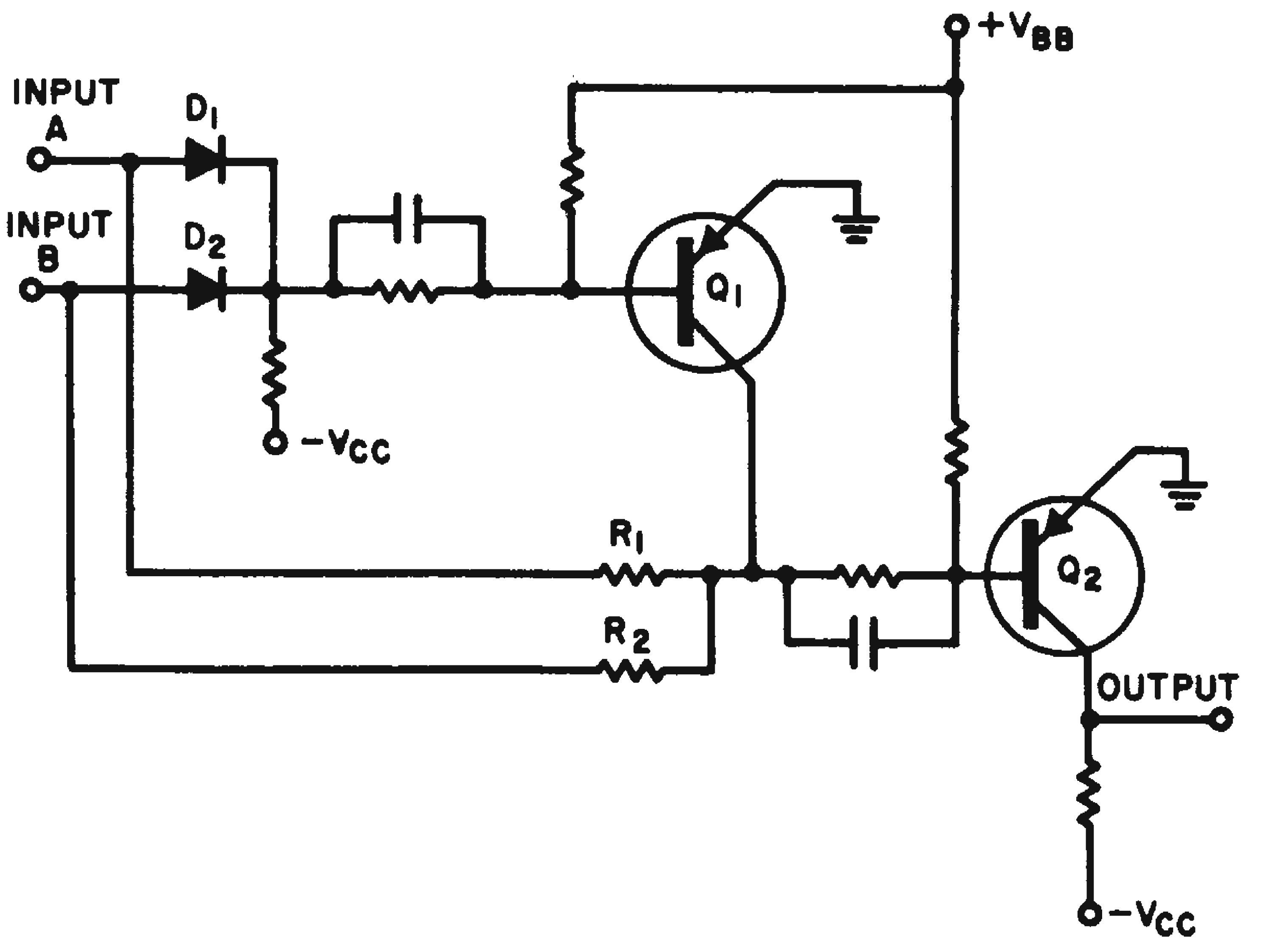

Fig. 2. Simplified version of circuit uses resistor logic version of diode gate.

Transistor Q_2 is on only if one input is negative and the other is at ground. If both inputs are at ground, Q_2 receives no turn-on signal. If both inputs are negative, Q_1 is on, placing point X at ground, and biasing Q_2 off.

Fig. 2 shows a resistor-logic version of the diode gate D_3-D_4 which can be used if speed and gain restrictions are not severe.

Nathan O. Sokal, manager digital techniques department, Sylvania Electronic Systems, Needham Heights, Mass.

Mousetrap Generator Builds a Better Pulse

It is sometimes difficult to obtain single high-voltage dc pulse of short duration. Conventional low-priced high-voltage relays were inadequate because of arcing between contacts and mechanical construction that resulted in excessive pulse duration.

We found a novel solution to this problem through the application of an ordinary household mousetrap. The trip mechanism was removed from the thin wooden baseplate and mounted intact on a heavier piece of plywood. A piece of piano wire was bent into a spring-type electrical contact. This was mounted on the base so that the clamping bar on the trap would momentarily contact the wire during its travel when the trap was sprung.

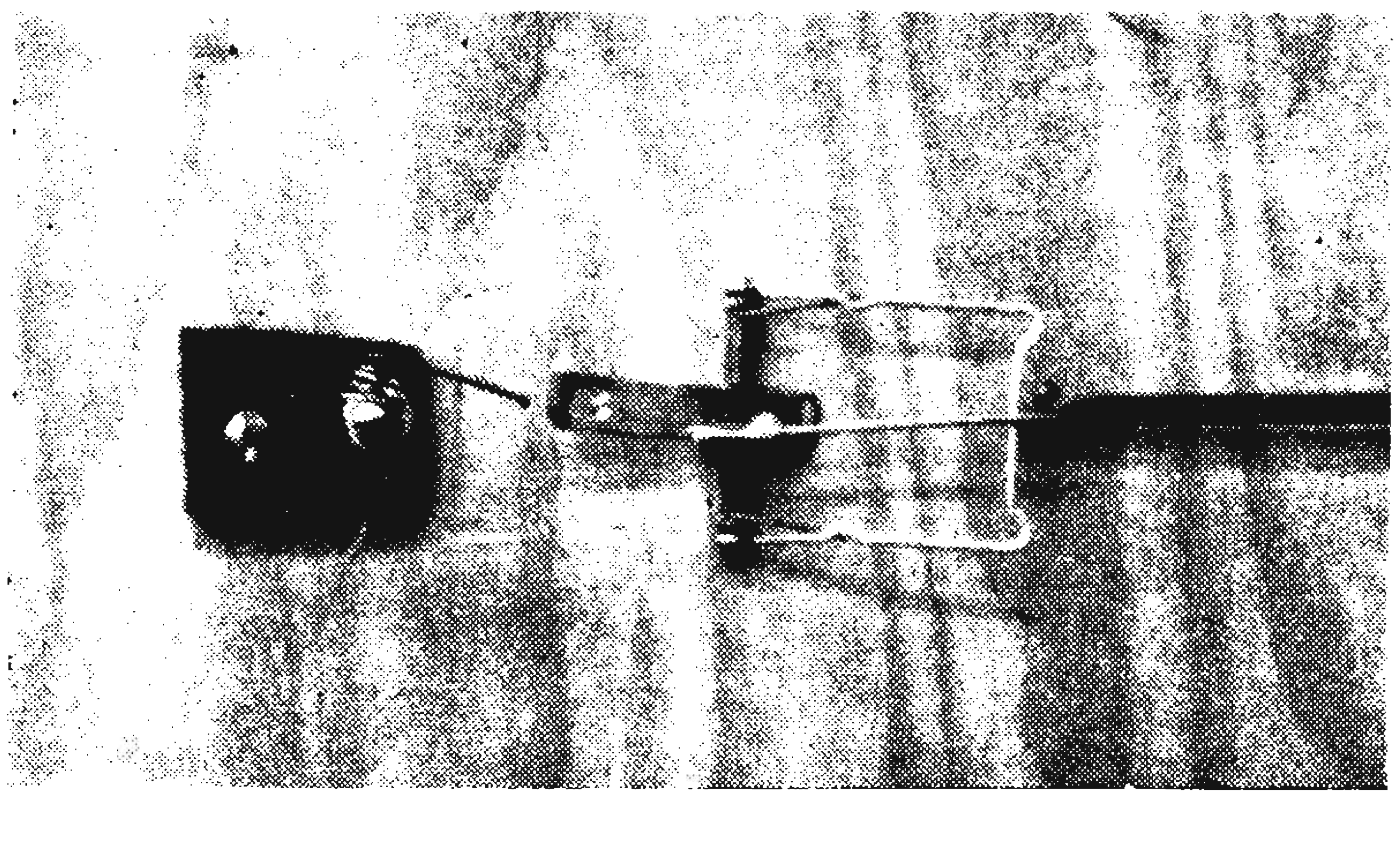

(A) High-voltage pulse generator uses mousetrap mechanism to get 0.08 msec output.

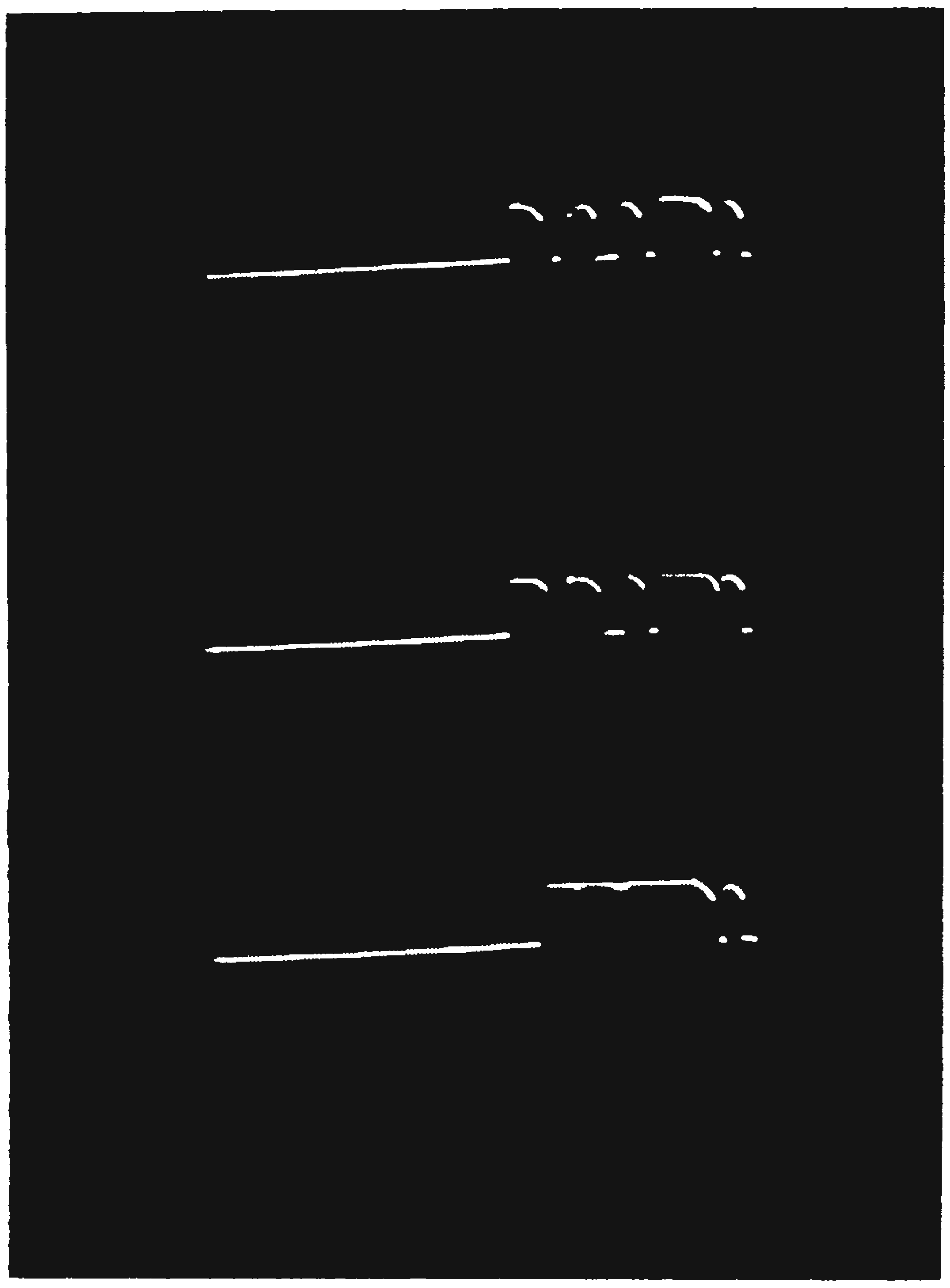

(B) Waveforms show effect of varying contact wire length on pulse duration.

A simple probe made of an insulating material was used to manually trip the switch —resetting was done by hand.

This switch was tested on an oscilloscope and it was found that the dc-pulse interval was 0.08 msec. By varying the length of the contact wire, this pulse duration can be varied. The lowest of the three traces illustrated shows the least "chop" and demonstrates a continuous pulse of 0.08 msec duration.

This unorthodox approach solved the problem of supplying a dc pulse of up to 10,000 v for durations of about 1 msec.

Kenneth G. Lusher, General Research Div., Owens-Illinois Technical Center, Toledo, Ohio.

Magnetic Tape Detects Sections of Rotating Wheel

Magnetic tape can be used to detect the open and solid sections of an IR chopper wheel while it is rotating. In the particular application shown here, the wheel

had 10 solid sections. A piece of magnetic tape was glued around the circumference of the wheel and a spot on the tape was magnetized at the start and finish of each solid portion of the wheel. Being light, the tape did not disturb the balance of the wheel. A bracket was built to hold and position a magnetic play-back head about 1/32 inch from the tape. This method caused no loading on the wheel as there was no physical contact.

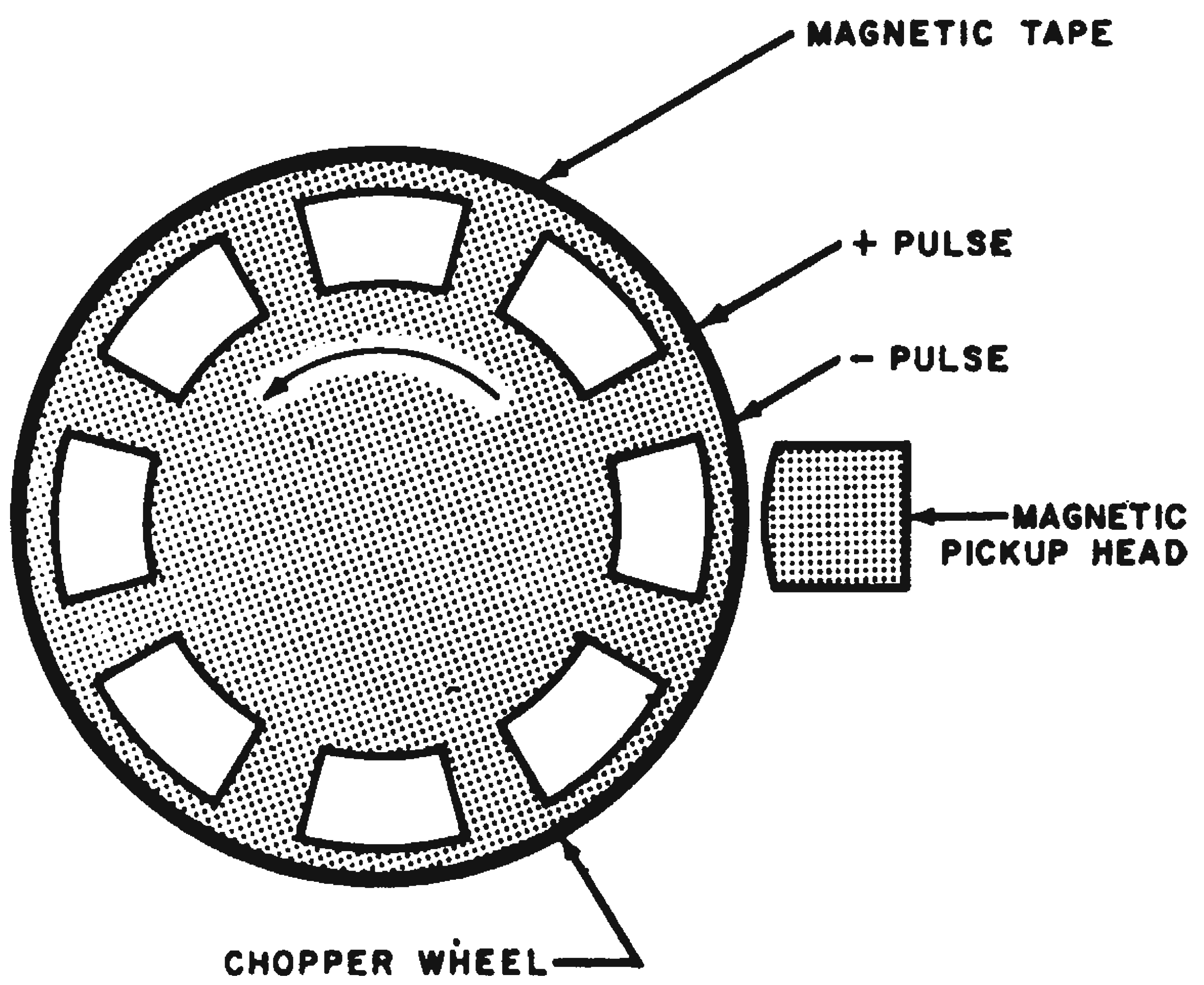

Magnetic tape cemented to edge of chopper wheel provides position information.

Robert Crawford, electronic technician, U.S. Naval Ordnance Test Station, China Lake, Calif.

Neon Driver Circuit Uses Low Voltage Transistor

Neon lamp indicators often are preferred to incandescent lamps because of their low current requirements. However, the neon requires a large voltage swing for reliable operation. The NE-2 neon has worst-case turn-on and turn-off voltages of approximately 100 and 45 volts, respectively. Since these voltage requirements are beyond the capability of a transistor flip-flop, a neon driver circuit is required.

The driver circuit shown here uses only one transistor with a low voltage, low current dc power supply. The power-pack section serves as the high-voltage supply. Drive requirements from the flip-flop are 0.25 ma at 6 volts.

When a 60-cps line voltage is placed on the primary winding, a peak ac voltage of 110 volts will appear across both secondary windings S_1 and S_2 but will be 180 deg out of phase. The tap is positioned so that when the input is at its positive peak ($t = t_1$), the voltages at the secondary windings will have the values indicated.

Under these conditions, diodes D_1 and D_4 will conduct and diodes D_2 and D_3 will be back-biased. When transistor Q_1 is biased at cut-off (input of +6 v), the neon will light because V_{AB} = 110 volts. When the input is at its negative peak ($t = t_2$), all secondary voltages will change their signs. Diodes D_2 and D_3 will conduct and diodes D_1 and D_4 will become back biased.

If the input voltage remains at +6 volts, the neon will light because once again V_{AB} = 110 volts. The neon will therefore switch from ON to OFF at a rate of 120 cycles.

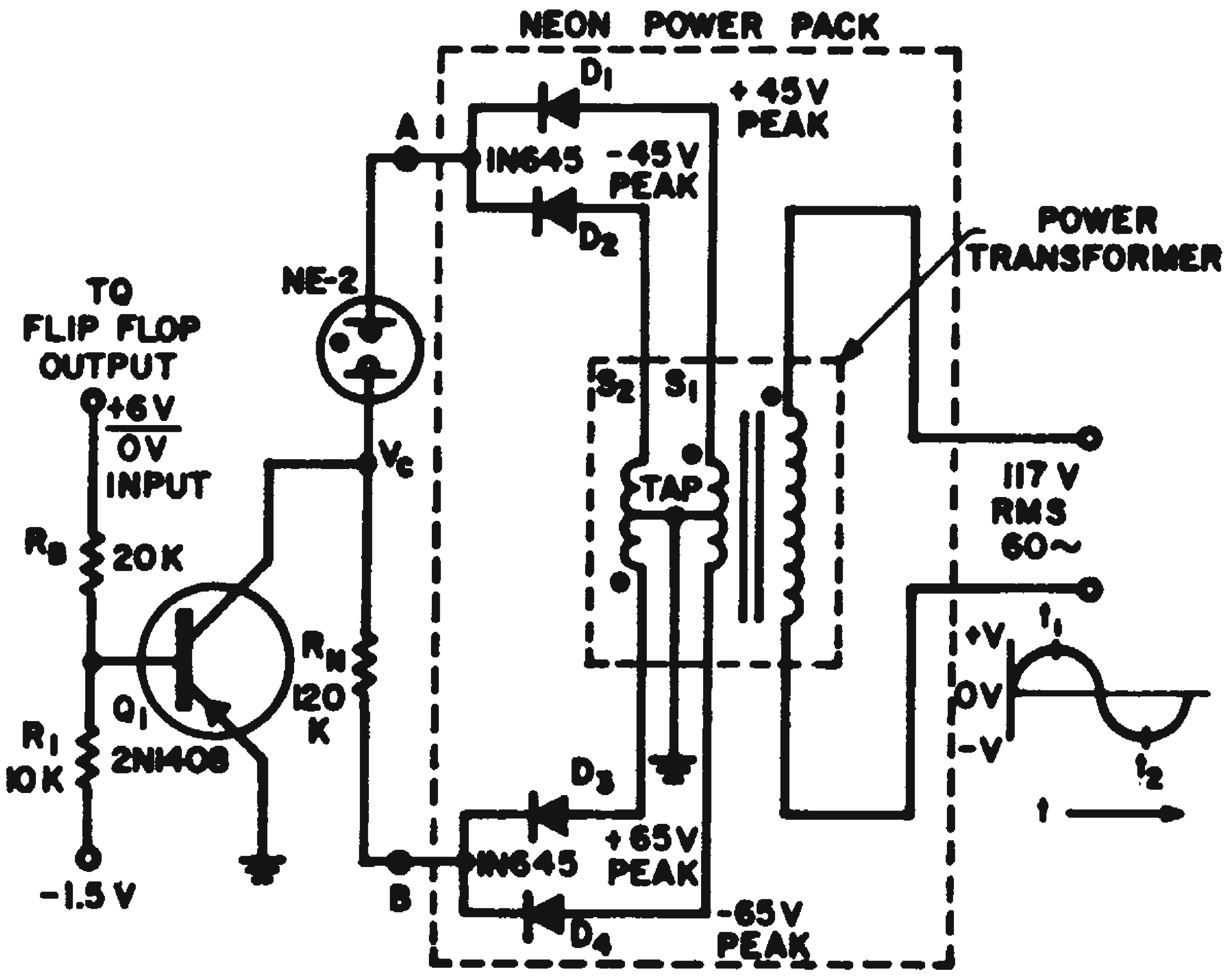

Transformer turns radio for neon power pack is 1.5: 1:1 with secondary tap at 0.41 x *T*. Voltages shown are peak values measured at t_1, and t_2.

When the input goes to zero volts, Q_1 will saturate and the voltage across the neon will never exceed 45 volts peak. Therefore, the neon will extinguish and remain off as long as V_C is at ground potential. A full-wave design was preferred over a half-wave power pack because the higher ripple frequency allows resistor R_N to be increased without a decrease in the lamp brightness. Thus, the required base current needed to saturate Q_1 is reduced. The voltage at V_C will never become positive because the sustaining voltage of the neon will always be greater than 45 volts and the collector cannot become forward-biased.

G. Cleveland, electronic research engineer, Lockheed Missile and Space Co., Sunnyvale, Calif.

Zener Diode Reduces Schmitt Trigger Hysteresis

The conventional Schmitt trigger circuit is capable of detecting the point at which a signal passes through a given voltage level in the "turn-on" direction. However, the circuit will stay in the *on* condition even after the input voltage has dropped considerably lower than the triggering point. A circuit that greatly reduces this deficiency is shown in the schematic. A 6-v Zener diode, CR_1, replaces the usual feedback resistor.

Design specifications called for an indicator bulb to light when the input voltage was in excess of 18 v. Less than 1 per cent loading of a 5000-ohm source called for high-input impedance. The input triggering point could be set anywhere from 17 to 20 v by adjusting the potentiometer.

When the triggering point of the circuit was set to 18.3 v the corresponding turn-off point was 18 v. At a temperature of 135 F the firing point shifter to 18.1 v, turning off at 17.8 v. If the Zener diode is replaced by a resistor, the firing point and turnoff point will differ by more than 4 v.

Richard E. Risely, electronic engineer, Systems Research Laboratory, Motorola Inc., Riverside, Calif.

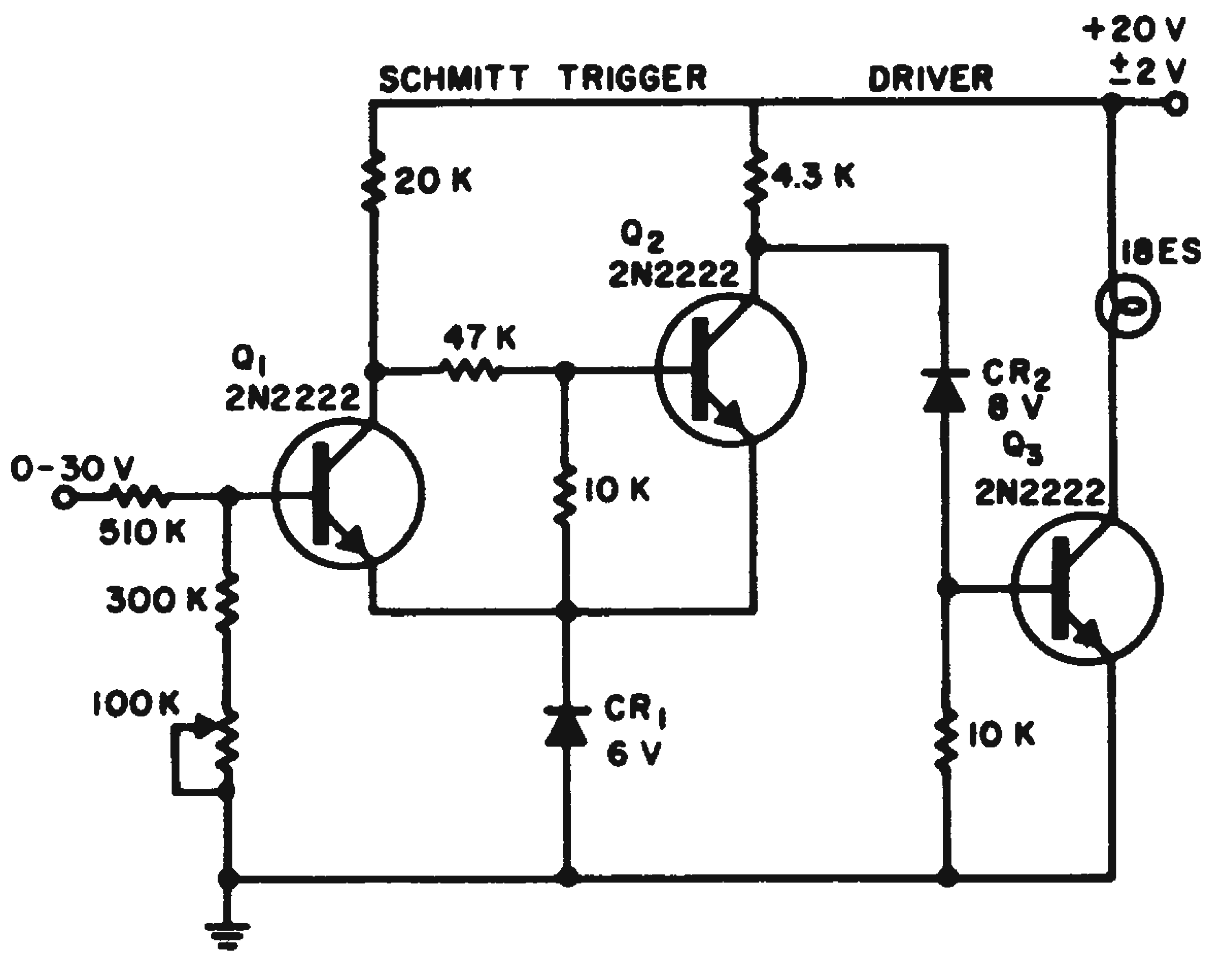

Hysteresis is reduced from 4 v to less than 0.4 v by addition of Zeneer diode.

Short-Duration Pulses Drive Visual Indicators

Visual indication of the performance of a counter or logic system is not always easy to obtain. Often the signals are not long enough to turn a light bulb on and off.

A simple circuit to provide visual indication can be made using two pnp transistors. It is possible to achieve the same result with only one transistor, but the use of two stages allows more timing versatility and permits the use of smaller values of capacitors. The circuit shown in the diagram has been used to provide light indications with signal times as short as 100 nsec and counting signals as short as 100 μsec.

The *RC* timing circuit switches on Q_1 when the Zener voltage is overcome. The diode shunting *R* assures discharge of *C* when the short off signal occurs. Q_1 provides current amplification to operate Q_2 and assure breakdown of the Zener diode. By selecting the *RC* time constant to provide an adequate balance of light-on and light-off time at the maximum repetition rate, this circuit will operate satisfactorily at any frequency lower than $1/RC$.

For the specific application, a value of 30 K for *R* and 2.2 μf for *C* provided optimum light indication.

Ian A. Webb, scientist, Edgerton, Germeshausen and Grier, Goleta, Calif.

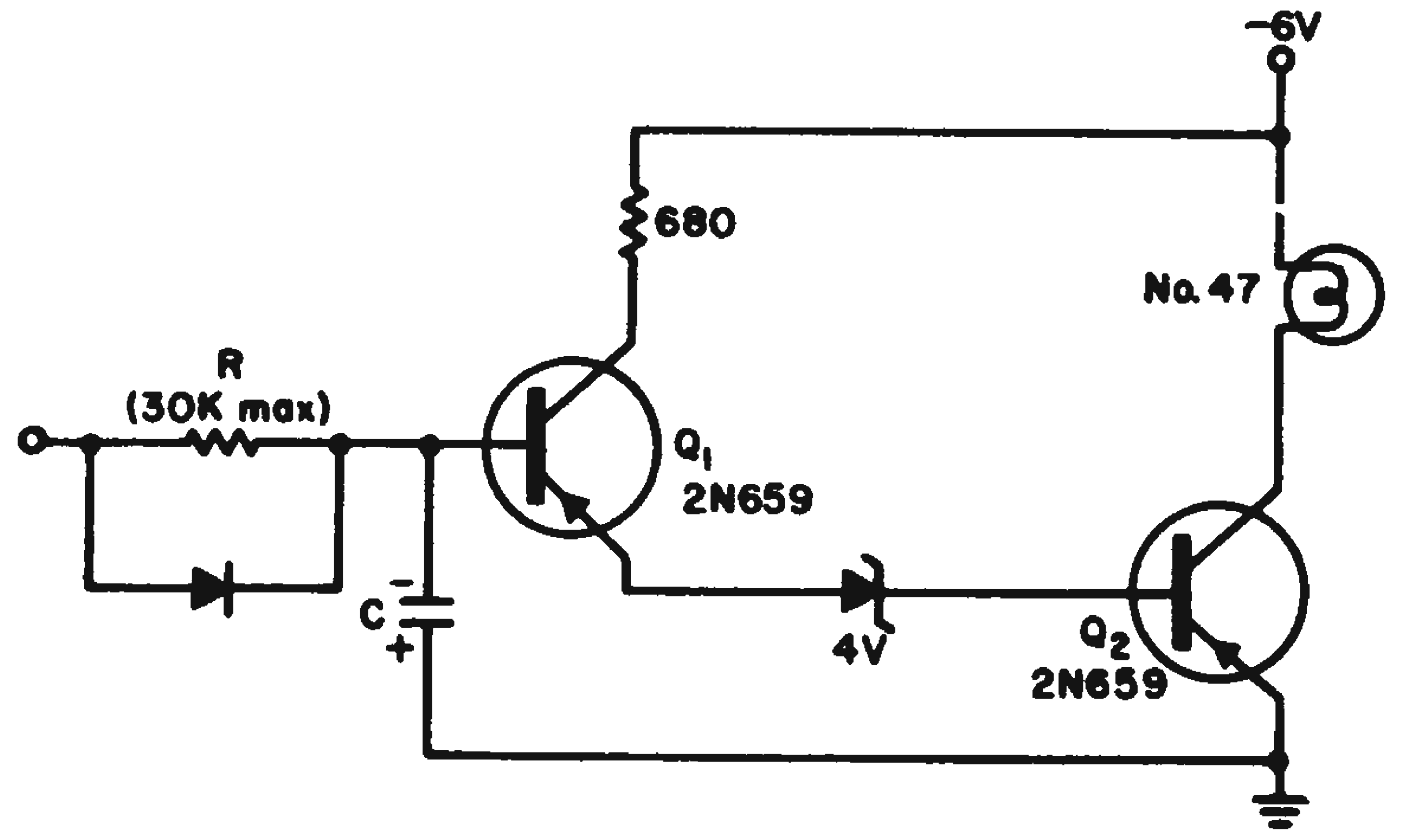

Indicator light drive circuit can be activated by very short pulses.

Starter Circuit Guides Counter-Tube Beam

An automatic starting circuit is desirable in many Beam-X tube applications. The circuit is dc-coupled, making its operation independent of interruptions and rate of rise considerations in the supply voltages.

Before the beam is formed, no appreciable cathode current flows. Transistor Q_1 is turned on by current through R_1 causing the spade potential to fall. The beam is forced to form to the associated target. The operating cathode current diverts the current from Q_1 causing it to be cut off. CR_1 keeps the operating cathode potential from rising appreciably.

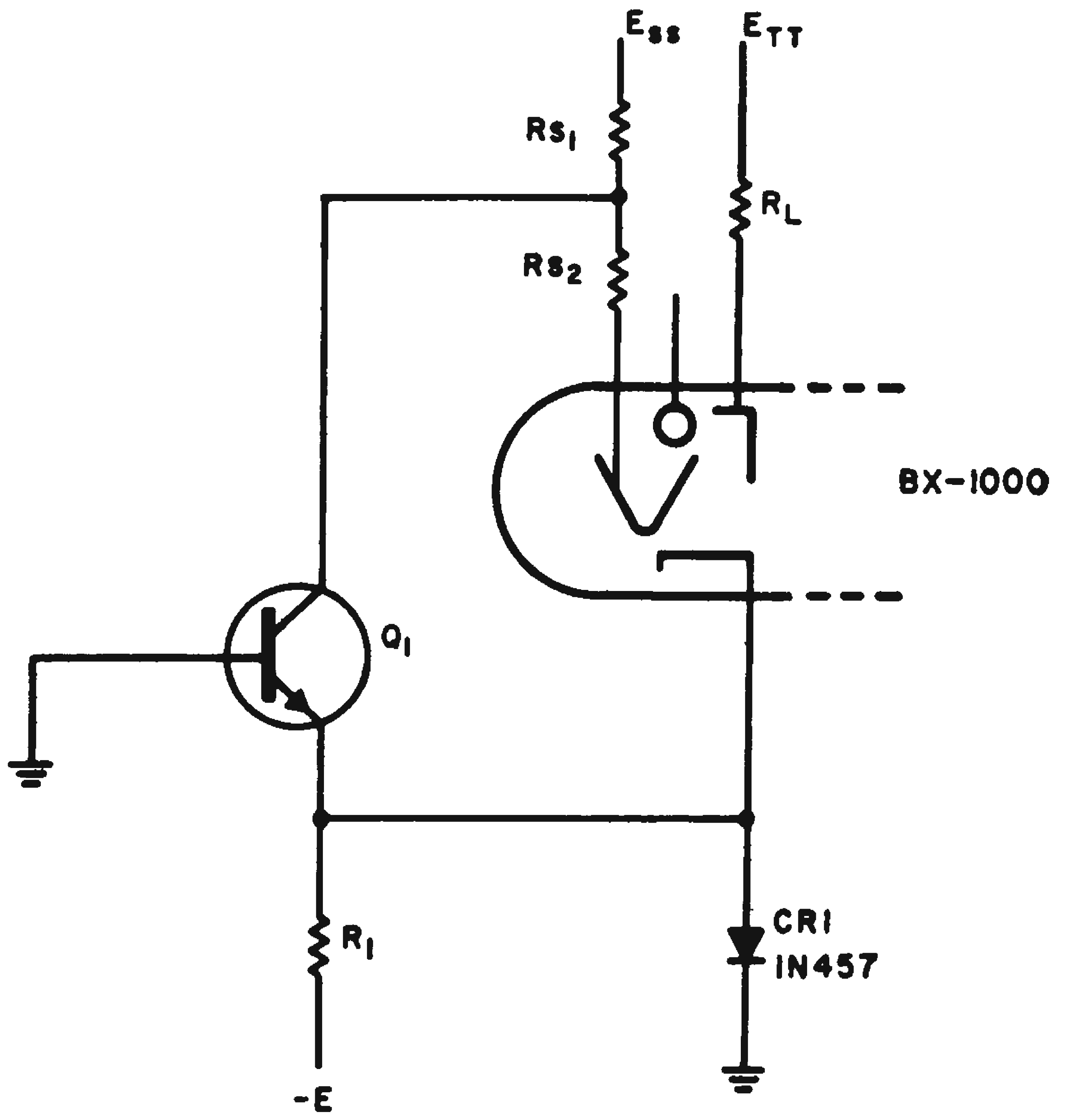

Starter circuit for Beam-X tube forces beam to form to selected target.

For determing circuit values, the following inequality holds:

$$I_K > \frac{E}{R_1} > \frac{E_{ss}}{R_{s1}} \text{ for } B >> 1$$

Typical operating potentials and circuit parameters are:

$$I_k = 3 \text{ ma.};\ E = 12 \text{ v};\ E_{ss} = 55 \text{ v};\ R_{s1} = 51 \text{ K};$$
$$R_1 = 6.2 \text{ K};\ Q_1 = \text{2N1990}.$$

Karl Springer, member of the technical staff, Hughes Aircraft Co., Culver City, Calif.

Simplified Pulse Circuit Has Low Output Impedance

Emitter-followers are often used to provide a low output impedance for feeding linear signals to long cables. This technique minimizes noise pickup and the shunting effect of cable capacitance on higher frequencies. However, this circuit suffers a serious disadvantage when applied to fast-transition pulse signals.

A simple gain stage, direct-coupled to an emitter follower is shown at (a). When a negative signal is applied to the input, Q_1 goes to cutoff and a low driving impedance of approximately R_1/H_{FE} forces the output positive.

When a fast-rising positive signal is applied, Q_1 saturates and its collector, with the base of Q_2, go toward ground. The emitter of Q_2 will not necessarily follow this, however, since it can only supply current toward the output. Thus the emitter junction of Q_2

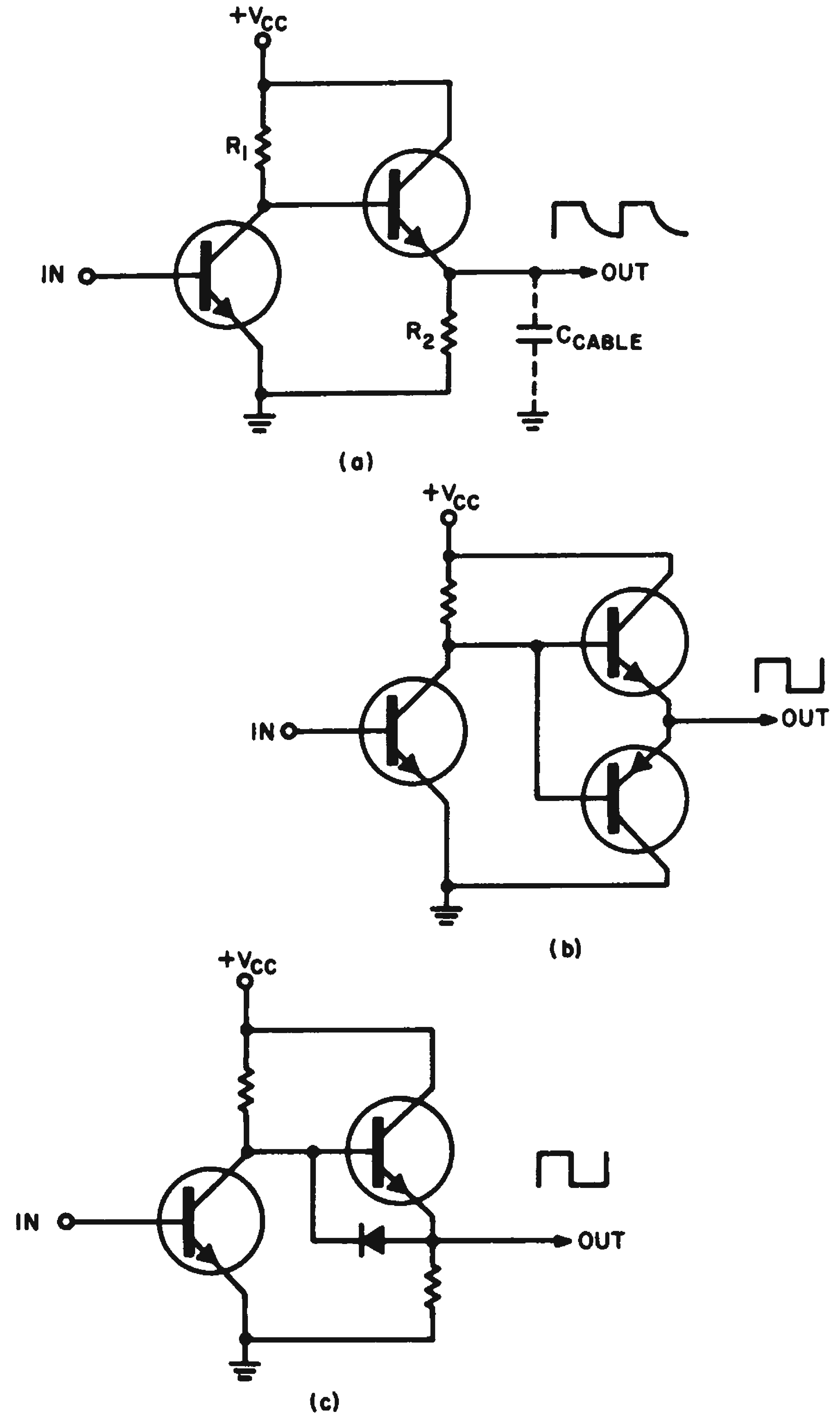

Gain stage with emitter follower (a) distorts square-wave output. Complementary emitter follower (b) can be simplified as shown in (c).

will be reverse-biased for a time immediately after the transition.

Output fall-time is determined by the time-constant dictated by load capacitance and R_2. Thus the output for an ideal square-wave input to the circuit of (a) would be distorted as shown.

The complementary emitter-follower shown in (b) will present a low output impedance for both positive and negative transitions and is frequently used in pulse work. However, a simpler and more economical solution is shown in (c). For positive outputs the diode is reverse-biased and the circuit is equivalent to (a). For the other output state the diode provides a load discharge path to the collector of saturated transistor Q_1, thereby greatly decreasing the output fall time.

Maxwell Strange, electronic engineer, Goddard Space Flight Center, Greenbelt, Md.

Temperature Sensitive Resistors Are Low Cost Function Inverters

When accuracy and bandwidth are not critical servo-driven potentiometers or diode-break networks are not needed to generate the inverse of some arbitrary function. A simpler approach is to use positive temperature coefficient (PTC) resistor. Self-heating of the Ferroxcube PTC type P40/110/60/01 causes its *E-I* characteristic to follow an almost constant power dissipation curve. $P=E^2/R=K$; therefore, $R=E^2/K$. But $I=E/R$; so, $I=KE/E^2$ or $I=K/E$. Also $E=K/I$. By calculations based on the actual data from the data sheet $E=(K/I^{0.82})$ for more than a decade of voltage. The diagram shows circuits that can be used for current and voltage applications.

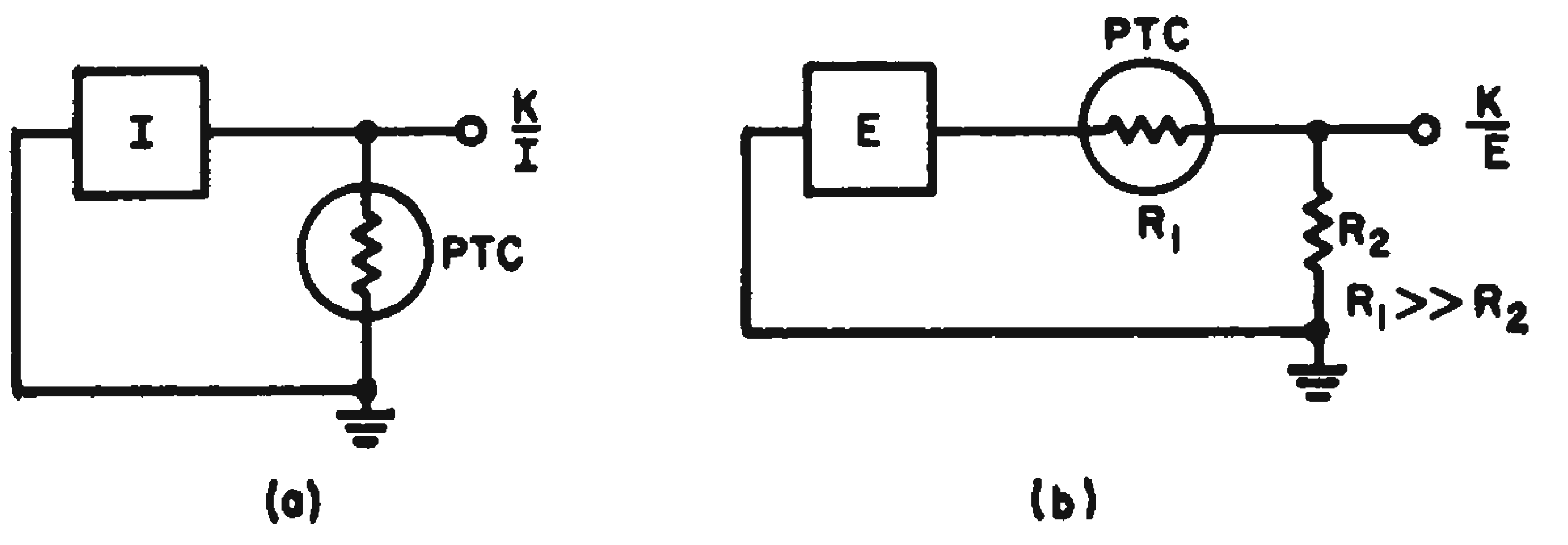

Self heating of positive-temperature coefficient resistor can generate the inverse of an arbitrary function from a current source (a) or a voltage source (b).

Peter A. Ralatos, senior design engineer, The Marquardt Corp., Pomona, Calif.

Modified NOR Circuit Automatically Presets Flip-Flop

In the design of digital equipment it became apparent that a method would have to be found to preset a number of flip-flops each time the equipment was turned on. Unbalanced biasing of these flip-flops was not feasible since the equipment had to be designed around a specified family of standard circuit modules.

The problem was solved by the design of a circuit to preset the collector of the desired flip-flops for about 100 milliseconds after the power was applied. At the end of the 100-millisecond interval the circuit releases the flip-flops and normal operation is resumed.

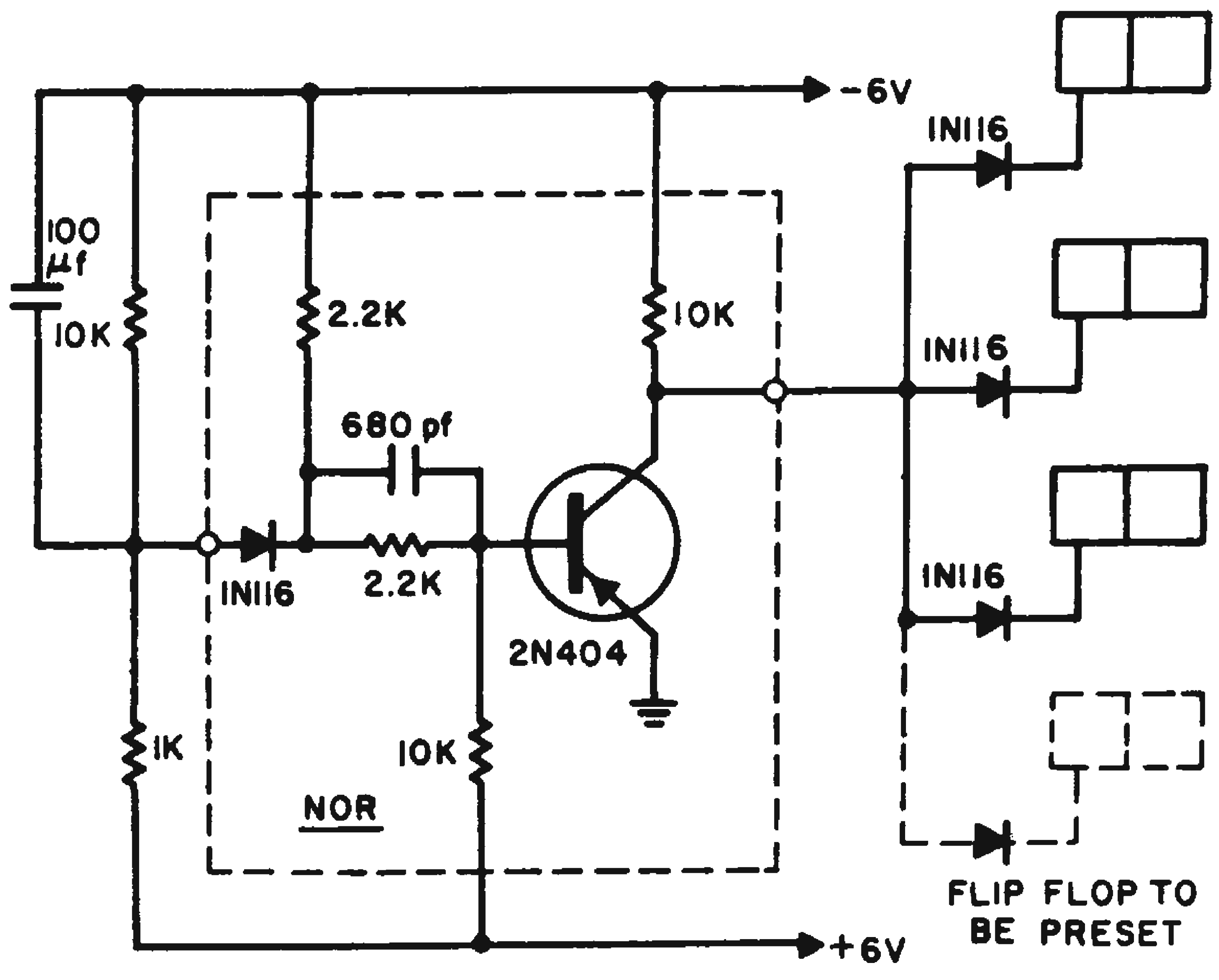

Charging of input capacitor changes state of NOR circuit to disconnect presetting circuit.

This presetting function was accomplished by modifying a standard NOR circuit, as shown in the figure. With no power applied, the 100-μf capacitor is discharged through the 10-K resistor. When power is applied to the circuit, the input to the NOR assumed a negative potential. This logical zero at the input causes a logical ONE at the NOR output and subsequent forward conduction of the presetting diodes. As the 100-μf capacitor charges, the voltage at the NOR input rises, the input diode conducts, and the output switches from ground to −6 volts. This in turn disconnects the presetting diodes and normal operation is restored.

Jack L. Shagena, The Bendix Corp., Bendix Radio Div., Baltimore, Md.

Fast Squaring Circuit Preserves Phase Information

In converting an analog voltage waveform to digital logic levels a conventional Schmitt trigger circuit causes phase distortion to an ac-coupled waveform. What is needed is a sensitive circuit with a fast output rise-time, which maintains accurate zero crossing information.

To solve this problem, a tunnel diode flip-flop driven by a grounded emitter amplifier was used. The circuit requires only one supply voltage (plus a clamp voltage, if desired) and provides a fast output square wave regardless of input frequency while preserving phase information.

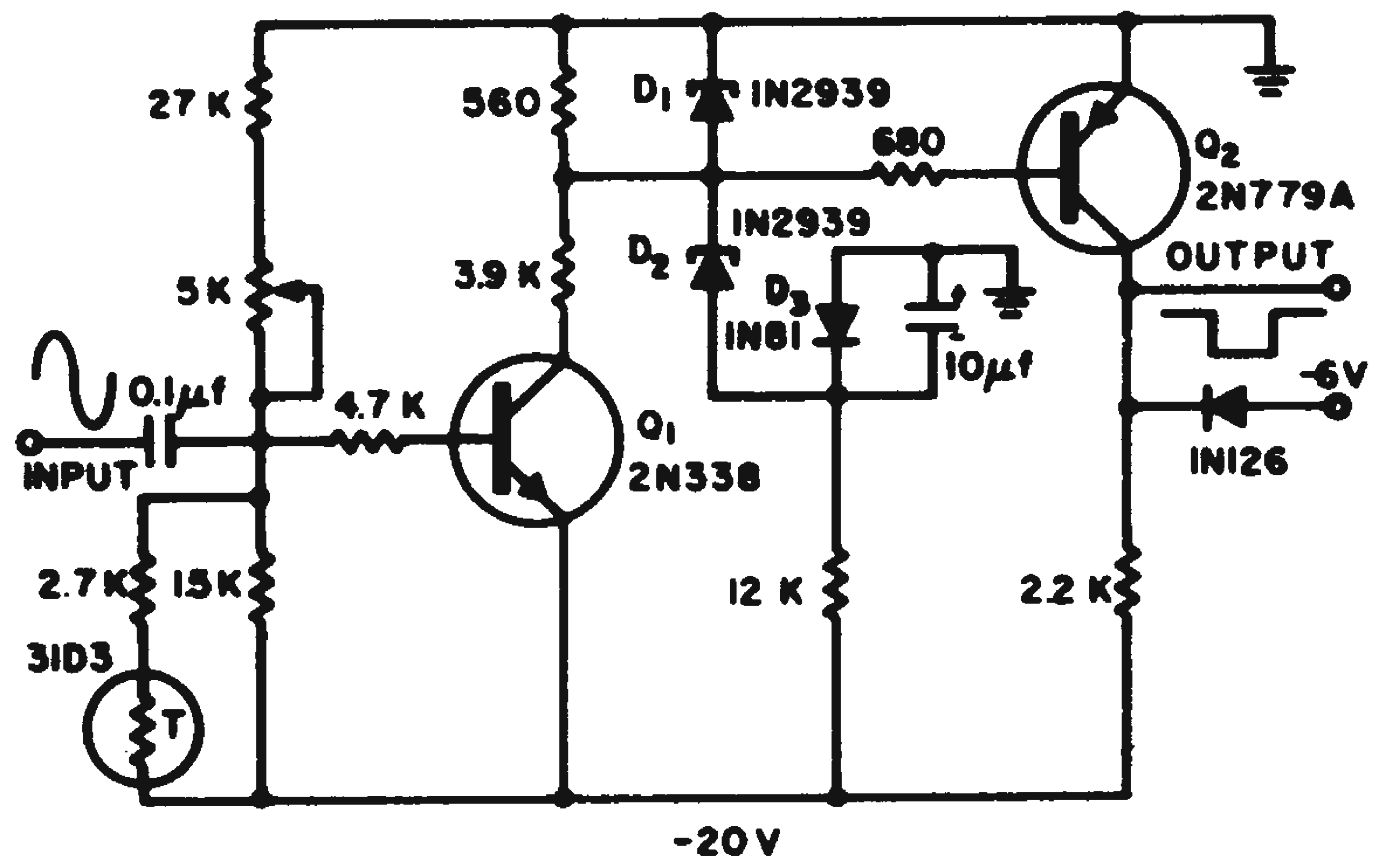

Tunnel-diode flip-flop provides fast rise pulse and preserves phase data of analog input.

In the circuit shown, an inexpensive germanium diode, D_3, is used to provide a bias voltage across the series tunnel diodes, D_1 and D_2, such that with one diode in the "high" state and one in the "low" state, peak current flows.

With transistor Q_1 not conducting, current flows through the 560-ohm resistor tripping D_2 into the "high" state and causing Q_2 to be cutoff. As Q_1 starts to conduct, current is drawn through D_1, switching it to the "high" state and D_2 to the "low" state causing Q_2 to be turned on. With Q_1 properly biased, the circuit has a hysteresis of about 150 mv.

The tunnel diode flip-flop is inherently stable with temperature, but the driving amplifier, Q_1, must be temperature compensated to insure phase accuracy.

The circuit shown has a nominal output rise-time of 50 nsec. With a 1-v peak-to-peak input signal of any frequency from 1 Kc to 25 Kc, less than five degrees phase error is introduced over a temperature range from −25 to +50 C.

Chauncey S. Miller, Ordnance Research Laboratories, Pennsylvania State University, University Park, Pa.

Quotient Circuit Substitutes for Difference Variable

Quite often in instrumentation systems the variable to be measured is obtained by the subtraction of two other quantities (a function of the variable). However, the system variable may also be obtained by considering, not the difference, but the quotient of the two quantities.

An example of such a system would be a flow-meter using two receiver channels. The magnitude and direction of the flow may be determined by the difference between the two receiver outputs. If the received signals are in any way altered, the difference signal will reflect the changes. Assuming identical changes in each receiver channel, the quotient of the two receiver-outputs will also yield the magnitude and sense of the flow.

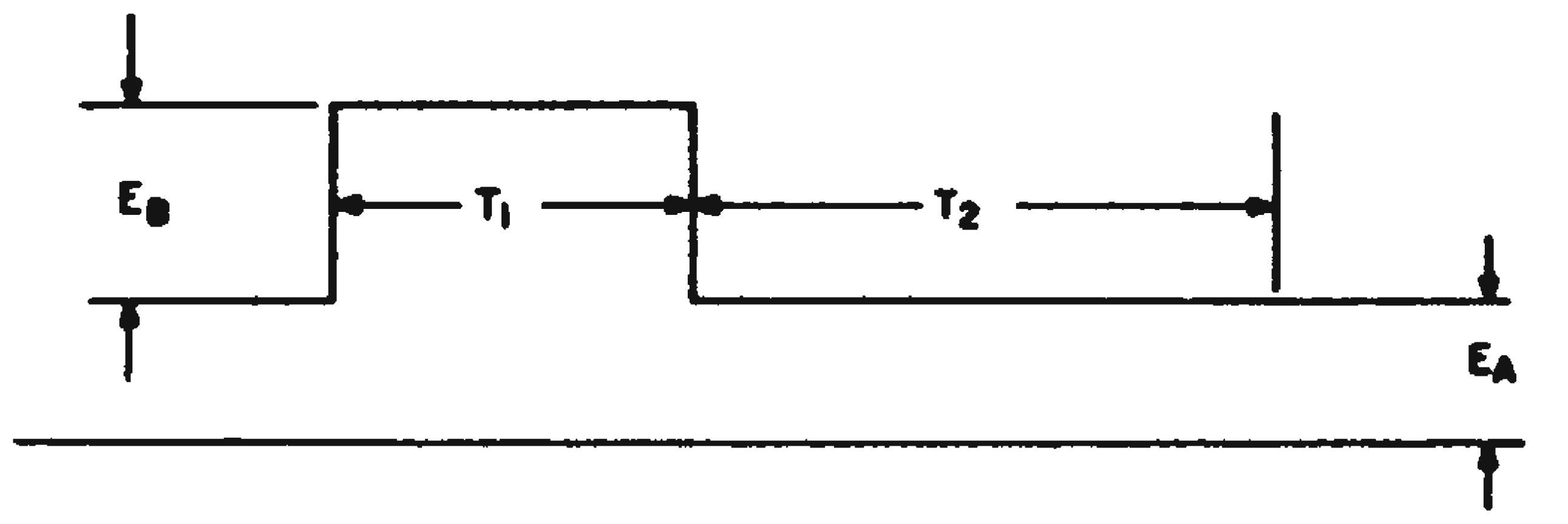

Fig. 1. Circuit uses time as an intermediate variable to obtain quotient expression.

The principle of the quotient circuit is illustrated by Fig. 1. Time, T, is used as an intermediate variable. If $T_1=K_1E_1$ and $T_2=K_1(E_2-E_1)$, then the dc output is:

$$V_{dc}= E_A + \frac{E_B K_1 E_1}{K_1 E_1 + K_1 (E_2 - E_1)} = E_A + E_B \frac{E_1}{E_2}$$

By subtracting E_A we have the desired ratio multiplied by a constant, E_B.

Fig. 2 shows the block diagram of the quotient circuit. No restriction is placed on the circuit for obtaining the individual blocks.

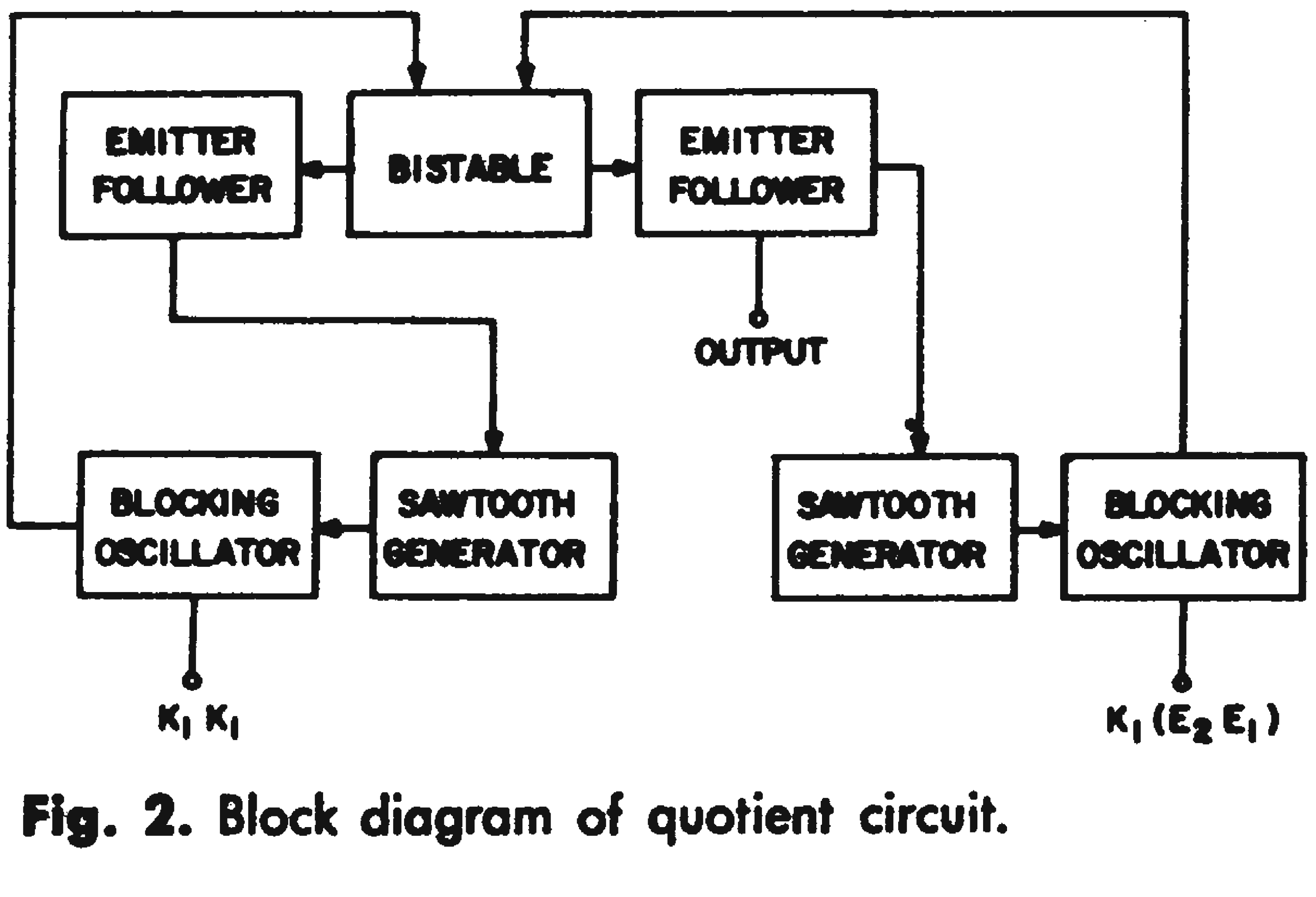

Fig. 2. Block diagram of quotient circuit.

The system is essentially free-running with a frequency stability of the order of 0.1 per cent at frequencies of 200 to 1,000 cps. The bistable multivibrator will have one side "on" and one side "off." The "off" side permits the sawtooth generator to run up until the reference voltage is reached. At this point the blocking oscillator fires and resets the bistable, producing the same action in the other half of the circuit.

The alignment of the circuit consists of adjusting the two levels of the sawtooth generator —the maximum positive voltage that the capacitors can charge to and the holding voltage. Once this is accomplished, the slopes are adjusted until they are equal. This can be done by scope and eye.

All voltages were measured with a differential voltmeter. The output voltage was measured and, on the basis of the two reference voltages, a comparison was made. The deviations were between 0 and 0.3 per cent. The accuracy of the readings made it unwise to look for greater accuracies. As an example of the system's capabilities, the unattenuated filtered output voltage read 10.82 when E_1 and E_2 were 6.00 and 10.83, when E_1 and E_2 were 8.00.

Leonard L. Kleinberg, Information Technology Div., Lockheed Electronics Co., Plainfield, New Jersey.

Transistor Improves Response and Speed Regulation of DC Motor

Placed in parallel with the armature, a transistor can help to improve the response and speed regulation of a dc motor.

The speed regulator on a dc motor is often a centrifugal switch whose contacts are placed in series with the motor. They operate to disconnect the supply whenever the motor overspeeds. The desired speed level is set by adjusting the tension on the spring of the switch. A common problem with this type of operation is the elimination of the dynamic breaking feature. No forcing is available to bring the motor quickly back to the desired speed. Additionally—the contacts

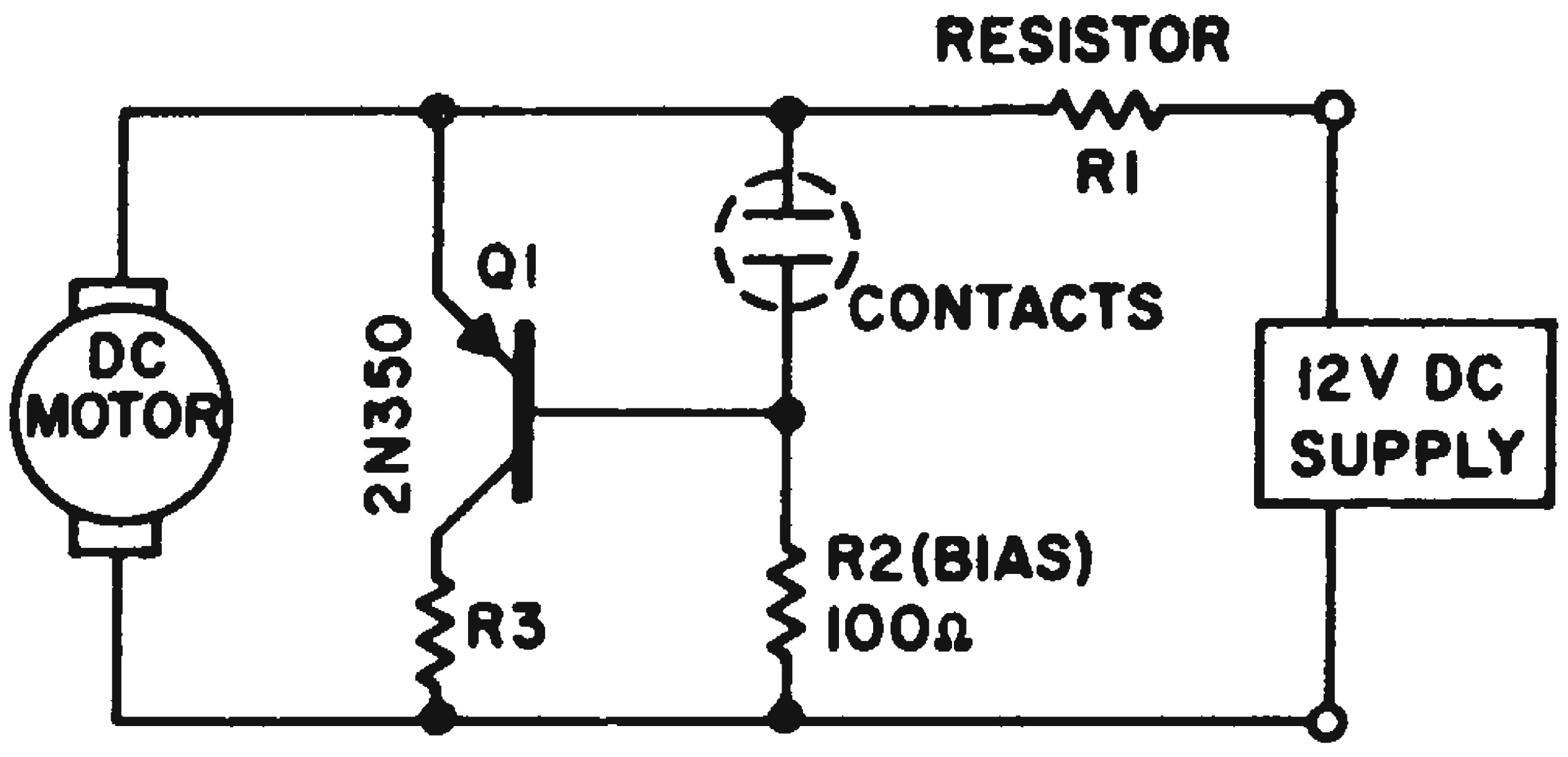

The transistor, used with the centrifugal switch contacts, helps to improve the speed regulation of the dc motor.

have to carry the full motor current and are liable to arc and pit, causing drift and inaccuracy in regulation.

A substantial improvement is introduced by using the circuit shown in the figure. The centrifugal switch contacts are now placed from the base to the emitter of transistor *Q1.* When they are closed, *Q1* is turned off and all the current flows into the motor. When the contacts open, transistor *Q1* is biased on through resistor *R2. R3* limits the maximum current and dissipation of *Q1.*

The transistor shunts the motor armature and acts both as a dynamic breaking path and, in combination with *R1,* as a speed regulator. As soon as the motor overspeeds the contacts open. Because *Q1* is conducting there is an additional drop across *R1.* This lowers the voltage applied to the motor and tends to bring it back to the preset level.

Baruch Berman, Chief Engineer, ACF Electronics, Paramus, N. J.

Bridge Circuit Temperature Stabilizes Relay Operation

The operation of a relay from the collector current of a transistor is a popular circuit configuration. However, this arrangement is not completely stable as the ambient temperature is varied.

While fancy and expensive circuits can be designed to provide an accurate relay trip-point over a wide temperature range, the circuit shown has been found to perform well over a temperature range of —55 C to +85 C.

The circuit is a bridge, with the silicon rectifier *CR1* compensating for the temperature sensitivity of silicon transistor *Q1.* A positive temperature coefficient resistor (Balco) may be inserted at *R3* to provide gain stabilization with temperature. For a 28-v dc supply and a 8-K relay, the approximate component values are shown in the figure. Input voltage to trip is approximately 1 v.

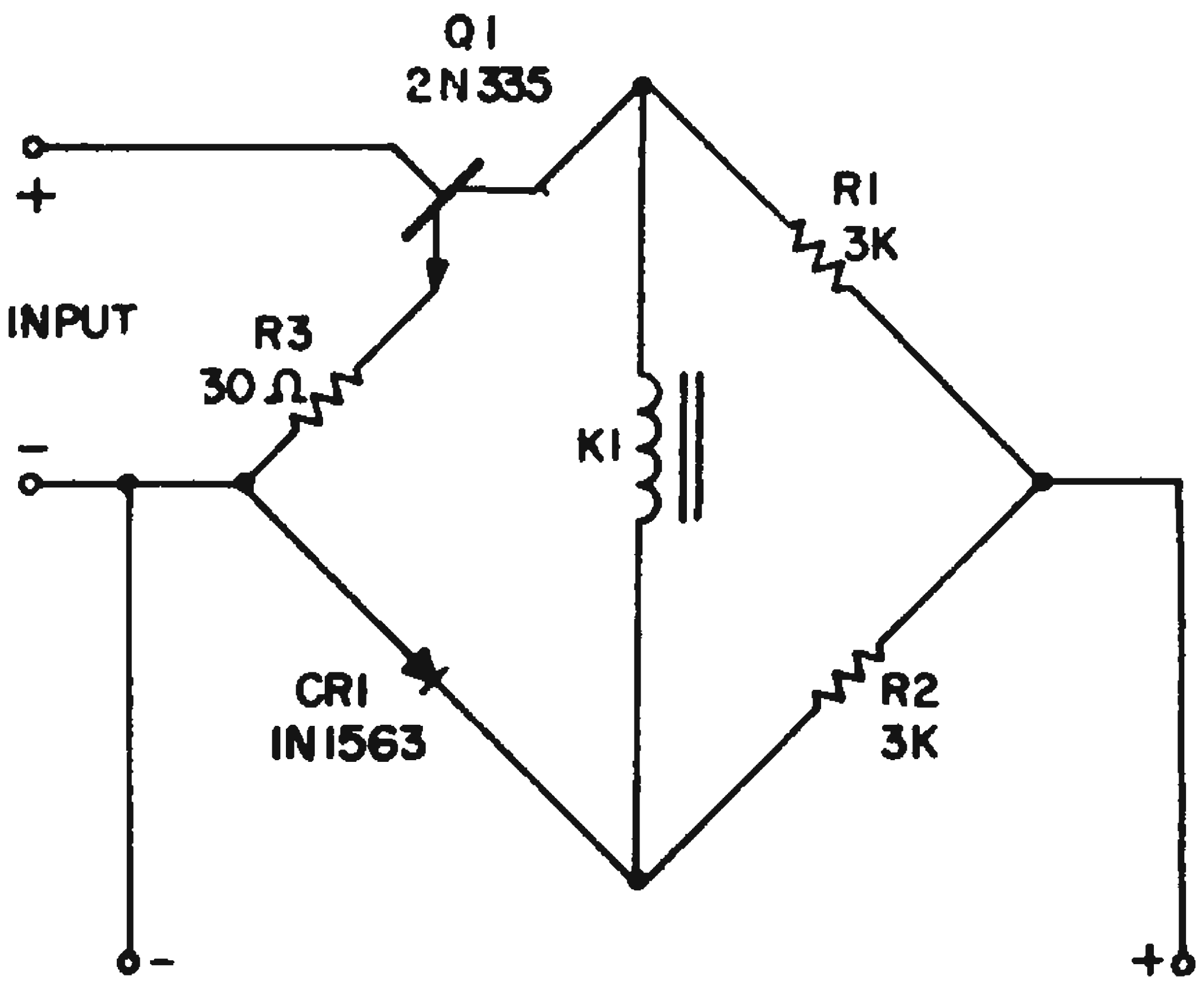

Silicon rectifier *CR1* by compensating for the temperature sensitivity of *Q1,* stabilizes the relay operation.

Thomas F. Bright, Assistant Chief Engineer, Bergen Laboratories Inc., Paterson, N.J.

Filament Voltage Controls Thyratron Cut-Off

In certain relay control circuits, 115 v ac is applied across the series circuit consisting of a relay and a thyratron. The relay is energized by bringing the control grid of the thyratron from some negative potential to the firing point.

In the circuit shown the negative potential is eliminated by applying the filament voltage to

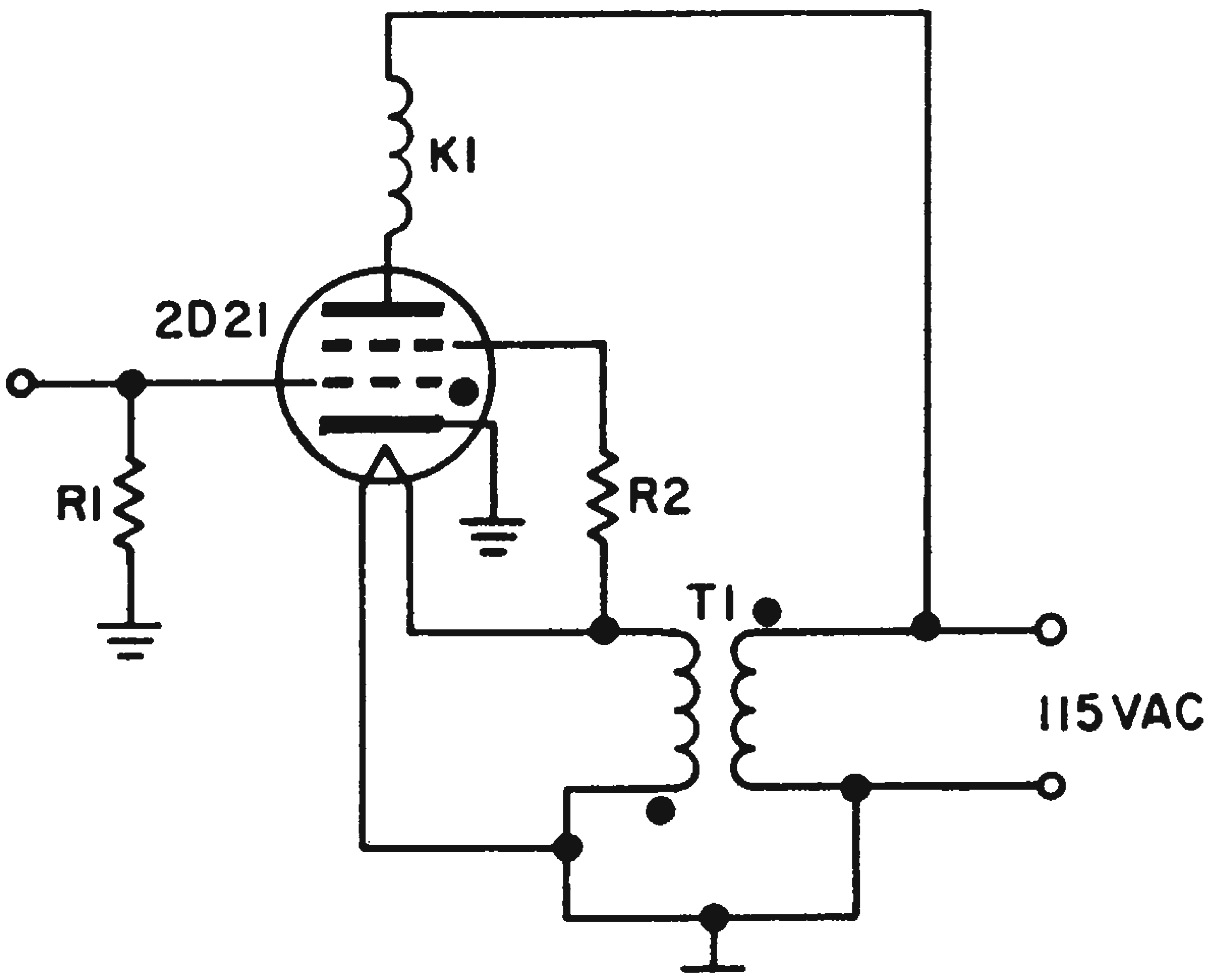

Negative voltage to hold thyratron cut-off is eliminated if the shield grid is connected to the filament supply through an inverting transformer.

the shield grid out of phase with the plate voltage. During the ac supply's positive half cycle the shield grid is negative, and the tube is cut off. During the next half cycle no conduction occurs because the plate is negative. However, if a positive potential is applied to the control grid, the tube will fire during each positive half cycle and the relay will be energized.

R. L. Fusfield, Hughes Aircraft Co., Culver City, Calif.

Diodes Allow Two-Wire Control Of Limit-Switched Motor

We wanted to control a dc, permanent-magnet motor in a system containing limit switches to prevent overtravel. The control had to be accomplished using only one "hot" wire and the common ground lead which were available in the existing cable design.

The figure shows our solution to the problem. Two sources of power were provided, one of each polarity. When the *CONTROL* switch is held in the *RIGHT* position the motor runs until the *RIGHT* limit switch opens. Since diode *CR1* will not conduct with a negative potential across it, the motor will stop.

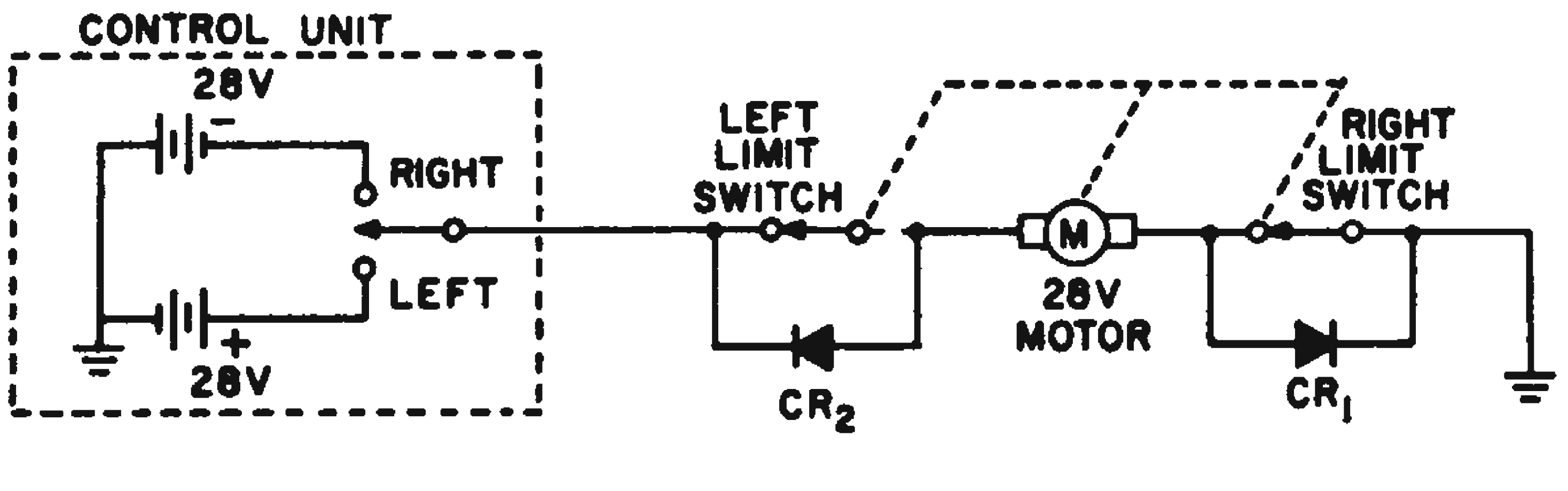

Two-wire control of the dc motor is obtained by placing a diode across each of the limit switches.

With the switch in the *LEFT* position a positive potential is applied and *CR1* conducts. Since the *LEFT* limit switch is still closed, the motor will run in the opposite direction until the *LEFT* limit switch opens.

For the small 28-v, 100-ma motor used in this application there are many satisfactory types of diodes. 1N91 was used in our case. For larger motors, diodes must be selected to handle the starting current of the motor. Their inverse voltage rating must be greater than the sum of the supply potential and the voltage transient which occurs when a limit switch opens.

Charles C. DeFir, Senior Engineer, Hallamore Electronics Co., Anaheim, Calif.

Silicon-Controlled Rectifiers Vary Servo Motor Speed, Reduce Input Power

Usually a two-phase servo motor has its reference winding permanently connected to the line through a phase shifting capacitor, and its control winding driven by a control amplifier. In this way, the reference supply is constantly delivering power to its winding. This causes the motor to heat and makes it difficult to control the motor at low speed.

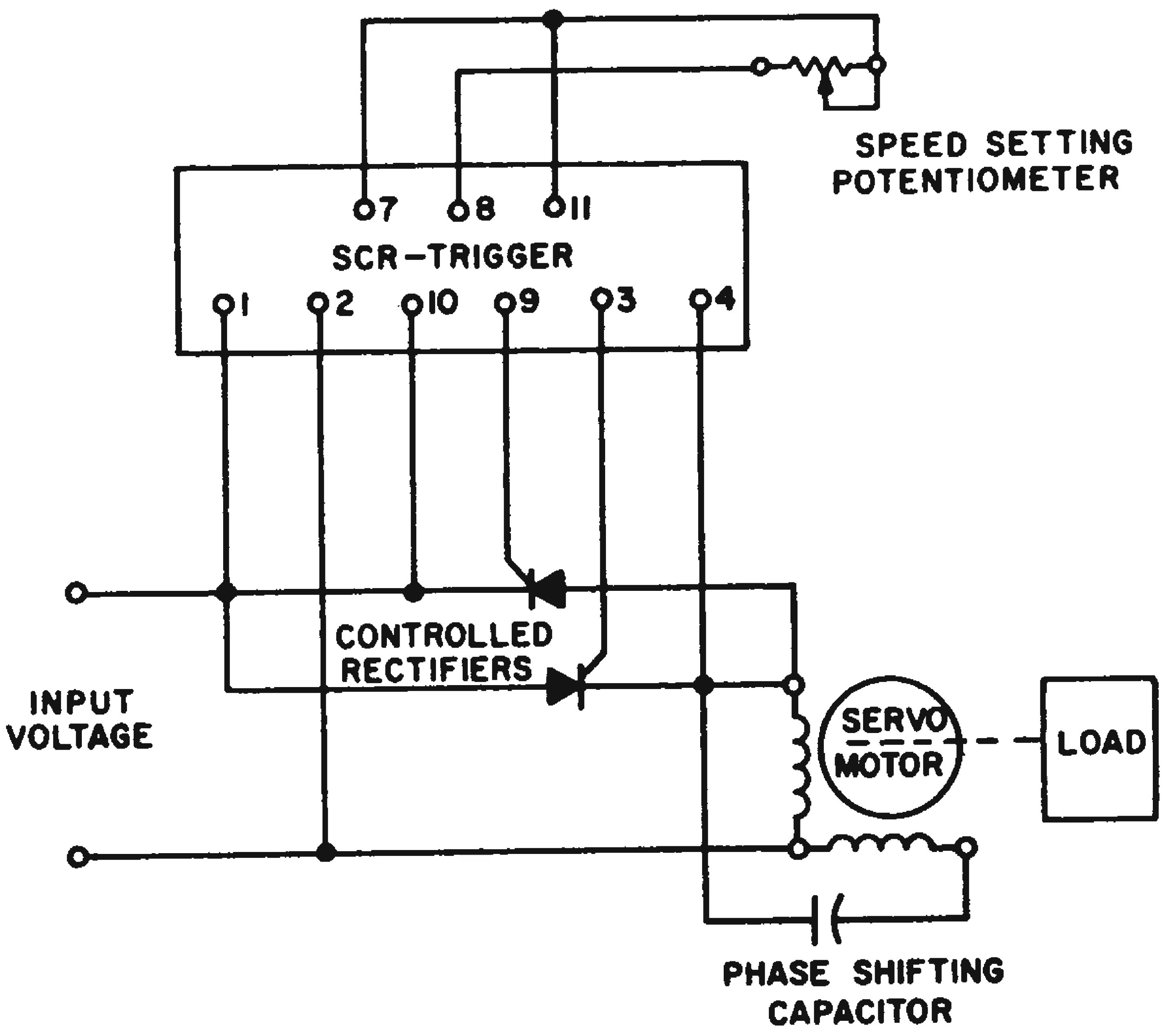

The two silicon controlled rectifiers control the speed of the two-phase servo motor by controlling the power input. When the motor is rotating, input power is zero.

A circuit which eliminates the heating problem and allows stable operation at very low speeds is shown. The silicon-controlled rectifiers are in series with the motor and both the control and reference windings are controlled by them. When the firing angle of the rectifiers is retarded by the speed setting potentiometer acting on the trigger, the total motor input is reduced and the motor slows down.

Baruch Berman, Chief Engineer, Avion, Div. ACF, Paramus, N. J.

Inexpensive Time-Delay Drop-Out Uses a Thermal Relay

In searching for an inexpensive time-delay drop-out of several seconds delay time, it was found that none were available for under twenty dollars. However, a time-delay pull-in of the thermal type was available for a little over two dollars, with a single pole, single throw contact, either normally open or normally closed. Using

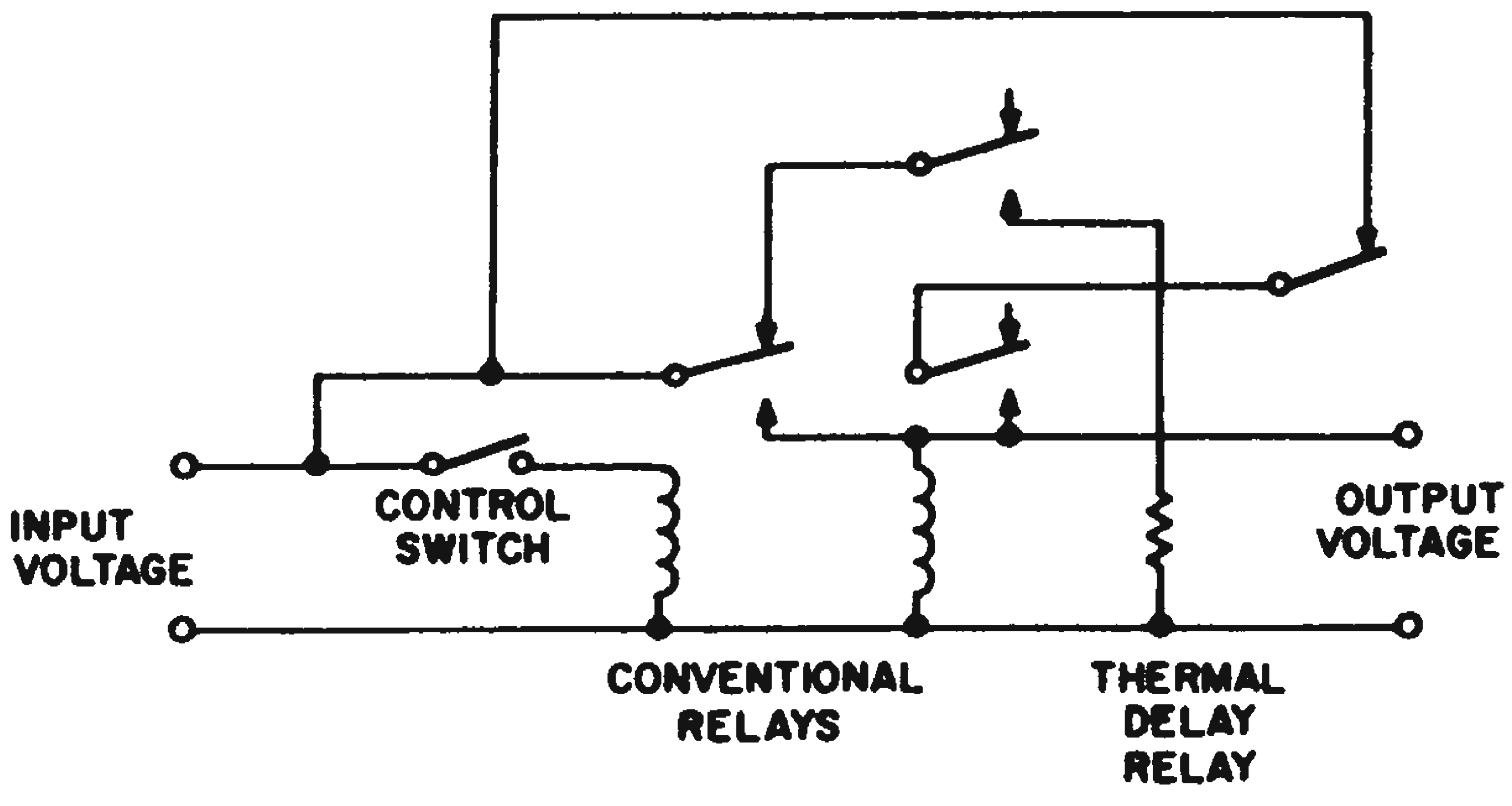

Fig. 1. After several seconds thermal relay opens causing conventional relays to drop out as well.

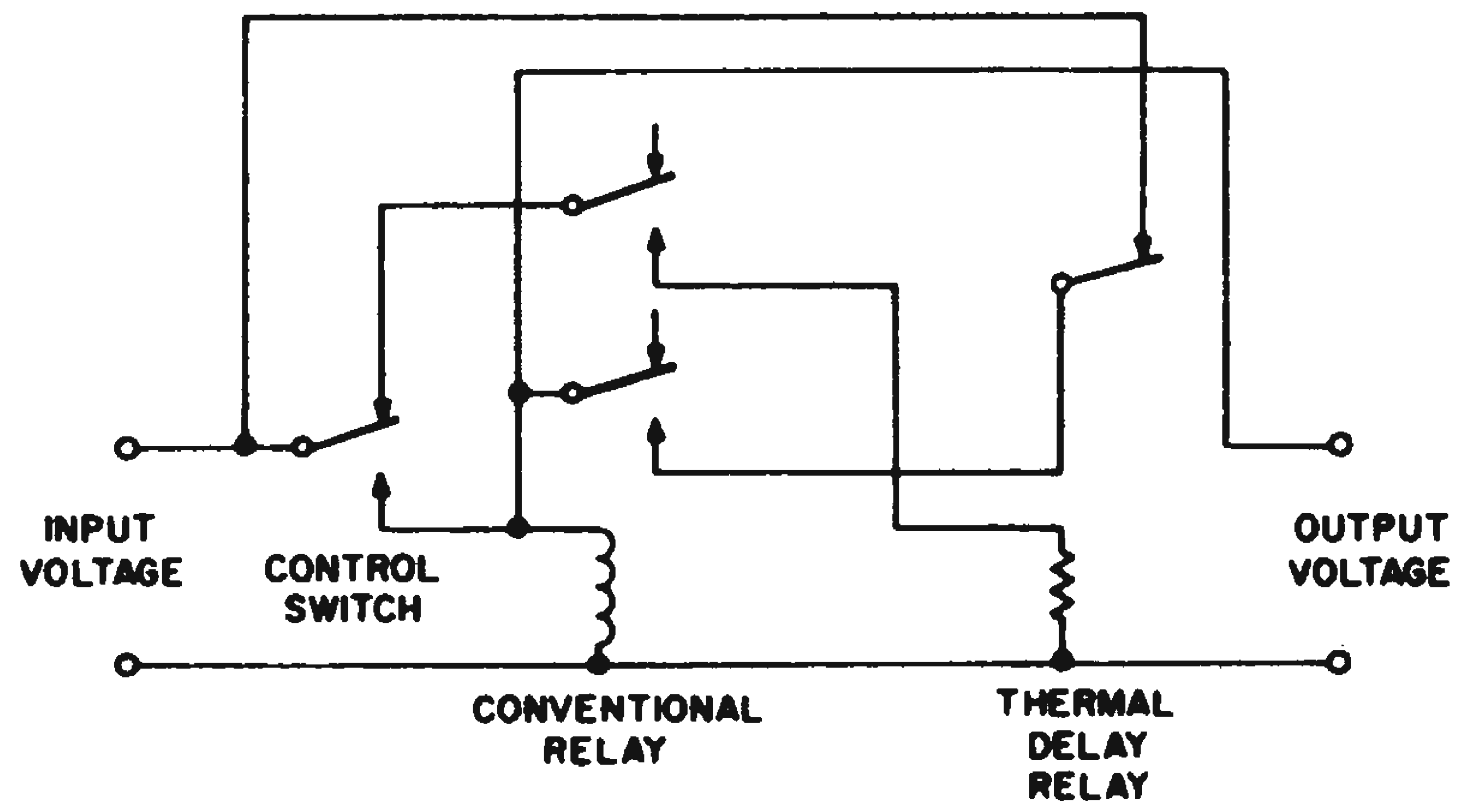

Fig. 2. Three-wire, double-throw control switch allows one relay to be eliminated.

the circuits shown, delay drop-outs were built which cost less than ten dollars each. The circuit of Fig. 1 uses three relays with a simple two-wire on-off switch for control. If there is no objection to using a three-wire double-throw control switch, the circuit of Fig. 2 permits even greater economy by eliminating one relay. In this circuit the control switch must also be capable of switching on the load current. In either circuit the delay time is nominally equal to the pull-in delay time of the thermal relay.

R. A. Jacobs, Jr., Cranbury, N. J.

Driver Closes Relays Rapidly With Almost Bounceless Contacts

A circuit was needed which would open two normally-closed relays for periods of about 6 msec, 5 times per sec. A +100-v pulse was available for control. The circuit shown opens the relays with 1 msec after the beginning of the control pulse and closes them within 1/2 msec after the pulse termination. Contact bounce time is limited to less than 1/4 msec.

Normally, the bleeder current is great enough to keep the relays closed. The capacitor-coupled, positive 100-v pulse from the cathode follower causes them to open by reducing the relay voltage to a low value.

During the 6 msec time of the 100-v control pulse, charging of the coupling capacitor causes the relay voltage to increase gradually to a value just insufficient to cause closure. This value is determined by adjustment of the 25 K potentiometer. Upon the termination of the control pulse, the negative-going signal, coupled through the capacitor, causes rapid and firm closure of the relay contacts. In the relay used (Revere Glaswitch type), absence of bounce seems due to the fact that the reed-type relay contacts are brought very close together by the smoothly-increasing coil voltage during the "off" time. When the control pulse ends, there is not enough contact movement to the closed position to generate the impact forces that cause bounce.

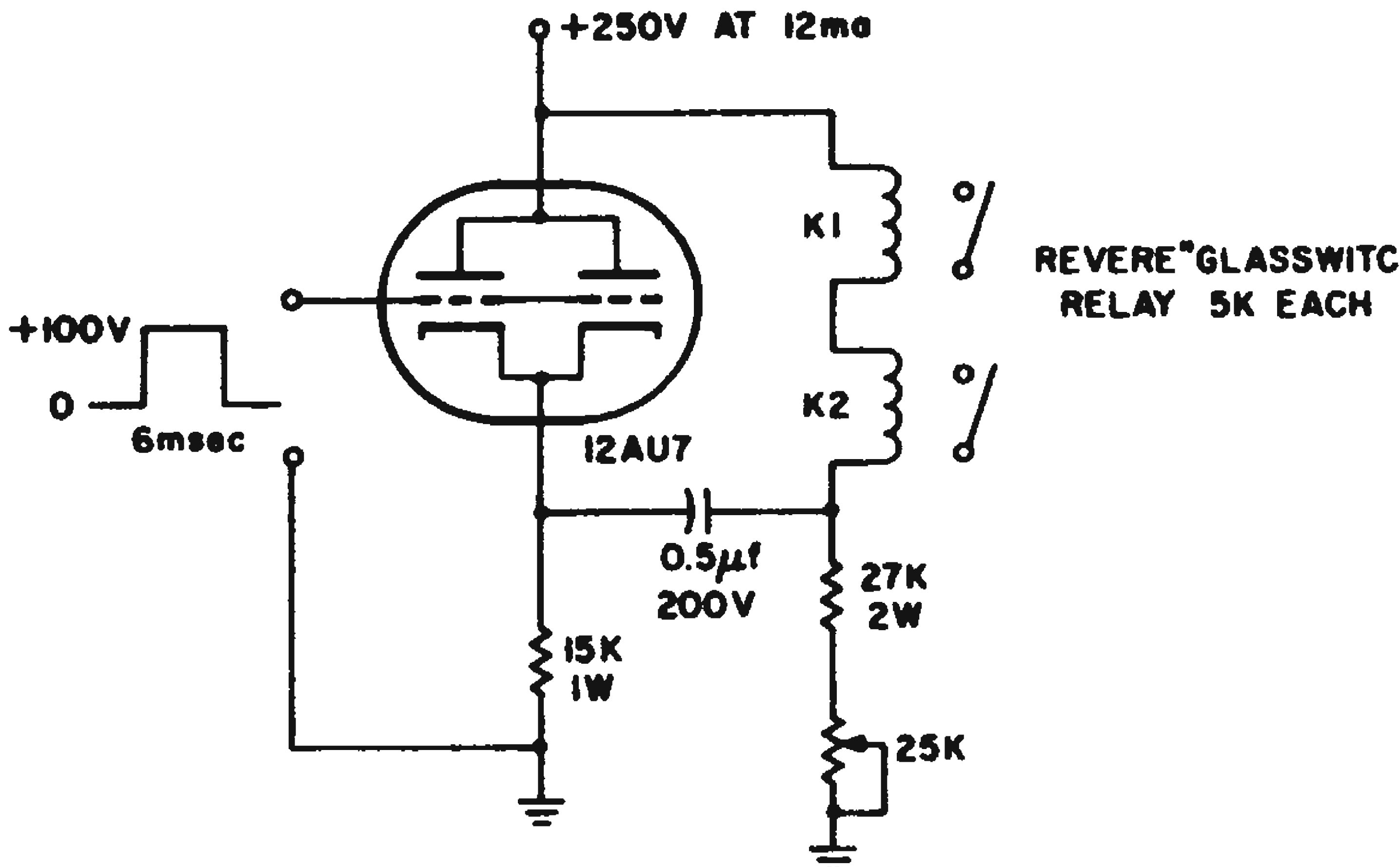

Relays are opened with application of positive pulse to cathode follower; closed on negative-going pulse termination.

K. C. Herrick, Systems Engineer, Reflectone Electronics, Inc., Stamford, Conn.

Amplified Capacitor Suppresses Arc More Completely

A capacitor is often placed across the contacts of a relay to suppress the arc that occurs when the contacts open. This prevents pitting of the contacts and the generation of radio frequency noise.

The effect of the capacitor may be increased by connecting it in the collector circuit of a transistor. In the circuit shown, before any capacitor was added, the pulse-voltage peak generated when the contacts opened was 640 v. After a 0.25 µfd capacitor was added, the voltage dropped to 340 v. When the same capacitor was

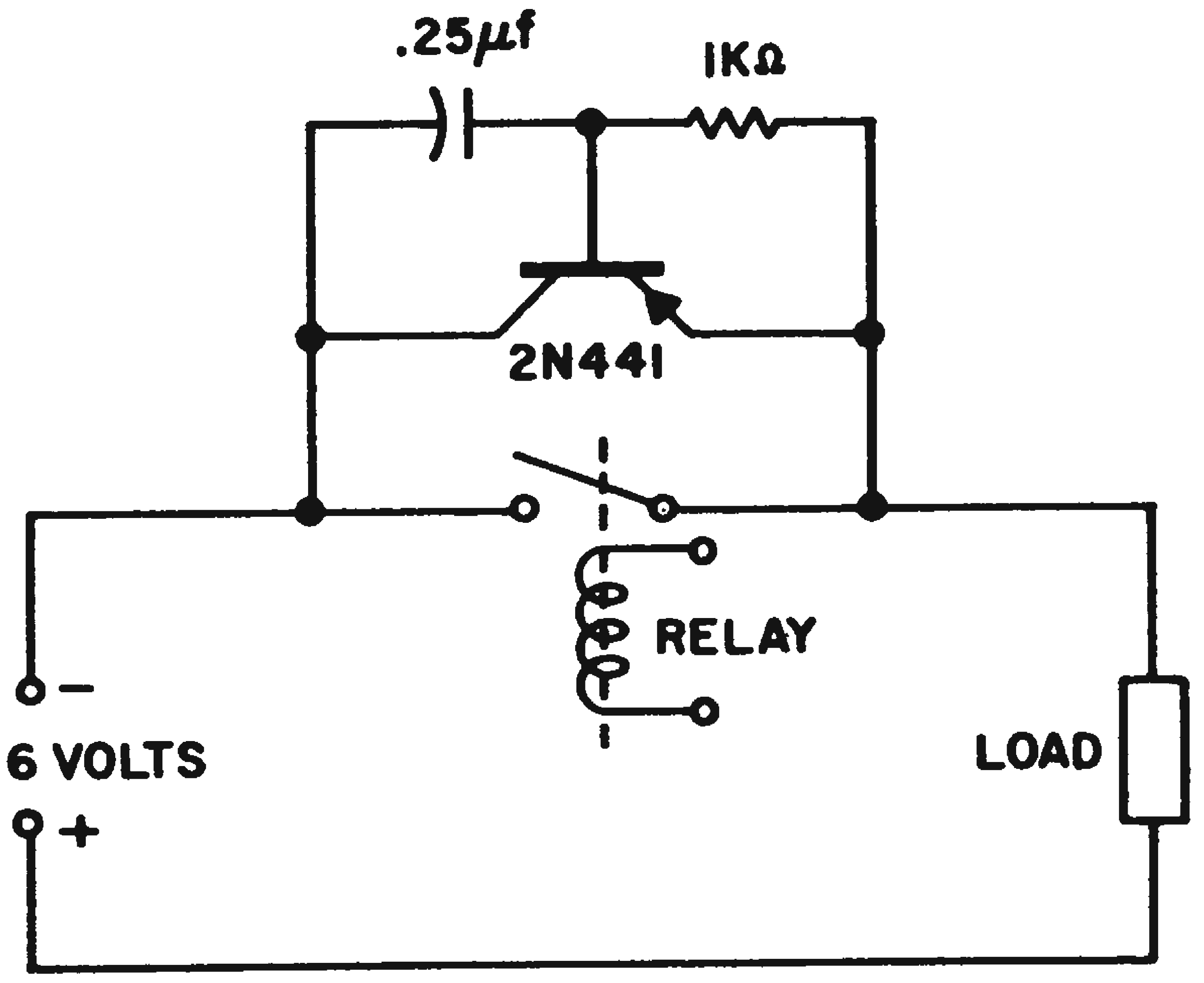

The transistor-capacitor combination helps to more completely suppress arcing when the relay contacts are opened.

amplified by the transistor as shown in the figure, the pulse voltage dropped to about 12 v.

This arrangement requires that the transistor's current rating equal the circuit current and that its peak voltage rating equal the pulse amplitude. Also, the load must be insensitive to any transistor leakage current.

Marriott Dickey, Orinda, Calif.

Miller Effect Extends Relay Close Time

Use was made of the Miller effect to provide an extended time delay in a relay circuit.

A relay had to be closed, without any delay, by a positive pulse. The relay was to remain closed for an extended time. For long close times, very large values for resistance and capacitance were required when conventional RC timing circuits were considered.

In the circuit shown, the tube is held cut-off by the bias voltage $-E_c$. A positive input pulse charges capacitor C_1; the tube conducts and closes the relay. The relay remains closed until the capacitor C discharges through R. However, the Miller effect has increased the effective capacity by a factor of $1 + A$, where A is the amplifier gain. This serves to extend the relay close time, and allows the use of comparatively smaller RC values.

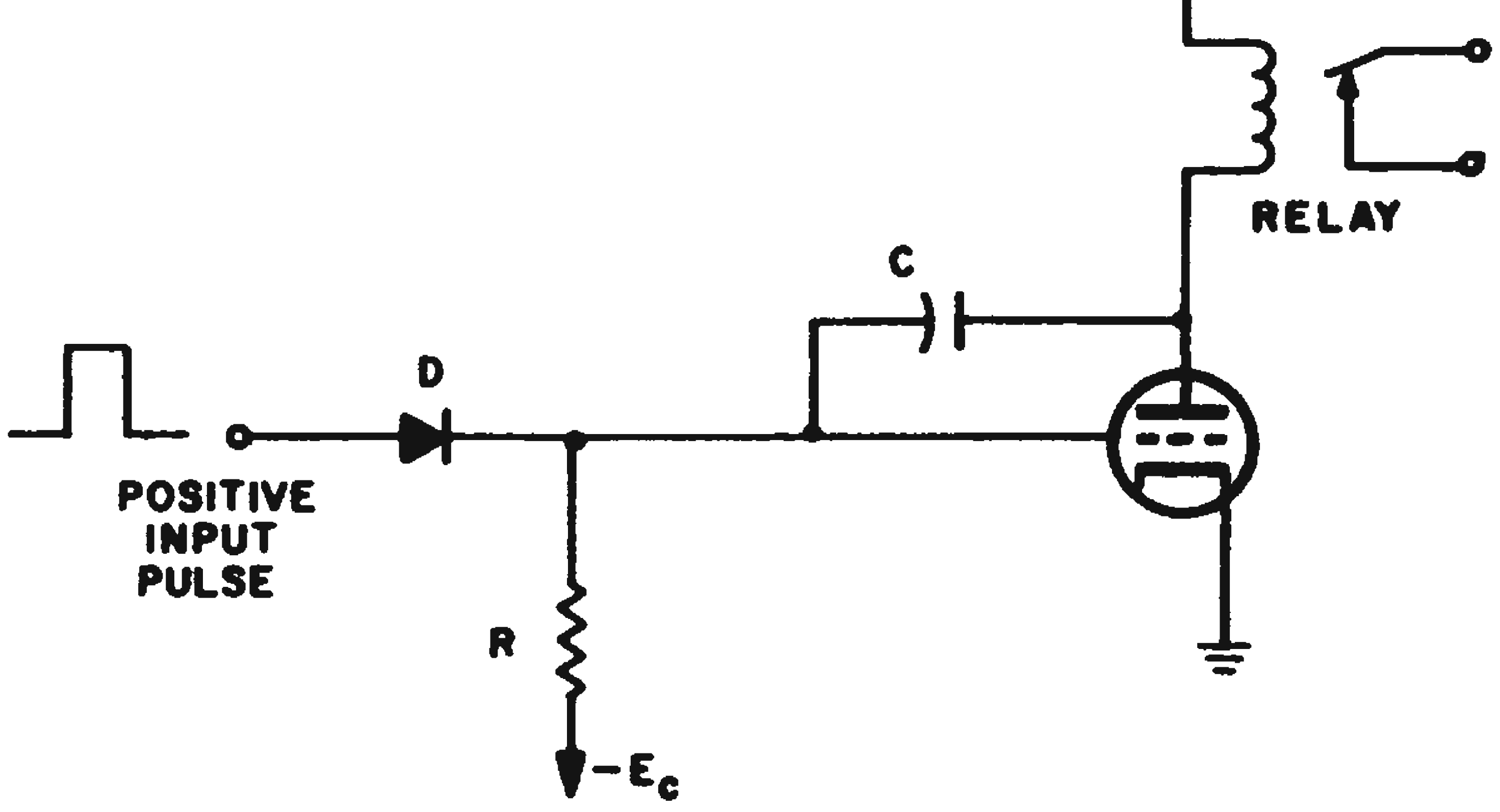

Miller effect is used to increase RC time constant and extend relay close time.

Richard Steinberg, Member of the Technical Staff, Hughes Aircraft Co., Culver City, Calif.

Triggering of Controlled Rectifier Fires Its Series Mate

A power supply circuit required two series pairs of silicon-controlled rectifiers.

The circuit had to be simple and yet insure accurate voltage sharing over the entire control range, without the necessity for trimming.

The circuit shown, designed for a 350 vdc-16 amp power supply, met these requirements very simply and easily. It provides very nearly equal division of voltages before firing and in all other respects behaves like the usual bridge circuit.

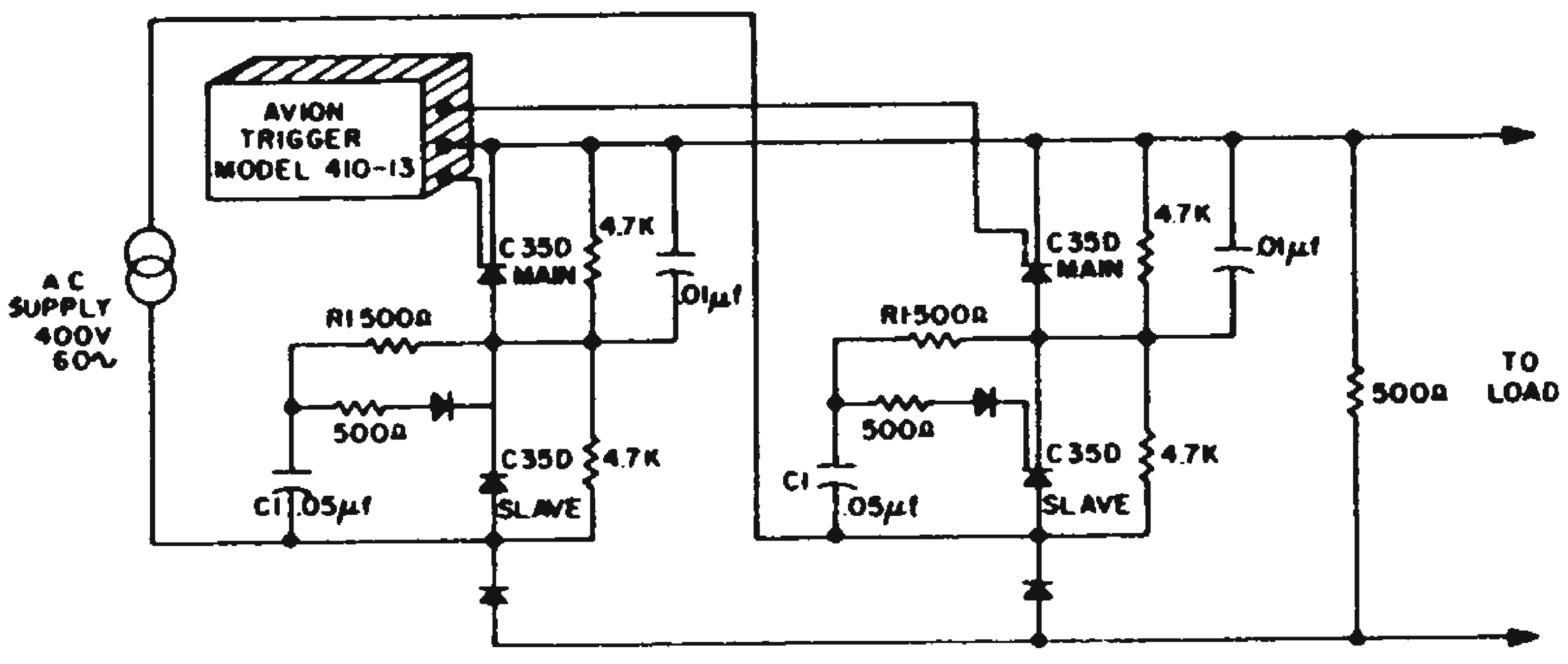

The "main" controlled rectifier is fired by the trigger, a pulse is passed on to its series "slave," and it also fires.

An Avion 410-13 trigger drives the two main control rectifiers exactly as in a conventional circuit. The "slaved" rectifier, that is, the one in series with the main devices, receives a firing pulse from the high-pass filter C_1 and R_1. This pulse is generated whenever a main rectifier fires, since as this *CR* drops voltage the slave *CR* gains voltage. This voltage change causes a charging current to flow in the 0.05 μf capacitor in a direction to fire slave. This *CR* fires almost simultaneously with the main *CR*. In fact, it is not possible to tell from any measurments at the load that this circuit is using two *CR's* in series. The diode in series with the gate blocks a reverse polarity pulse which would otherwise appear at the gate when the other half of the bridge fires.

David W. Rodgers, Commercial Products Dept., Avion Div., ACF Industries Inc., Paramus N.J.

Resistor Eliminates VR Tube Oscillations

In a plate supply filter it is sometimes necessary to use a VR tube regulator shunted by a large capacitor. The capacitor is required because pulses of energy may be desired, as in a thyratron circuit, which cannot be supplied through the VR tube dropping resistor, R_1. However, since a VR tube and shunt capacitor form a relaxation oscillator, it is often assumed these cannot be used in parallel.

The relaxation oscillations occur because the VR tube, especially at low currents, has a small equivalent series resistance. The oscillations are eliminated by inserting a resistor R_2 in series with the VR tube sufficient to off-set the negative resistance component. In practice, this resistance, which actually may improve the regulation, is usually about 100 ohms. It is preferable, however, to use about twice the minimum resistance required and to raise the VR current by lowering the series dropping resistor.

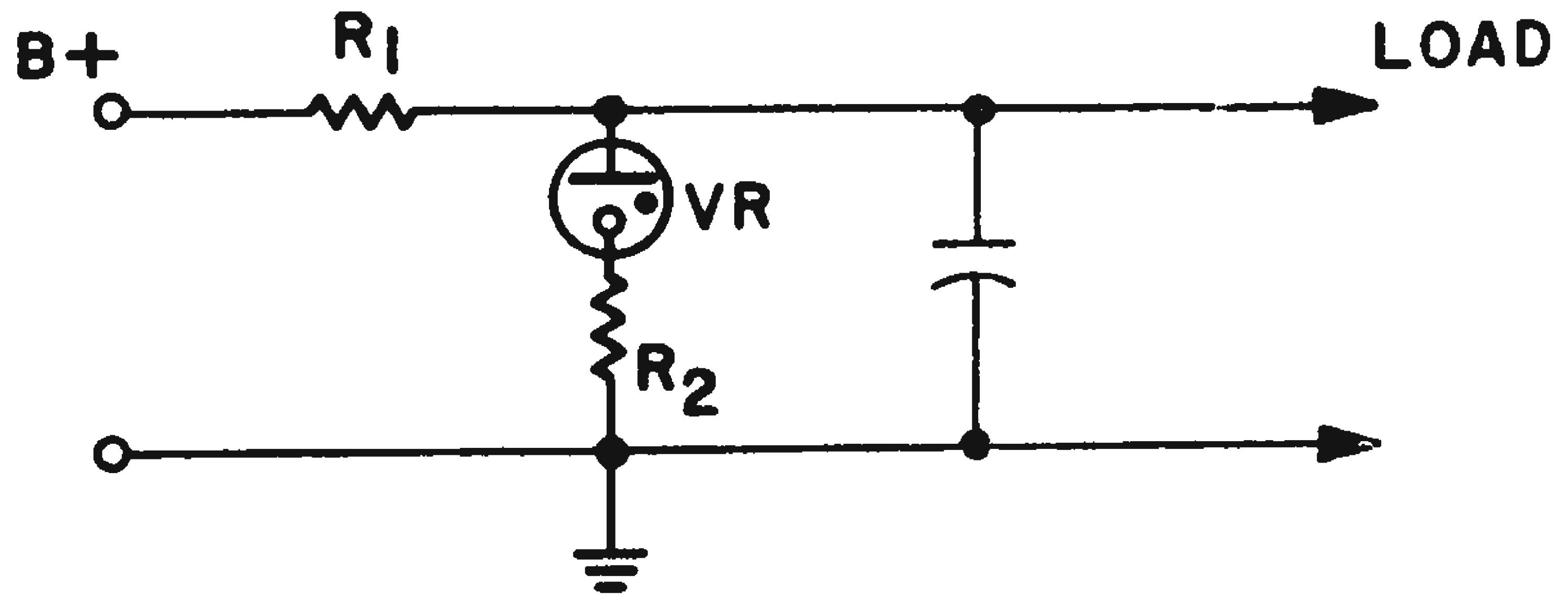

Lawrence G. Cowles, Electronic Design Engineer, The Superior Oil Co., Bellaire, Tex.

Neon Bulb Detects Phase Failure

At an unmanned fire station, the fire siren was powered by a three-phase motor. Occasionally, one phase of the supply line would fail and the motor become inoperative. The failure would be detected only when an emergency attempt was made to blow the siren or during the weekly test run.

To determine whether any of the phases had failed, sampling currents from each of the three phases were summed in a tapped resistor. An NE-76 neon bulb is driven by the voltage across this resistor. The tap is set so that the bulb just fires when all three phases are energized. If a phase fails, the voltage available to the bulb is only two-thirds as great. The close tolerance NE-76 then extinguishes.

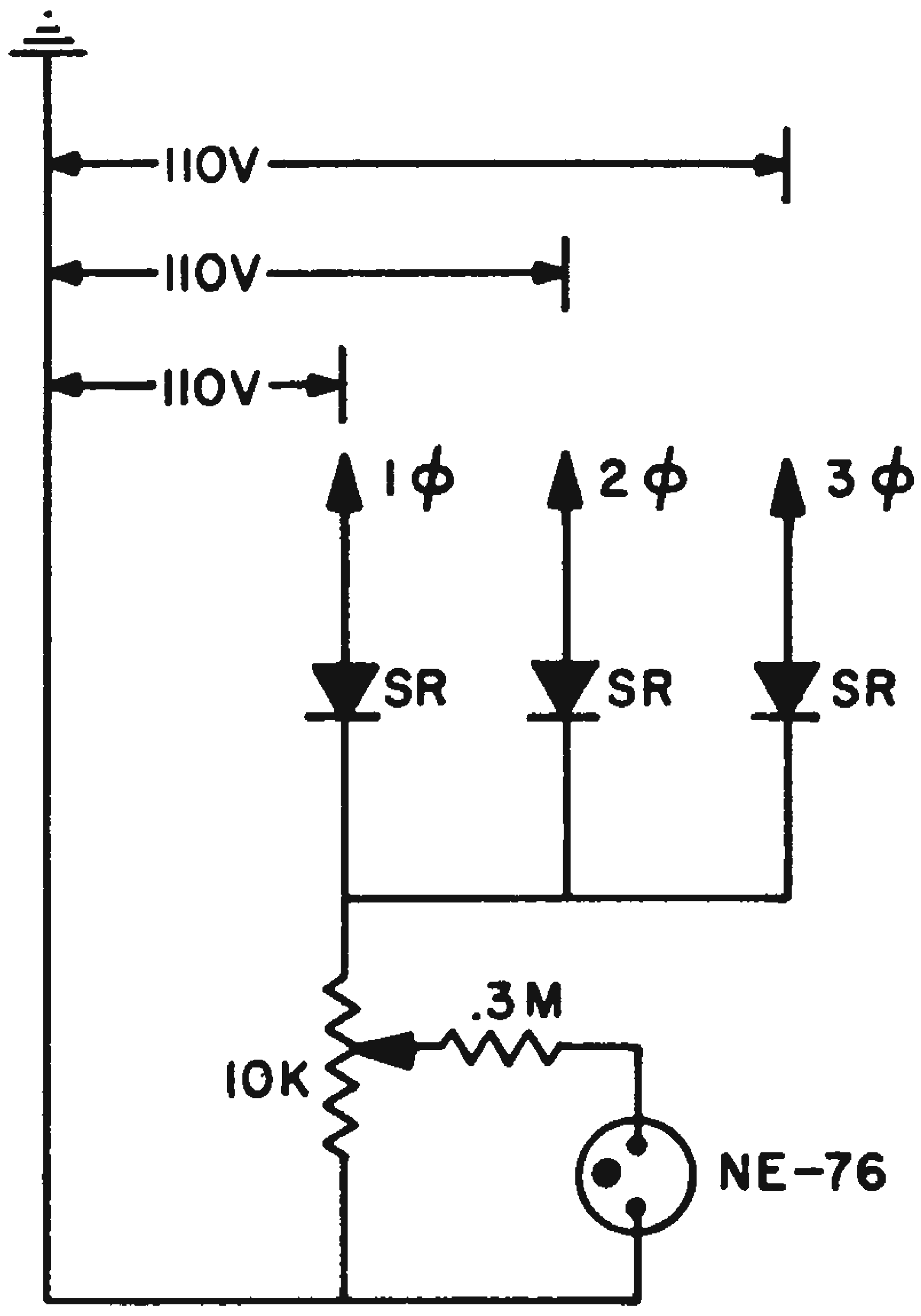

The pilot light containing the neon bulb was mounted on the outside of the building where it was checked by a guard on his regular rounds.

Louis E. Owen, Laboratory Supervisor, Goodyear Atomic Corp., Portsmouth, Ohio.

Tiny Thermistor Protects Gear Train From Transient Damage

A pair of synchros was used to transmit azimuth data for a special purpose analog computer. If the synchros were off null in their de-energized state and excitation was applied to the rotors, a large shock load was transmitted to the output gear train. This was causing excessive damage to the gears.

A mechanical solution to this problem would place a slip clutch in front of the output gear head. However, this would have required a complete mechanical redesign.

A simpler and more economical solution is shown in the figure. A thermistor was placed in

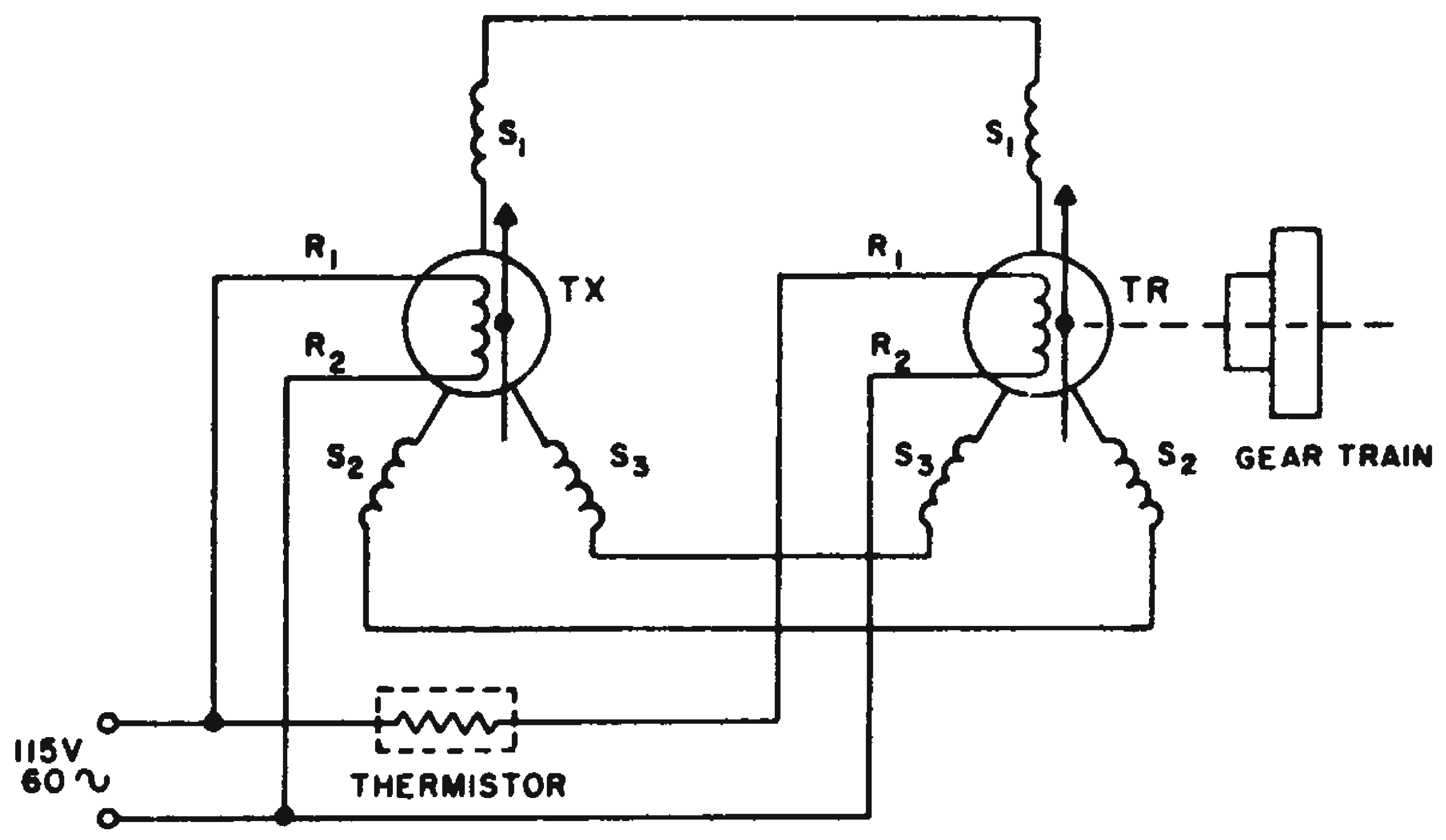

Thermistor inserted in series with synchro rotor prevents transient alignment torque from suddenly being applied to gear train.

the rotor leads of the torque receiver. When excitation is applied to the synchros, the thermistor is at first an open circuit. Gradually its resistance decreases until it becomes a virtual short with respect to the rotor impedance. This increases the torque of the TR gradually, instead of producing full torque immediately. Thus, the wear and tear on the output gears due to the transient condition were eliminated.

Jerome Lyman, Development Engineer, Servo Corp. of America, Hicksville, New York.

Neon Tube Limits Signals, Indicates Limiting Operation

A cheap, commercial type neon tube can limit signals and, at the same time, provide a visual indication of its limiting operation. In the particular circuit shown, a signal limiter was required for a class B push-pull servo amplifier to prevent the output stage from being overdriven. Resistor R_2 is chosen so that, with the neon tube ignited, the voltage difference across *AB* produces the maximum acceptable signal to the output stage grids. The waveform across *AB* is a clipped sinusoid, with its plateau at the neon tube conduction potential. The initial pip which is also present was, in this application, unimportant.

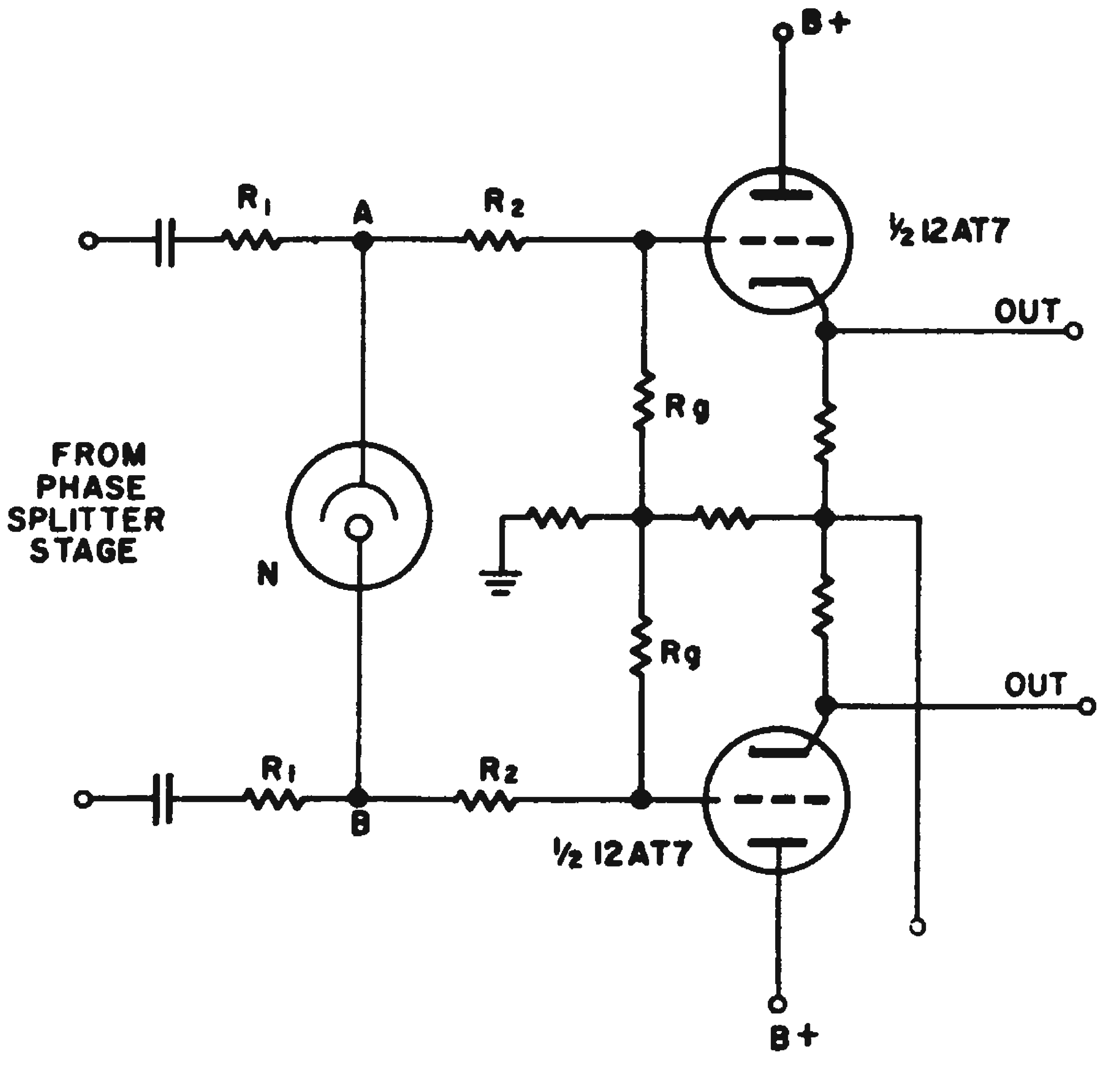

Neon tube limits symmetrical input to Class-B push-pull stage.

Andrew S. Williams, Senior Electronics Engineer, Stromberg Carlson Co., 1400 N. Goodman St., Rochester 9, N.Y.

A Cadmium Sulfide Photocell Indicator

The circuit shown is a photocell indicator for use in a burglar alarm system. It was designed to avoid the use of dc amplifiers.

Element *T* is a Hupp CdS, class 2 cell, and varies the frequency of the free running multivibrator in accordance with incident light variations. Fully illuminated, the oscillator produces a pulse train with about a 15% duty cycle. When the beam of light is broken, the duty cycle changes to 60-65%. Q_3 is an amplifier which drives the output emitter follower Q_4. The relay is normally energized, but opens when power fails or the light beam is broken. The 25-µf capacitor smoothes the pulses on the relay coil. With a small focusing lens, the device operates well with an ordinary 2-cell flashlight over 200 ft away, even in the presence of rather high ambient light.

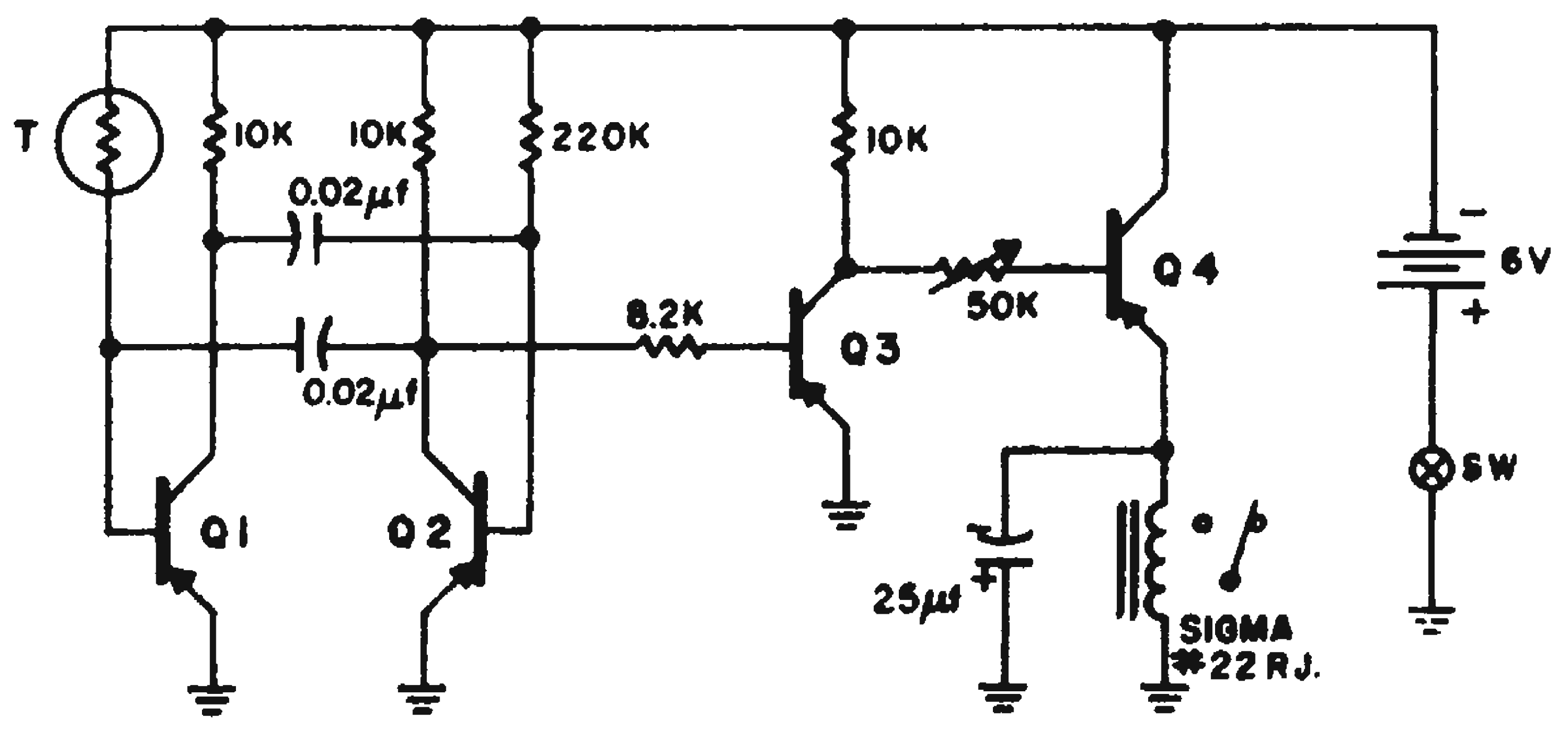

John Porter, President, Portronics, Inc., Tarzana, Calif.

Choke-Zener Diode Combination Reduces Regulator Ripple

We wanted to reduce the ripple voltage in a simple, emitter follower voltage regulator, without using bulky capacitors or heavy line chokes.

We did it by placing a small choke in series with the resistor *R*. The ripple voltage across the Zener diode is then attenuated by a factor $\frac{R_z}{\omega L + R + R_z}$, where R_z is the dynamic resistance of the Zener and ωL is the impedance of the choke. The regulated output voltage follows the

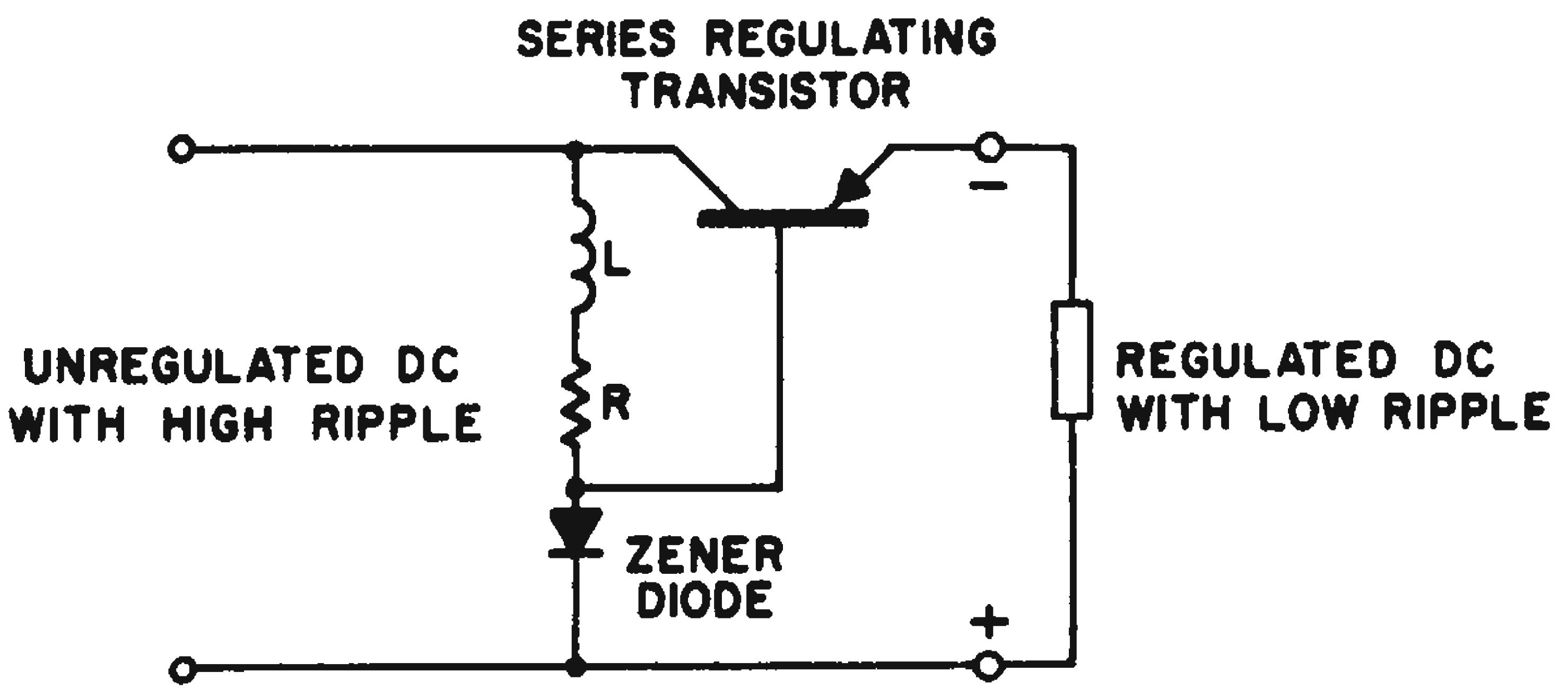

A choke-Zener diode combination reduces the output ripple in this emitter follower voltage regulator.

Zener diode voltage, resulting in a very low output ripple.

Note that the resistance of the choke becomes part of resistor R, and that the choke carries only a fraction of the load current.

Matthew E. A. Hermans, Project Engineer, The Western Union Telegraph Co., New York, N. Y.

Square-Loop Core Transformer Protects Regulating Transistor

A transformer with a square-loop core was used to protect the regulating transistor in a regulated power supply. Basically, transistor regulated power supplies use a transistor in series with the load whose collector-to-emitter impedance is changed to compensate for load variations. If the regulated output is shorted, the entire unregulated output appears across this transistor. Where the unregulated output is greater than the transistor breakdown voltage, the transistor can be permanently damaged.

The position of the regulator "isolator" is indicated in Fig. 1; its circuit in Fig. 2. While this basic circuit has previously appeared in the literature (Shea, R. F. "Transistor Circuit Engineering", John Wiley & Sons, p 422), the particular application described here is new.

If a short is placed across the output terminals *3-4* (assume *T1* is conducting), the square-loop core material will immediately be saturated by the increased collector current. This current is limited by the base drive provided by windings N_a. Since E_s is constrained to be zero by the short, and since $E_s = -N_s d\phi/dt$, $d\phi/dt = 0$. The voltage induced in N_a will go to zero since it also is a function of $d\phi/dt$. Since the base drive is now zero, ideally the transistor's input impedance should be infinite. Actually, since the collector to emitter voltage becomes large (equal to the regulated voltage) some current will be drawn. However, the previously troublesome load short has been converted to a high impedance. The regulating transistor is in no danger of having an overload voltage placed on it.

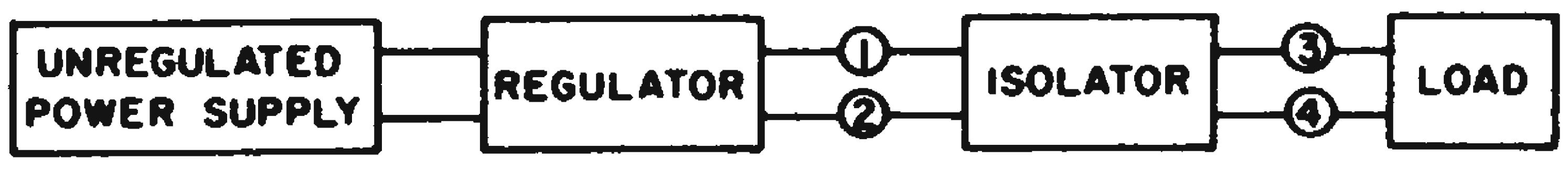

Fig. 1. Isolator is placed between regulating transistor and load.

Resistor R_1 across the regulator output is usually needed since the near no-load condition during shorting is too stringent a design requirement on the regulator. The base resistor (R_b) is selected for the desired bias point during normal operation. A value of 40 turns for N_p and 6-8 turns for N_a has been successful; with N_s determined by the output level desired. The transistors are determined by the power to be handled and the fact that the breakdown voltage should be about 240 per cent of the regulator output (twice the regulator output plus switching spikes).

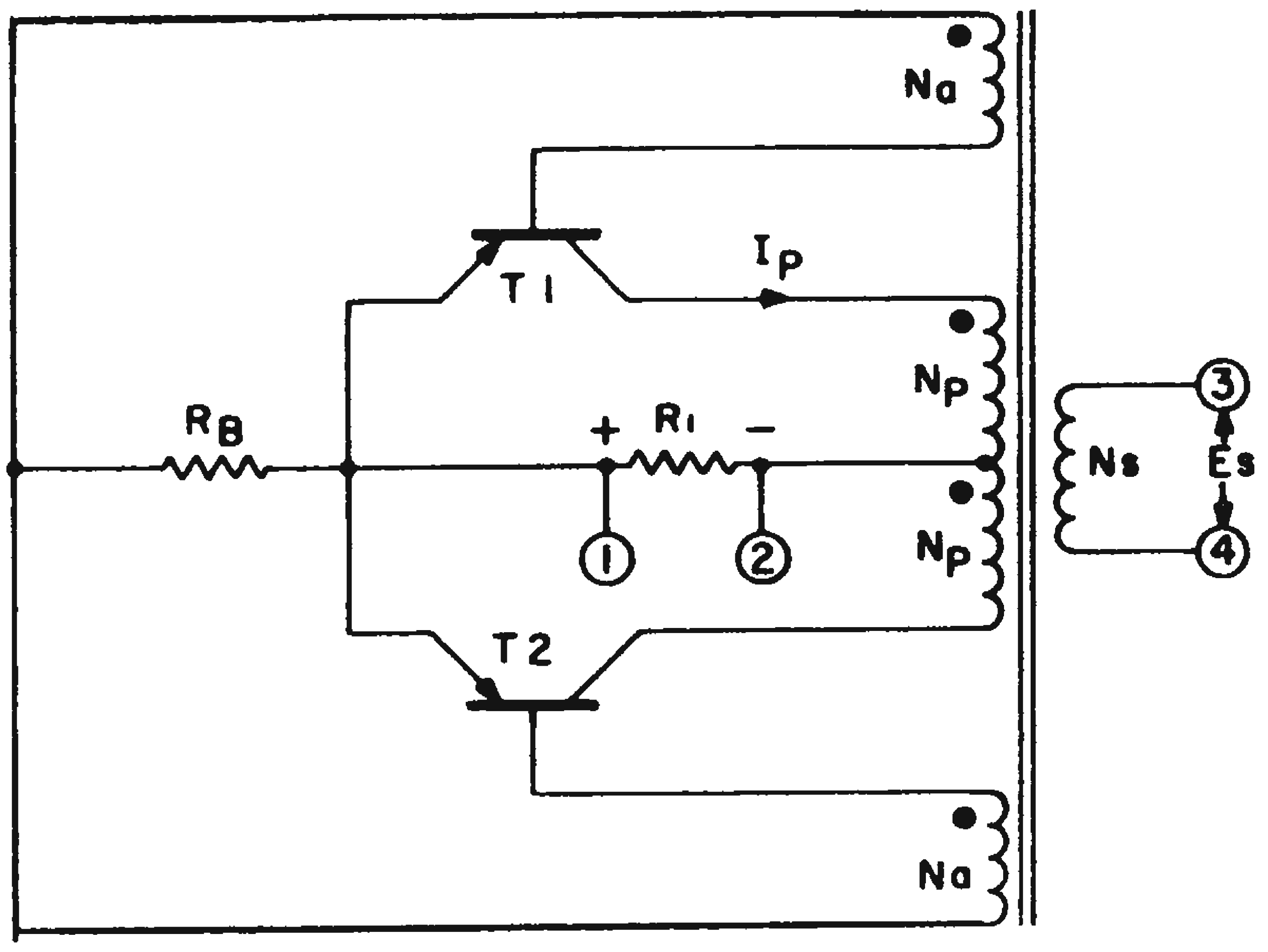

Fig. 2. Square-loop cored transformer causes short circuit at load to appear as a high impedance in series with regulating transistor.

Stanley Sokol, Design Engineer, Ford Instrument Co. Bldg., 4722, Rm. S9, Redstone Arsenal, Ala.

Oscillator Coil Doubles As Step-Up Transformer

By incorporating an output winding on the oscillator coil of a depth-sounder unit to serve as the coupling device between the transducer and first amplifier, improved circuit performance at low cost is achieved.

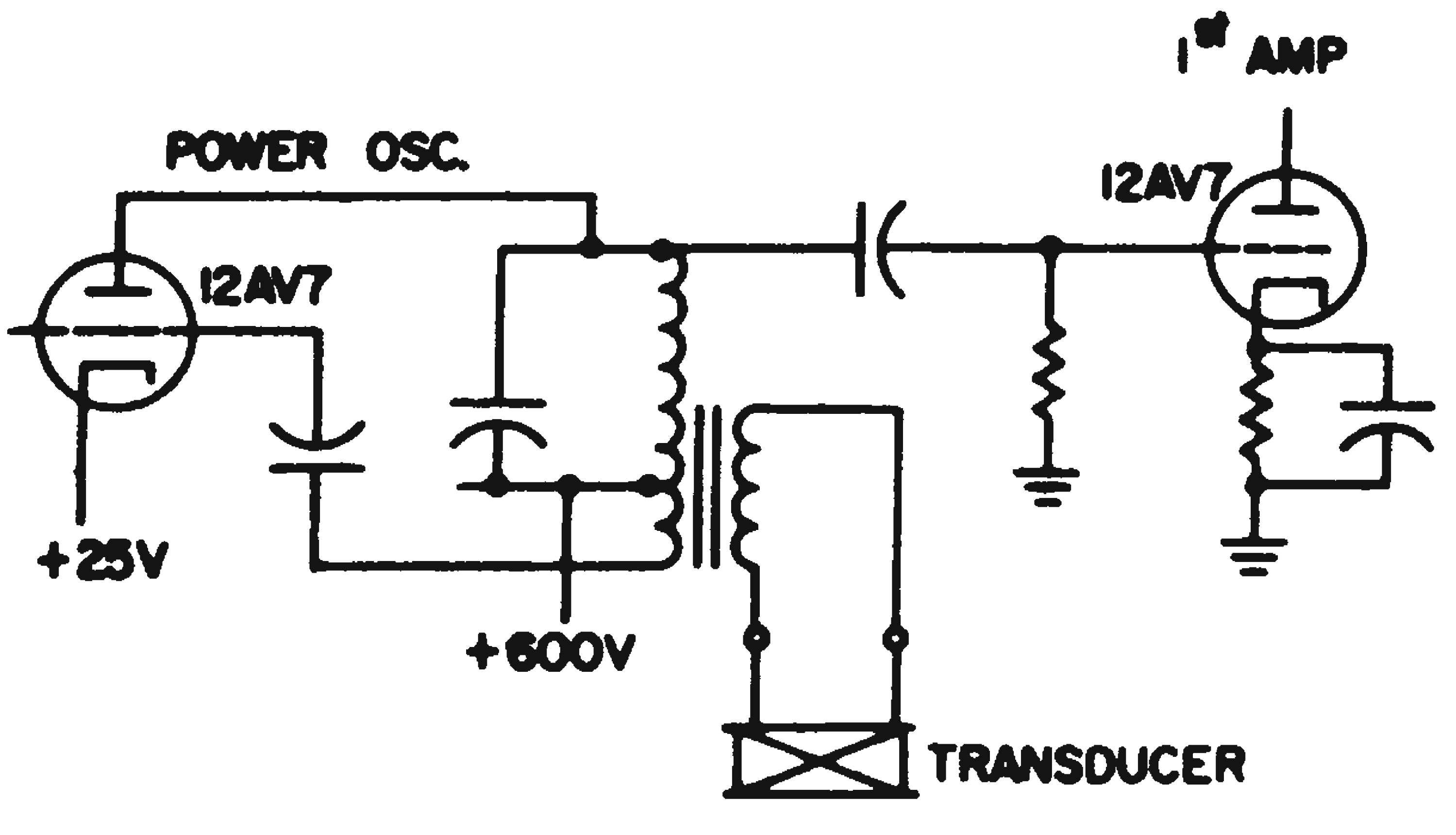

Transducer output gets boost of 10db by coupling to amplifier through oscillator coil.

Rather than couple the return signal from the transducer to the first stage directly, the signal is fed through the oscillator transformer having a step-up ratio of 3:1. Thus, a 10 db increase in signal level is obtained with no further parts other than a dc blocking capacitor between the coil and first amplifier grid.

Herbert C. Single, Marine Sonics Section, Raytheon Co., Waltham, Mass.

Predetermined Input Level Cuts Off Transistor, Sets Output

A simple circuit was required that would recognize a predetermined voltage level. An ordinary cathode-coupled binary could not be used because a positive output signal was desired during the time the chosen level existed, while at any other level the output had to be nearly zero. The circuit shown accomplishes this easily.

The reference is the negative of the level to be recognized. Thus the voltage at *A* becomes zero when the input and reference are equal. When these voltages are unequal, the line is either positive or negative.

A net positive voltage causes the transistor to conduct by raising the base voltage. A net negative voltage lowers the emitter voltage so that the output voltage is nearly zero. When input is at the reference level, the transistor is cut off, and the output voltage rises to the desired positive voltage level.

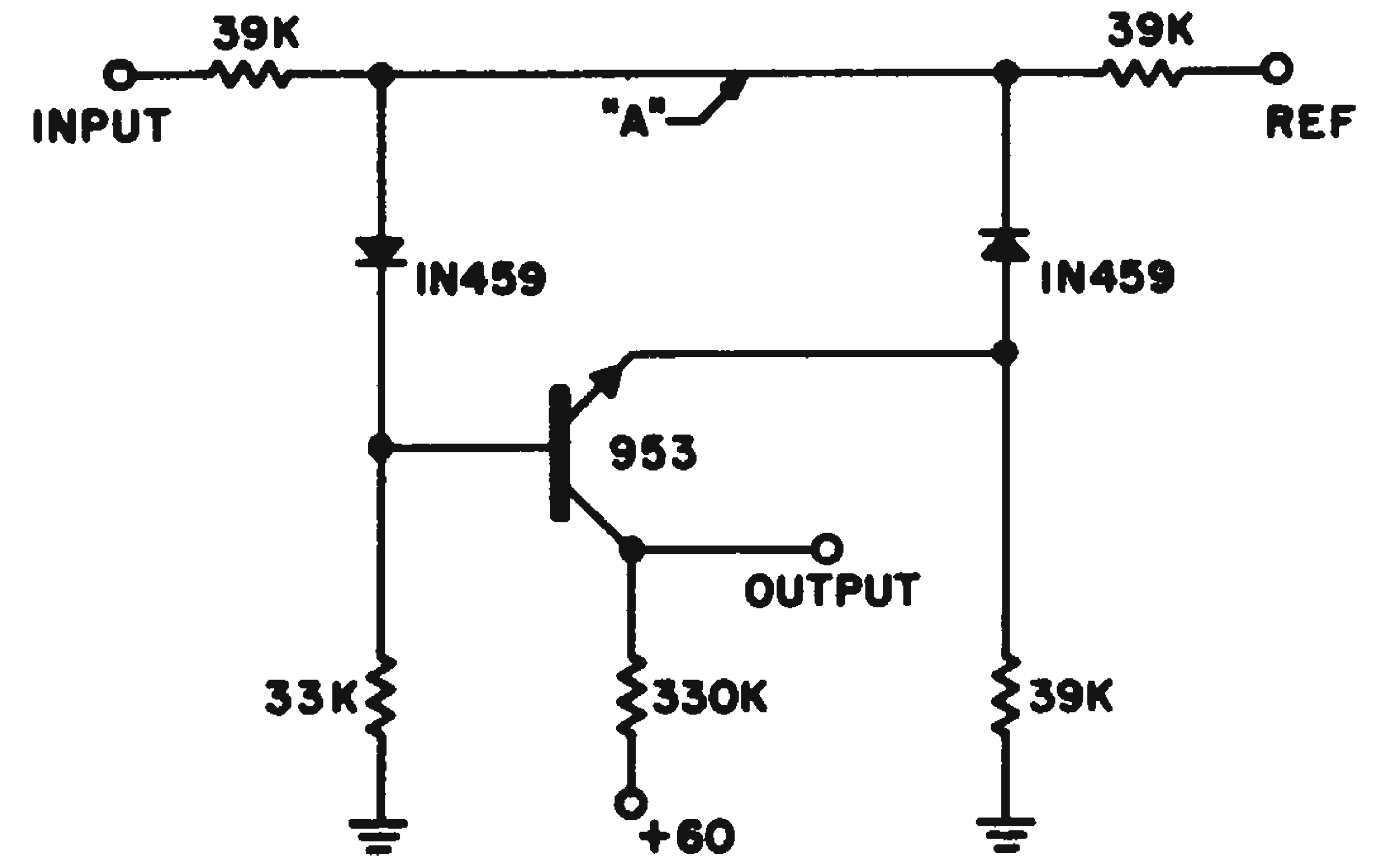

When input voltage is at the reference level, voltage at *A* is at zero, transistor is cut off and output rises to the supply voltage level.

Lloyd E. Weberg, Senior Engineer, Military Electronics Div., Motorola, Inc., Phoenix, Ariz.

Biased Transistor Pair Monitors Within Set Limits

We needed a voltage level detector to provide an output when the input was between two preset limits. The detector we designed used two transistor pulse amplifiers connected as shown in the figure.

Each transistor was back-biased to one of the desired reference levels. Thus, there would be an output between the two collectors only when the input signal was between the reference voltages set by the emitter biases.

As an example, assume that an output is to be provided when the input is between −1 v and −2 v. When the input is in this range, transistor 2 will be cut off. However, transistor *1* will deliver a current pulse through the load. If the input is greater than −2 v, the collectors will rise and fall in phase, and no load current will be provided.

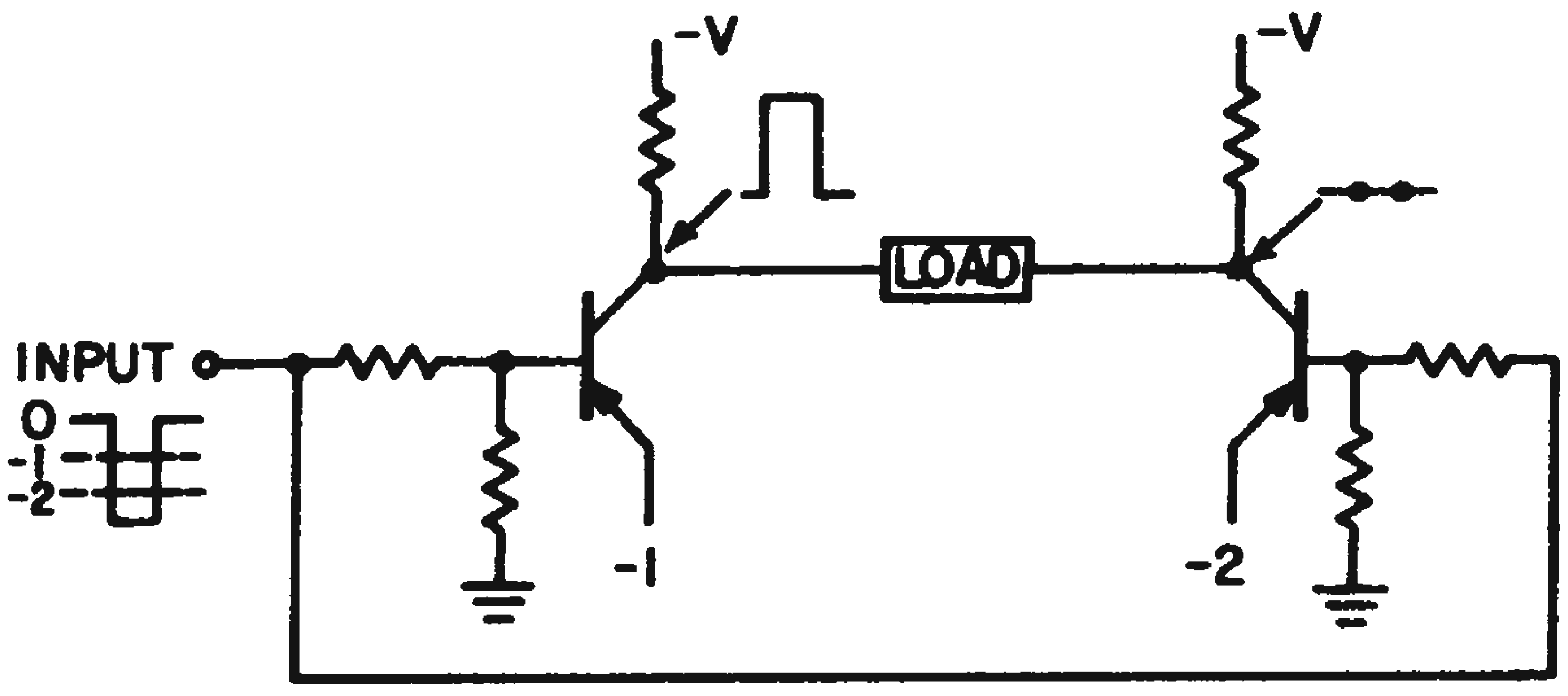

Level detector provides output only when input level is between levels set by emitter voltages.

Joe Klarl, Development Engineer, Motorola, Inc., Chicago, Ill.

Transistorized Output Switch Limits Short-Circuit Current

Transistorized switches are useful circuits, but when their loads are subjected to frequent short circuits, the circuits can be troublesome and they require protection. The circuit shown here limits the output current in a half-ampere switch to about 1 amp.

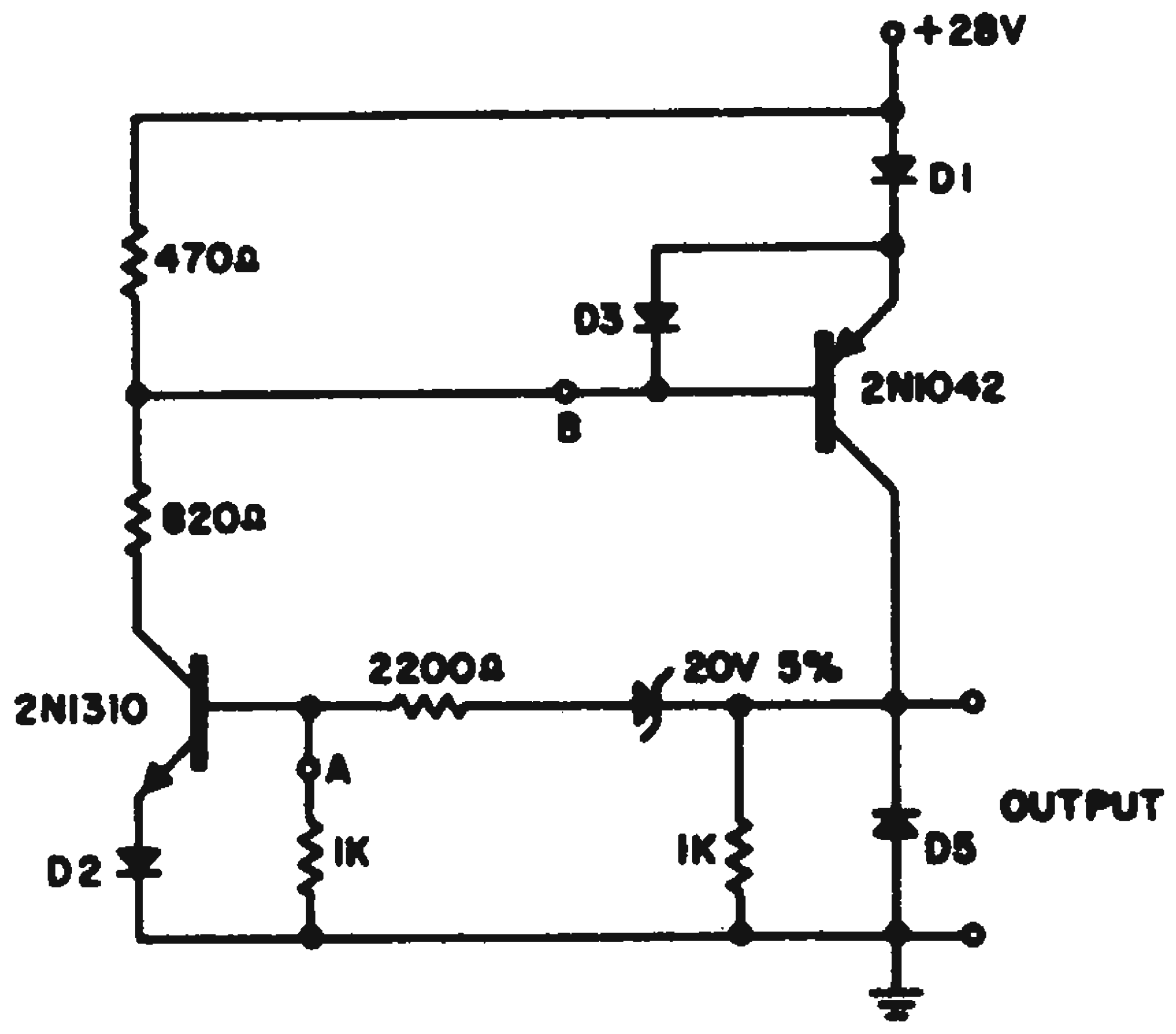

Half-ampere output switch limits short-circuit to safe, 1-amp value.

The circuit is a modified all-on—all-off flip flop. *D1* and *D2* are silicon diodes which back bias the transistors during their *off* state. They may be eliminated if silicon transistors are used. *D3* is a silicon diode which causes several volts to be dropped across the output transistor when its current exceeds approximately 1 amp. Whenever an excessive load causes the output to approach the voltage of the Zener diode *D4*, the circuit reverts to the *off* state.

A positive trigger at *A* or a negative trigger at *B* will turn the circuit on. A negative trigger at *A* or a positive trigger at *B* will turn the circuit off. If the duration of the *on* trigger pulses is limited to the order of a millisecond and the trigger pulses duty cycle is kept low, no damage will result from triggering even when the output remains shorted.

The device may be turned on and off by a trigger coupled from an isolation transformer, thus making it practical to employ several such devices, each operating from its own power supply, to have isolated grounds.

James G. Barr, Senior Engineer, The Martin Co., Denver, Colo.

Feedback Helps Flip Output of Zero-Crossing Detector

One of our designs required that we obtain a pulse each time a 400-cps sine wave crossed the zero reference, going negative. The pulse had to have a fairly fast rise time in order to trigger a flip-flop within 1 µsec of the zero crossing.

We used the modified voltage comparator shown in the figure.

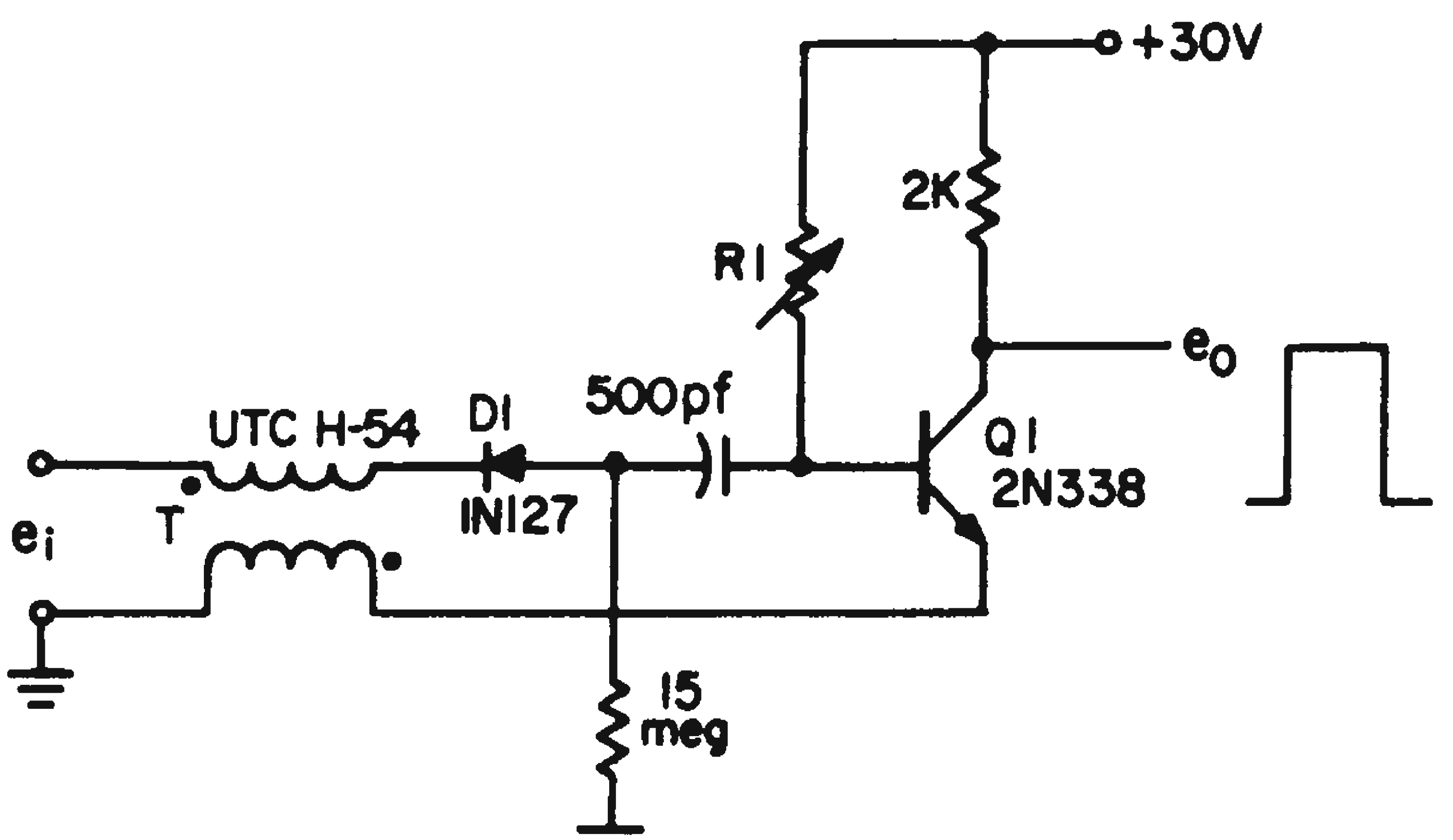

With input crossing zero and going negative, diode *D* is forward biased and transistor Q_1 begins to cut off. Cut-off is hastened because emitter pulse is fed back to base through pulse transformer. Fast rise time pulse results at output.

Transistor Q_1 is biased on, almost to the saturation point. As long as the input voltage is positive, diode D_1 is reverse-biased and the transistor continues to conduct.

As soon as the input reaches zero going negative, the diode is forward biased and the transistor begins to cut off. This change in emitter current is coupled back to the base through pulse transformer *T*. Since the feedback is negative with respect to the emitter, Q_1 is cut off further. The result is an output pulse with a fast rise time. Its amplitude can be adjusted by changing the value of the bias resistor R_1.

William D. McCulley, Electronic Engineer, U.S. NOTS, China Lake, Calif.

Separate Lamps Controlled Over Single Line

Four separate lamp circuits can be remotely activated over a single control wire by using the rectifier arrangement shown in the figure. The circuit uses the four possible combinations of phase and polarity that can be obtained by half-wave rectification of the ac line. Relative polarity of the 115-v source and the "remote" 85-v lines are indicated by the plus and minus signs.

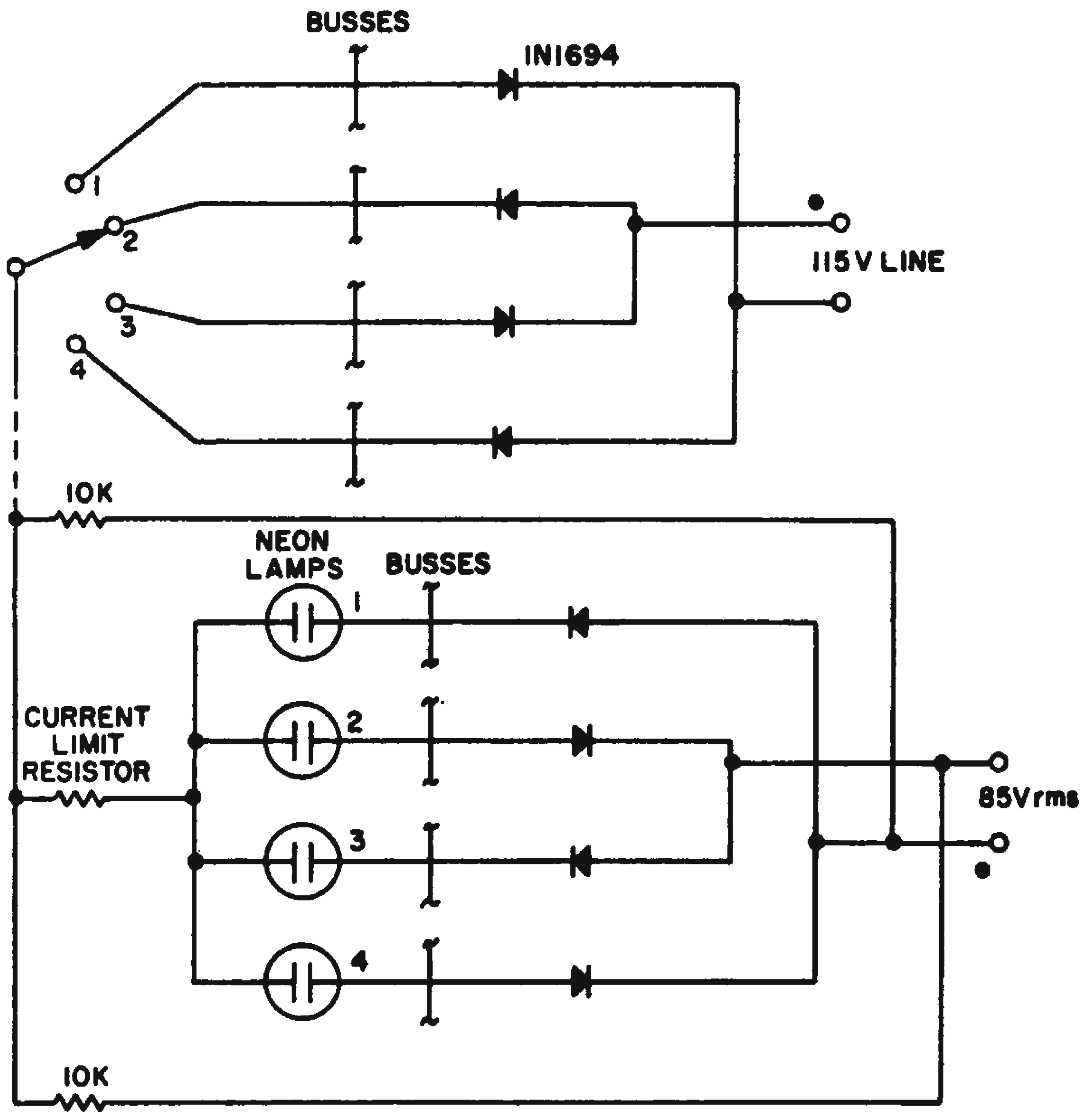

Four (or more) remotely located lamps can be controlled over a single interconnecting line.

The desired bulb can be lighted by connecting the control wire to the corresponding switch position. Firing of more than one lamp is prevented by reducing the remote ac voltage to about 85 v rms. The 10-K, 2-w resistors connected from the control wire to the 85-v supply help to minimize the effect of stray control line capacity which could cause improper lamp firing.

It is possible to extend the circuit so that more than four lamps can be controlled. One control wire is required for every four lamps, with the same eight diodes sufficient for all lamps. Also, relays can be substituted for the neon lamps.

Note that, with appropriate switching, several lamps may be energized simultaneously. Thus, a binary coding may be employed, with decoding accomplished by using diode AND circuits, relays, etc. In this way, 15 functions may be switched over a single control line.

K. C. Herrick, System Engineer, Reflectone Electronics Corp., Stamford, Conn.

Photoelectric Circuit Operates With High Light Resolution

In many applications of photoelectric controls, it is desirable to obtain a change in output current for a very small percentage change in light at the detector. These applications might include burglar alarm systems and industrial proximity controls. The circuit shown affords a direct and inexpensive method for obtaining this type of action.

The circuit is designed so that a change of output current I_2 approaches the change in photocell current I_1 times the product of the β's for the two transistors. However, biasing current, I_3, allows quiescent current, I_2, to be set at some nominal, below-saturation level even in the presence of a relatively high ambient light level at the photocell.

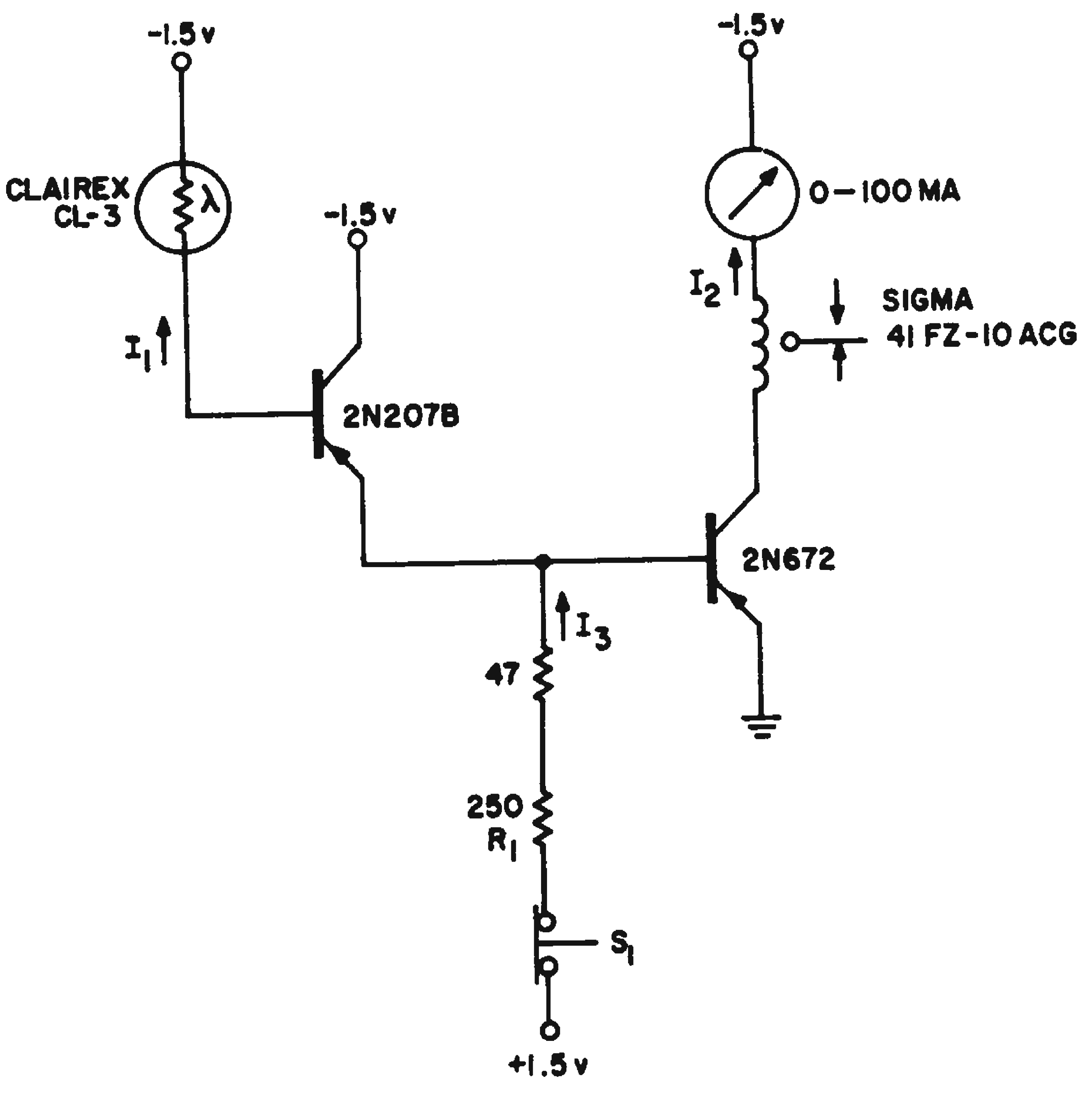

High-resolution photo detector circuit does not require more elaborate differential amplifier techniques.

A type of "suppressed-zero" operation is obtained, giving high light resolution without a more elaborate differential amplifier.

For burglar alarm type of operation R_1 is decreased so that I_2 is just sufficient to hold the relay in. A very small decrease in light input then will drop out the relay (fraction of a foot-candle change causes 20-ma change in I_2). By momentarily depressing S_1 the relay is again pulled-in, resetting the system. The actual relay used in the low voltage dc circuit was a 6-v ac unit. Pull-in current is 80 ma; drop-out current is 15-20 ma.

E. S. Gordon, Research Engineer, Armour Research Foundation of Illinois Institute of Technology, Chicago, Ill.

Signal Light Indicates Out-of-Bounds Ripple

We needed a circuit, on a transistorized power supply, to detect and indicate rises of ripple voltage above the allowable 10 mv.

The circuit shown was chosen because we found it to be simple, reliable, and accurate.

The supply to be monitored is connected to the detector with the proper polarity. Capacitor C_2 isolates the ripple signal from the direct current. The signal is then stepped up by transformer *T1* which is tuned to the ripple frequency by capacitor *C3*.

When the peak ripple signal causes the current through the tunnel diode, *D1*, to exceed its full value, the diode will switch to a higher voltage. The autotransformer action of *T2* creates a larger voltage pulse on the gate of the silicon controlled rectifier, *SCR1*. This pulse turns both the controlled rectifier and the ripple light on. The value of ripple voltage at which this occurs is determined by the turns ratio of *T1* and the value of *R1*.

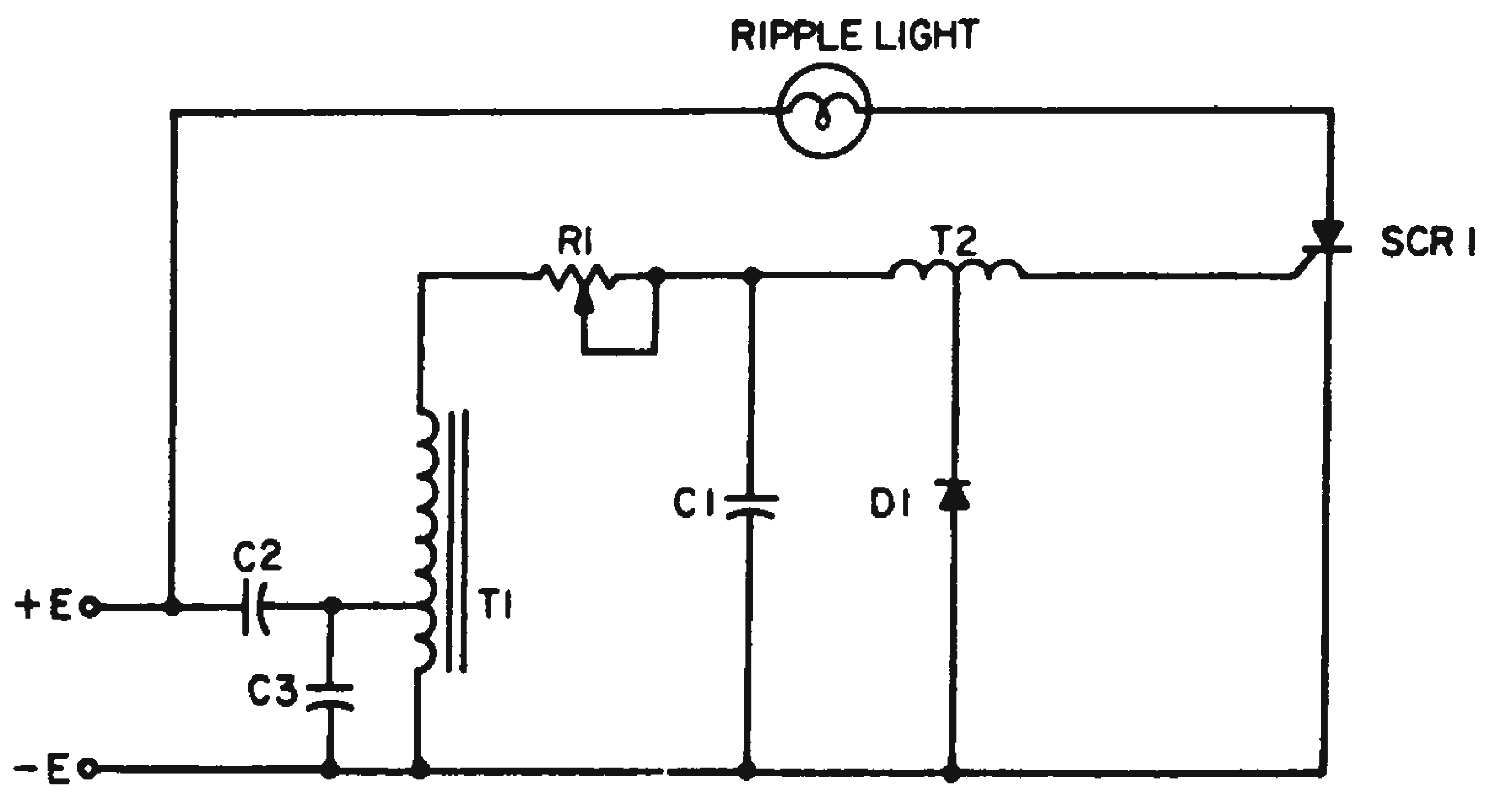

Amplified ripple voltage triggers silicon controlled rectifier which lights indicating light.

Capacitor *C1* is included to provide a low source impedance for the firing pulse to the controlled rectifier. Tuning *T1* with *C3* and including the *R1-C1* combination filters out and delays transient voltage pulses which could trip the *SCR*.

If desired, a reset switch can be placed in series with the light.

Bruce Hicks, Development Engineer, Universal Match Corp., St. Louis, Mo.

Temperature Monitor Uses Silicon Transistor Sensor

A temperature-monitor circuit considered for one of NASA's satellites made use of the base-emitter voltage change with temperature of a silicon transistor. The complete circuit, shown in the figure, was compact and very reliable, was stable with age and was easily designed for various output voltages and temperature ranges.

The primary design equation is:

$$I_c = \alpha \frac{V_b - V_{be}}{r_e - R_e} \qquad (1)$$

where V_b is the base voltage set by the base-biasing resistors,

V_{be} is the base-emitter voltage

To design the circuit, the cold-end point is determined and used in the expression for V_{be}. This is equal to V_b at the cold-end point,

$$V_b = 0.6 - 0.002\ (T - 20) \qquad (2)$$

The base-biasing resistors are then chosen to give the voltage found by Eq. 1. The slope of the current vs temperature curve is found to be, neglecting the effects of r_e:

$$\frac{\Delta I_c}{\Delta T} = \frac{0.002}{R_e}$$

Actually r_e is inversely proportional to emitter current, causing the nonlinearity at the low temperature end. Thus,

$$R_e = 0.002 \frac{\Delta T}{\Delta I_c} = 0.002\ R_c \frac{\Delta T}{\Delta V_o} \qquad (2)$$

where R_c is the collector resistor

V_o is the output voltage.

This circuit can easily be used with a current readout device simply by putting the readout device in the collector instead of R_c. The first part of Eq. 2 is then applicable.

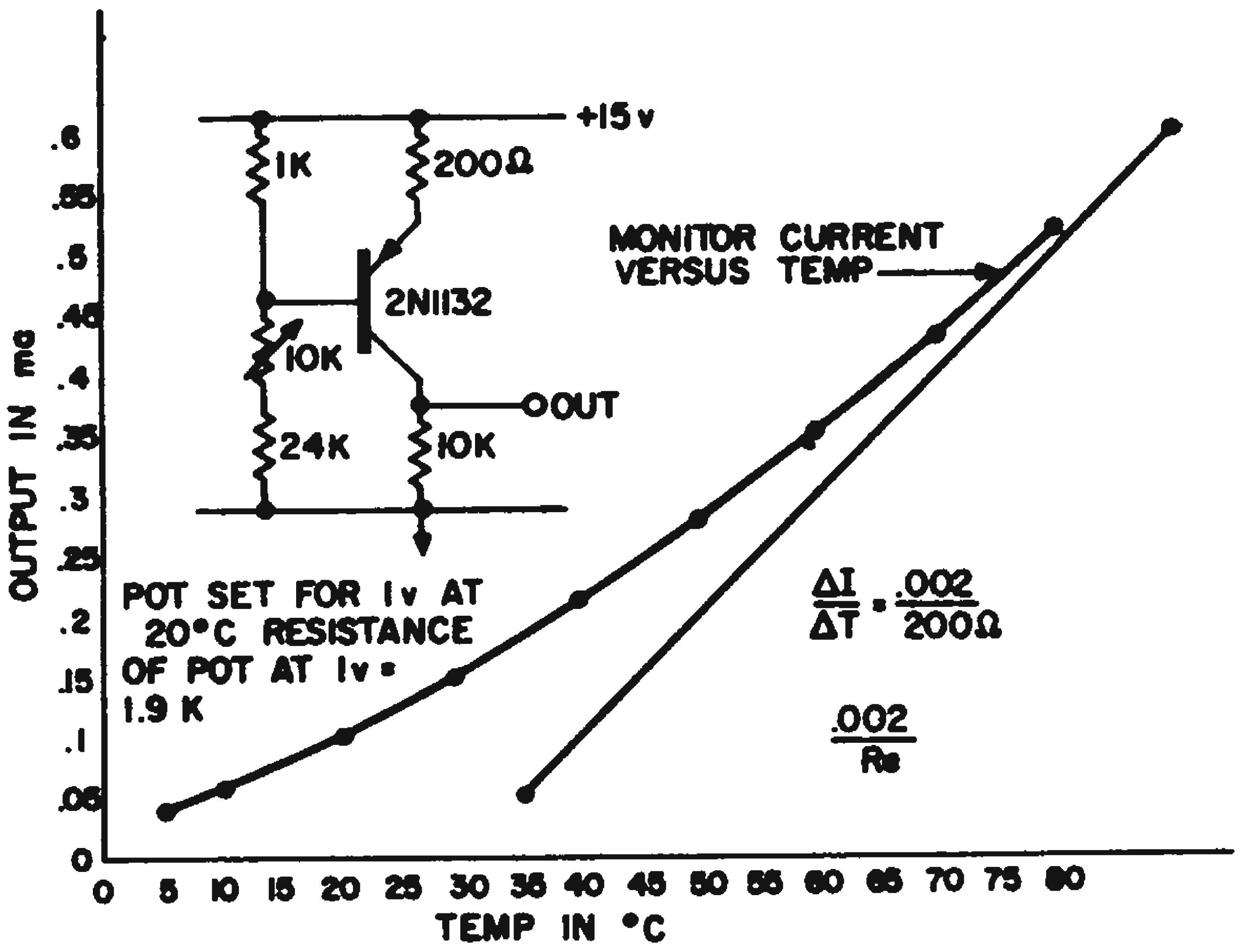

Temperature monitor makes use of the base-emitter voltage change with temperature of a silicon transistor. Plot shows circuit output-current dependence on the temperature.

W. H. Follett, Electronic Engineer, Ball Brothers Research Corp., Boulder, Colo.

Schmitt Circuit Monitor Triggers on Overloads

A simple overload alarm was needed to give a visual signal when the output of an amplifier exceeded a certain limit. The circuit shown was designed to work in the range of from 1 to 6 v rms.

Transistors Q_1 and Q_2 form a conventional Schmitt trigger with Q_2 conducting and Q_1 cut off. The emitter of Q_1 is at a potential determined by the current flowing in the common emitter resistor R_1. When the input voltage does not exceed this level, the alarm presents to the source a very high impedance (that of the reverse-biased base-emitter diode of Q_1). When the peak of the ac signal exceeds the emitter bias of Q_1, the circuit is triggered, providing a positive pulse at the collector of Q_2. This pulse is coupled to the one-shot multivibrator formed by Q_3 and Q_4. The alarm lamp is the collector load of Q_4 which normally is cut off. If the period of the one shot (determined by R and C) is chosen close to the period between successive peaks of the input waveform, the lamp will remain lit as long as the limit is exceeded and stay out at all other times. These sensitivity is about 10 mv.

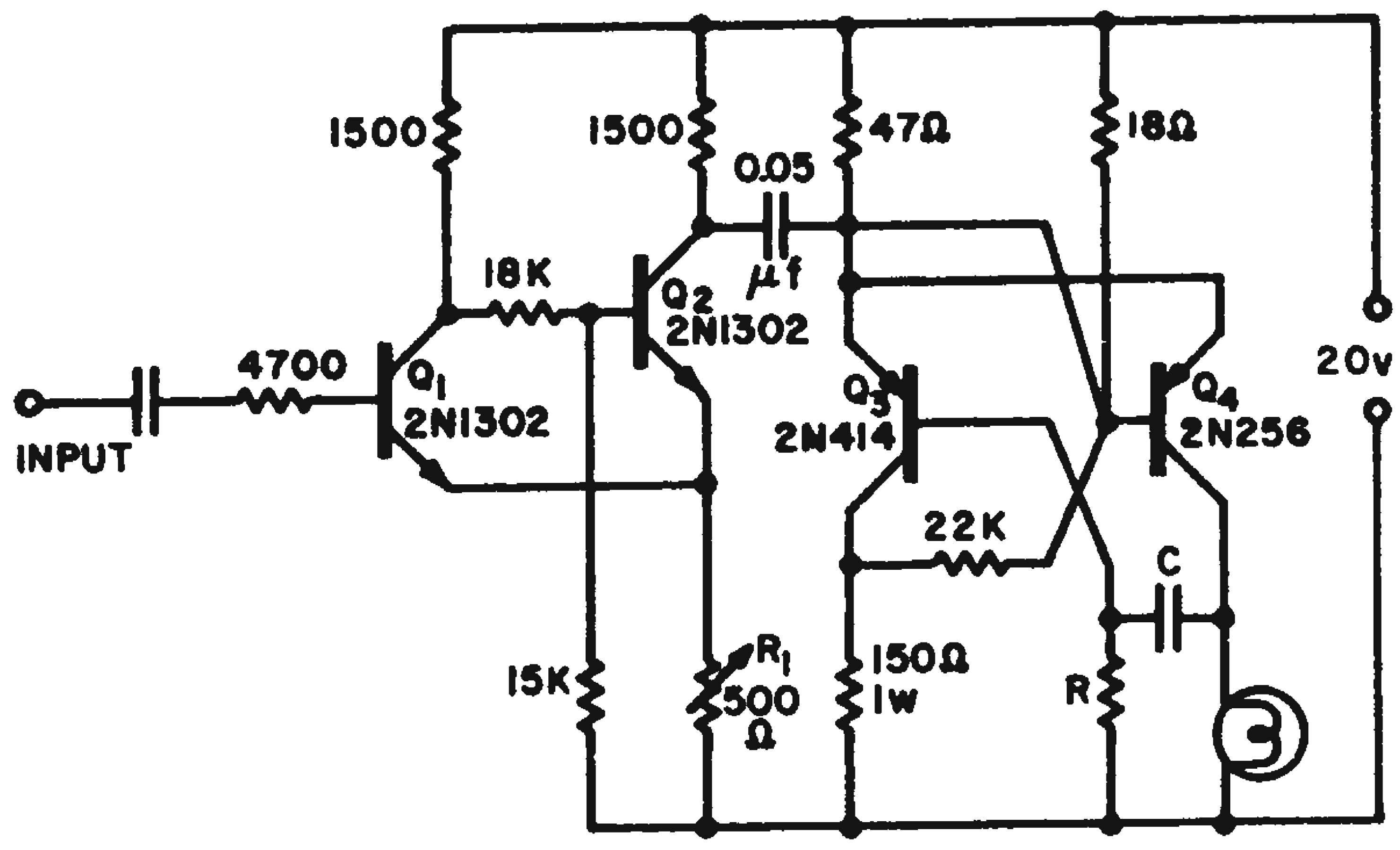

Overload alarm with 10-mv sensitivity uses Schmitt trigger circuit driving multivibrator.

Bill Gutman, project engineer, Kearfott Div., General Precision, Inc., Clifton, N. J.

Current Overload Protectors Use Simplified Designs

Many an engineer's face has turned as red as the anode of the power tube he was working with, when he glanced at the plate-current meter and observed that it was indicating much greater current than normal.

Although most modern tubes will not be severely damaged by a momentary overload, the problem is a constant threat to the engineer of high power equipment using expensive tubes and components.

Many commercial communications and broadcasting transmitters and other industrial equipment include automatic overload protection. These overload circuits are frequently quite complex.

In the simple protective device shown in Fig. 1, a warning light is turned on if excess current is drawn. The circuit requires only the addition of a paralleled relay and potentiometer (K_1 and R_1) in series with the filament or cathode return of the power tube. The potentiometer's value must be such that when paralleled with K_1, the voltage drop of the combination is equal to the pull-in voltage of the relay at the maximum current of the circuit. This can be computed by:

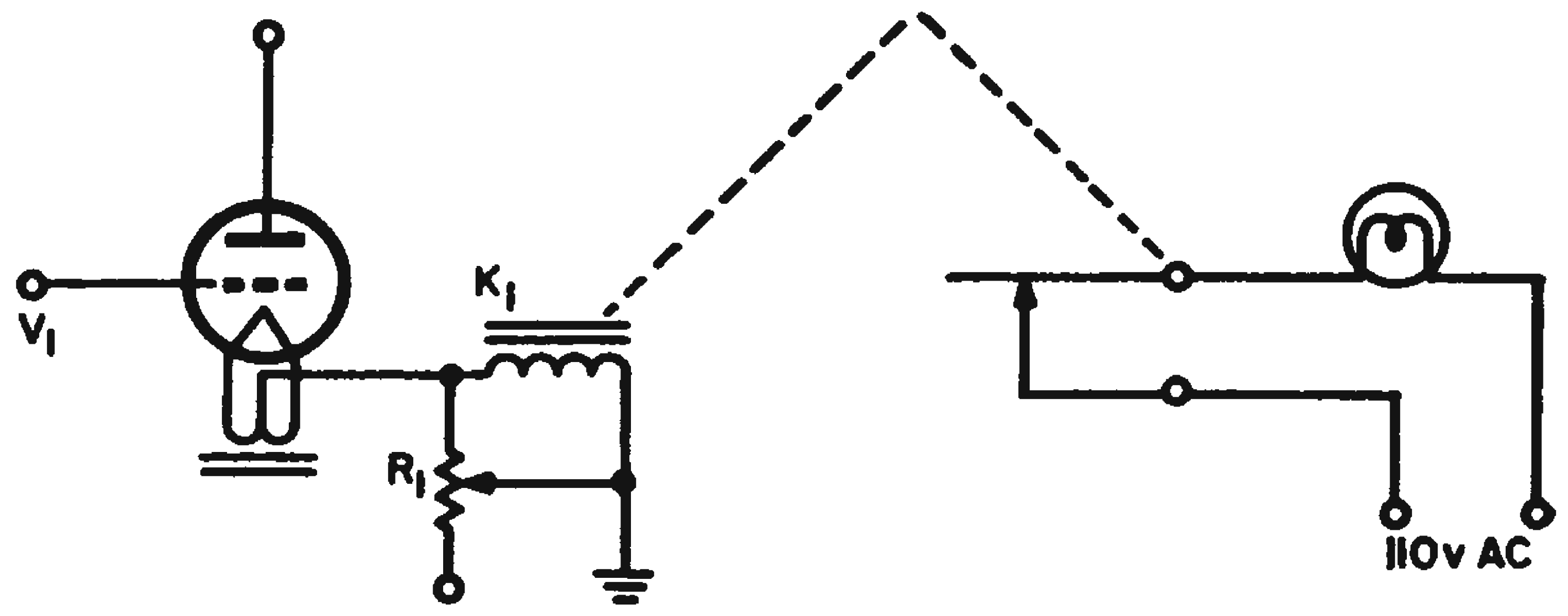

Fig. 1. Basic circuit provides indication of tube overload.

$$R_1 = \frac{E_{K1}}{I_{max} - \left(\frac{E_{K1}}{R_{K1}}\right)}$$

where: E_{K1} = operating voltage of relay K_1.
R_{K1} = dc resistance of K_1
I_{max} = maximum circuit current in amps.

For example, if a 24-v, 200-ohm relay is used, R_1 is 300 ohms to limit the maximum current to 0.2 amp. Since the pull-in voltage of a relay is lower than the operating voltage, R_1 is made adjustable and can be set to adjust the sensitivity of the relay. If the pull-in voltage of the relay is known, the pull-in voltage may be substituted for E_{K1} in the formula. The resistance of a relay and, therefore, its sensitivity change significantly with heat. Pull-in current should be set after the relay has reached operating temperature. Wattage rating of the resistor may be computed from:

$$P = E_{K1}\left(I_{max} - \frac{E_{K1}}{R_{K1}}\right).$$

More sophisticated control circuits can be derived from this basic circuit configuration. Fig. 2 demonstrates two possibilities. In Fig. 2a, when an overload occurs, latching relay K_2 opens due to the breaking of the latch contact circuit by the normally closed contacts of K_1. In the circuit shown, pushbotton S_2 latches and S_1 releases the circuit.

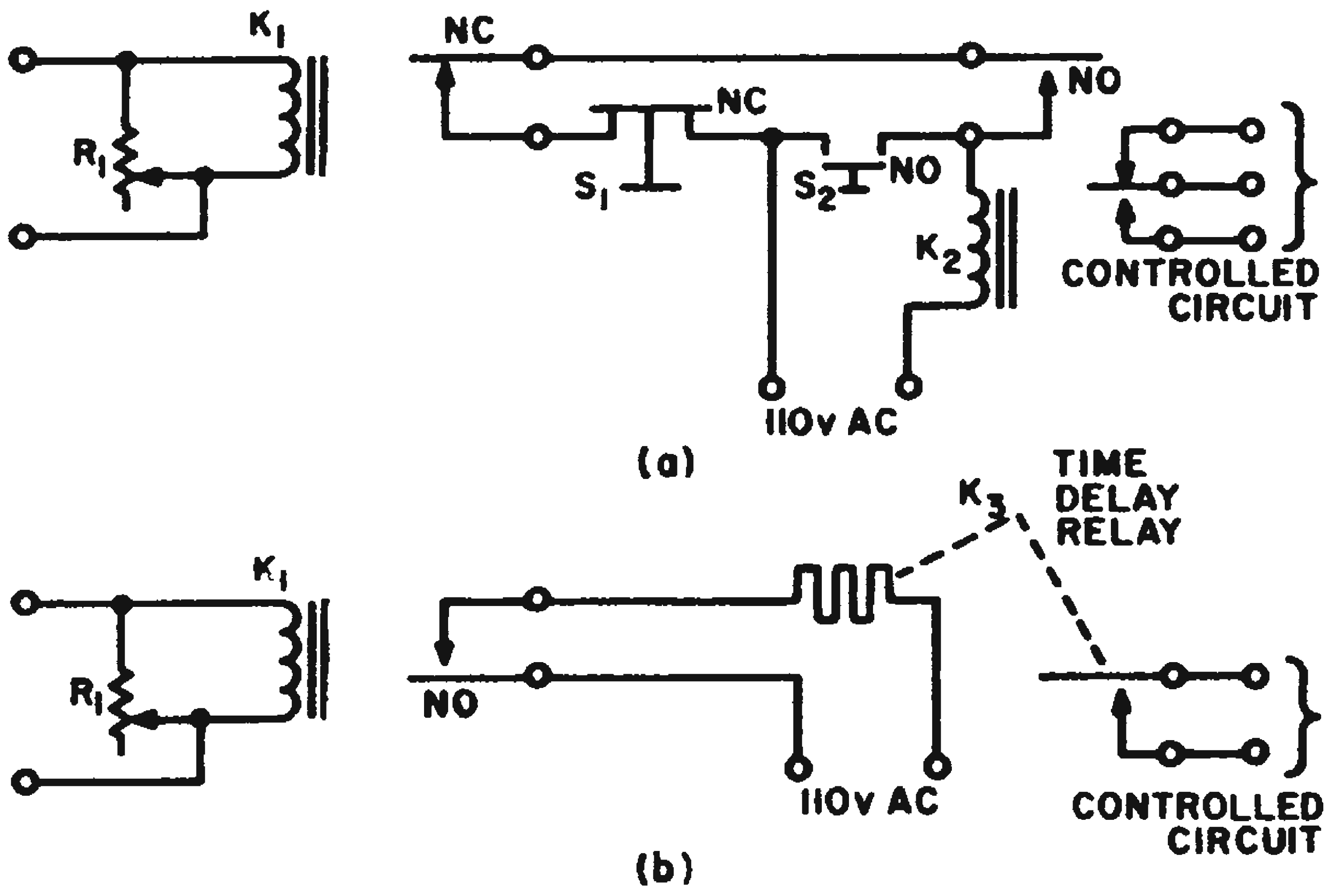

Fig. 2. Latching relay circuit (a) provides release on overload. Time delay relay (b) prevents release on momentary overloads.

Fig. 2b demonstrates a method for overcoming the releasing of K_2 on transients or momentary overloads, as would be the case with Fig. 2a. A short-cycle thermal relay is employed. A delay of 3 to 10 sec normally would be adequate. The delay should equal the longest anticipated normal momentary overload, such as is encountered when returning a transmitter tank circuit. A further sophistication may be achieved by consolidating the circuits of Fig. 2 into the circuit shown in Fig. 3.

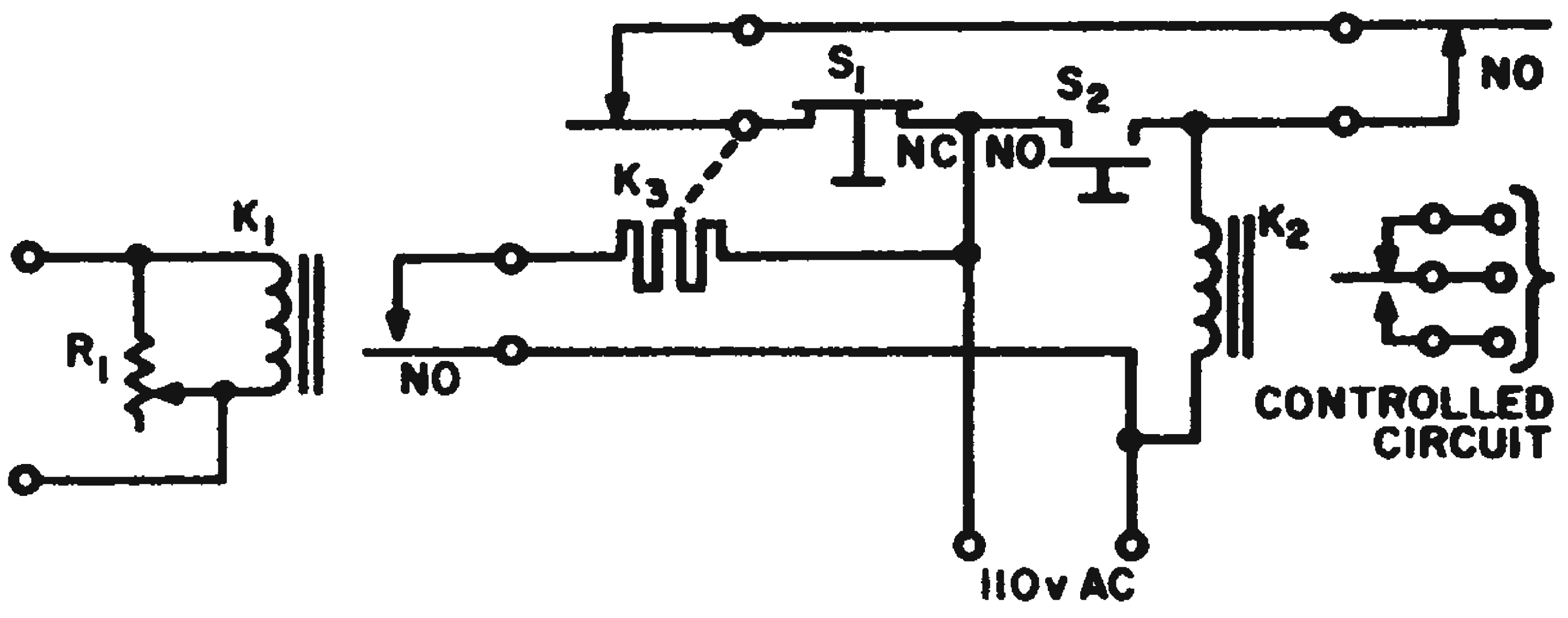

Fig. 3. Combined circuits of Fig. 2 provides advantage of both types.

Harold Weber, engineer, Laboratory for Electronics, Boston, Mass.

SCR Relay Flips, Flops On Consecutive Commands

Recently, we needed a circuit that would allow a load to be switched ON and OFF by consecutive commands with a minimum of power. The circuit we designed uses three silicon-controlled rectifiers and a double-pole, double-throw magnetic latching relay.

The SCR circuits are designed for a "starved" condition. When an SCR is turned ON, the dc holding current is insufficient for the SCR to remain ON. When the anode capacitor discharges, it is reset.

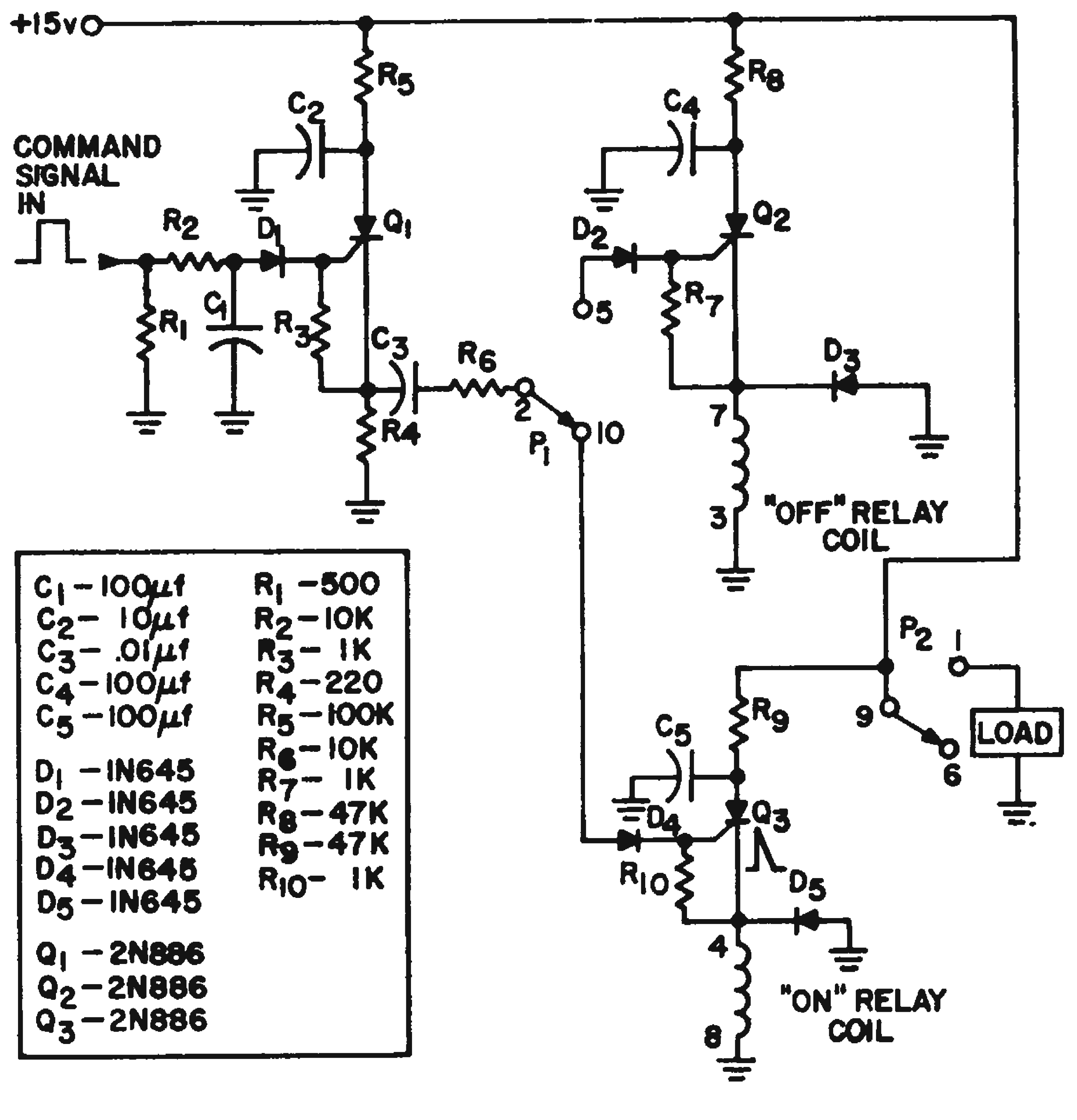

C_1 – 100µf
C_2 – 10µf
C_3 – .01µf
C_4 – 100µf
C_5 – 100µf

D_1 – IN645
D_2 – IN645
D_3 – IN645
D_4 – IN645
D_5 – IN645

Q_1 – 2N886
Q_2 – 2N886
Q_3 – 2N886

R_1 – 500
R_2 – 10K
R_3 – 1K
R_4 – 220
R_5 – 100K
R_6 – 10K
R_7 – 1K
R_8 – 47K
R_9 – 47K
R_{10} – 1K

Three-SCRs and a magnetic latching relay allow the load in this circuit to be switched ON and OFF by consecutive command pulses.

The circuit is shown in the ready-ON state where pole 1 is thrown to contact 10 and pole 2 to contact 6 (load disconnected). A positive pulse is applied to R_1 and the current through R_2 turns Q_1 ON for approximately 5 msec (discharge of C_2). The output positive pulse from Q_1 goes through contact 10 to the ON relay driver Q_3. Q_3 is turned on for about 30 msec (discharge of C_4). This time is sufficient to pulse the ON relay coil, causing the poles P_1 and P_2 to switch. The relay latches magnetically to the new pole positions (1 and 5), connecting the load to B^+ and placing the circuit in the ready-OFF state.

When another pulse is applied, the load is switched OFF by the firing of Q_2 (energizing the OFF relay coil) and the circuit flips to the ready-ON state.

The filter network of R_1, R_2, C_1 is added to desensitize the circuit to random noise spikes. Here the command step has to be applied for approximately 2 sec to allow C_1 to charge to the firing level of Q_1.

For the parameters shown, the circuit has a quiescent steady-state power drain of 0 w and a pulse power of 0.9 w for 30 msec. The power-handling capabilities depend only on the type of relay used.

John N. Libby, Justin C. Schaffert, Flight RF System Branch, Goddard Space Flight Center, Greenbelt, Md.

Compensating Voltage Reduces Zener Diode Variations

When a Zener diode (or ballast lamp, VR tube, etc.) is used as a half-wave ac clipper or dc regulator, Fig. 1, its internal resistance causes the output voltage to vary slightly with changing input. This variation can be eliminated if a compensating voltage, E_R, of equal slope, Fig. 2, is generated at a lower voltage level. The output is then taken between these two levels. This tends to eliminate the output voltage variations.

Resistor R can be adjusted for nearly perfect compensation at any current value. Because of device nonlinearity there will be a slight second-order change in output vs input. However, at least a five-to-one improvement has been obtained. This technique can be applied to dc voltage regulators, square-wave calibrators, electronic tachometers and similar circuits.

Theodore Byles, Project Engineer, Motorola, Inc., Franklin Park, Ill.

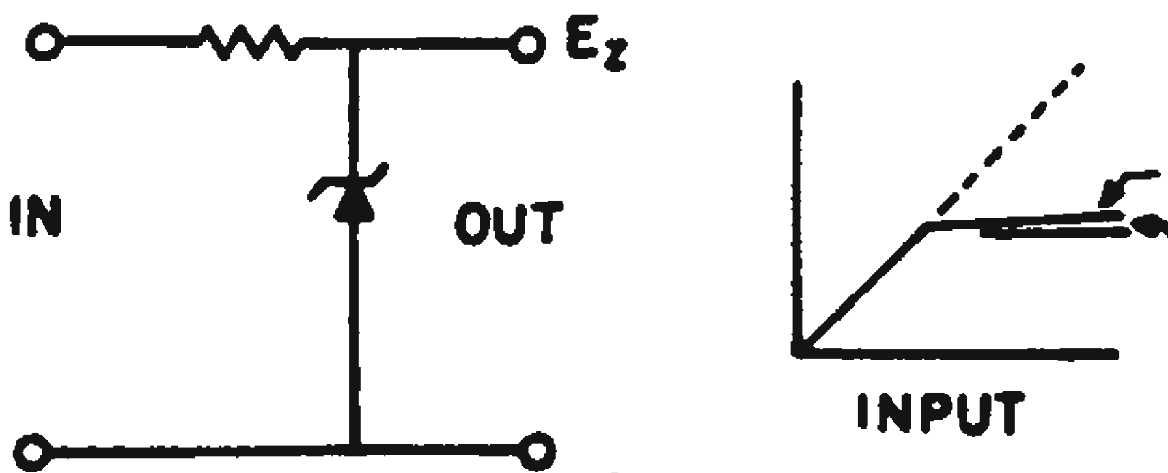

Fig. 1. Internal resistance of Zener causes output voltage to vary by dc as input changes.

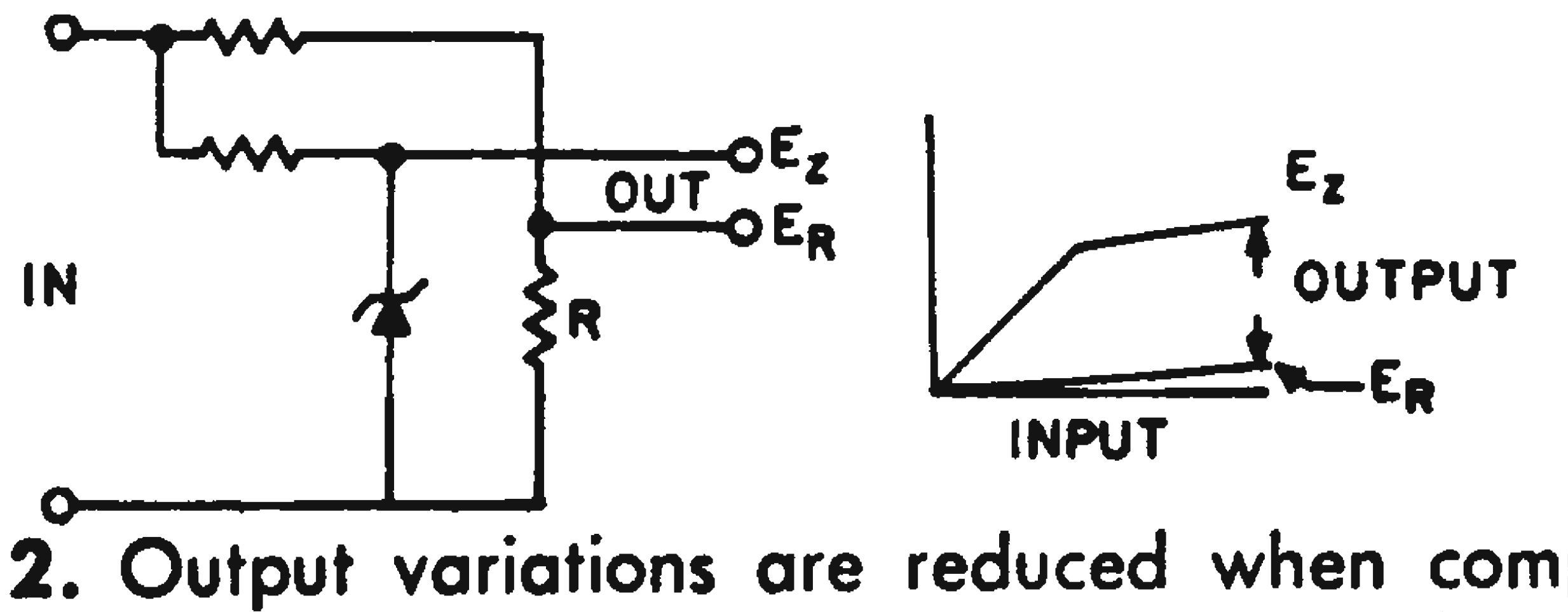

Fig. 2. Output variations are reduced when compensating voltage E_R is generated to form part of output.

Automatic Gain Control Circuit Uses Unijunction Transistor

The unijunction transistor, with its negative resistance characteristic, lends itself quite simply to applications requiring limited automatic gain control. An agc circuit using a unijunction is shown in Fig. 1.

As the input rises, the current into the detector and the emitters also rises, causing the emitter-to-B_1 resistance to fall. Since the output is IZ_{BB} (Z_{BB} is the B_2 to B_1 resistance), as I increases Z_{BB} decreases.

The emitter-to-B_1 resistance (for a 2N492) varies from approximately 4.6 K for zero emitter current, to 150 ohm for an emitter current of 10 ma. This change in resistance is fairly linear for emitter currents of from 1 to 5 ma (emitter-to-B_1 resistance from 2 K to 240 ohm). For linear operation, these emitter current values should not be exceeded.

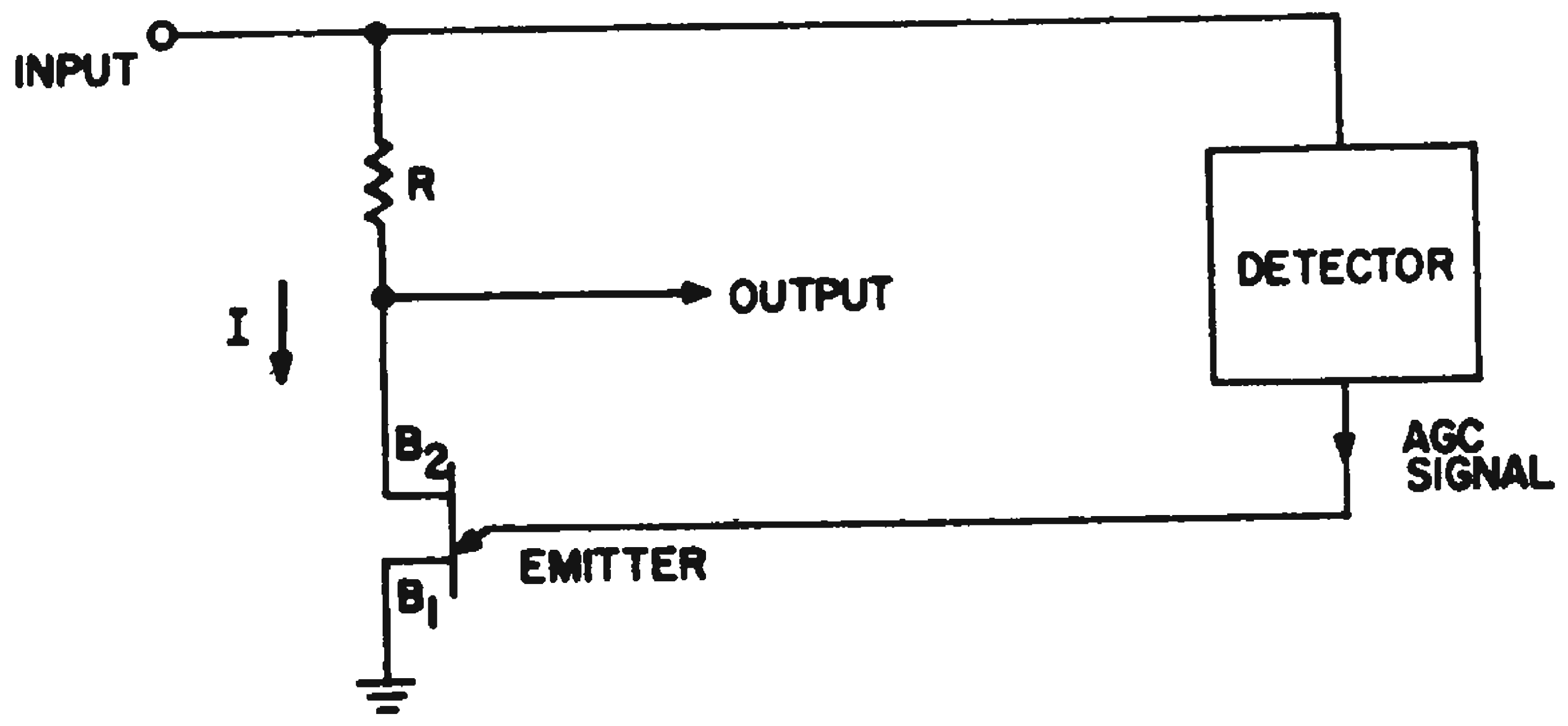

Fig. 1. The negative resistance characteristic of a unijunction transistor can be applied in this basic agc circuit.

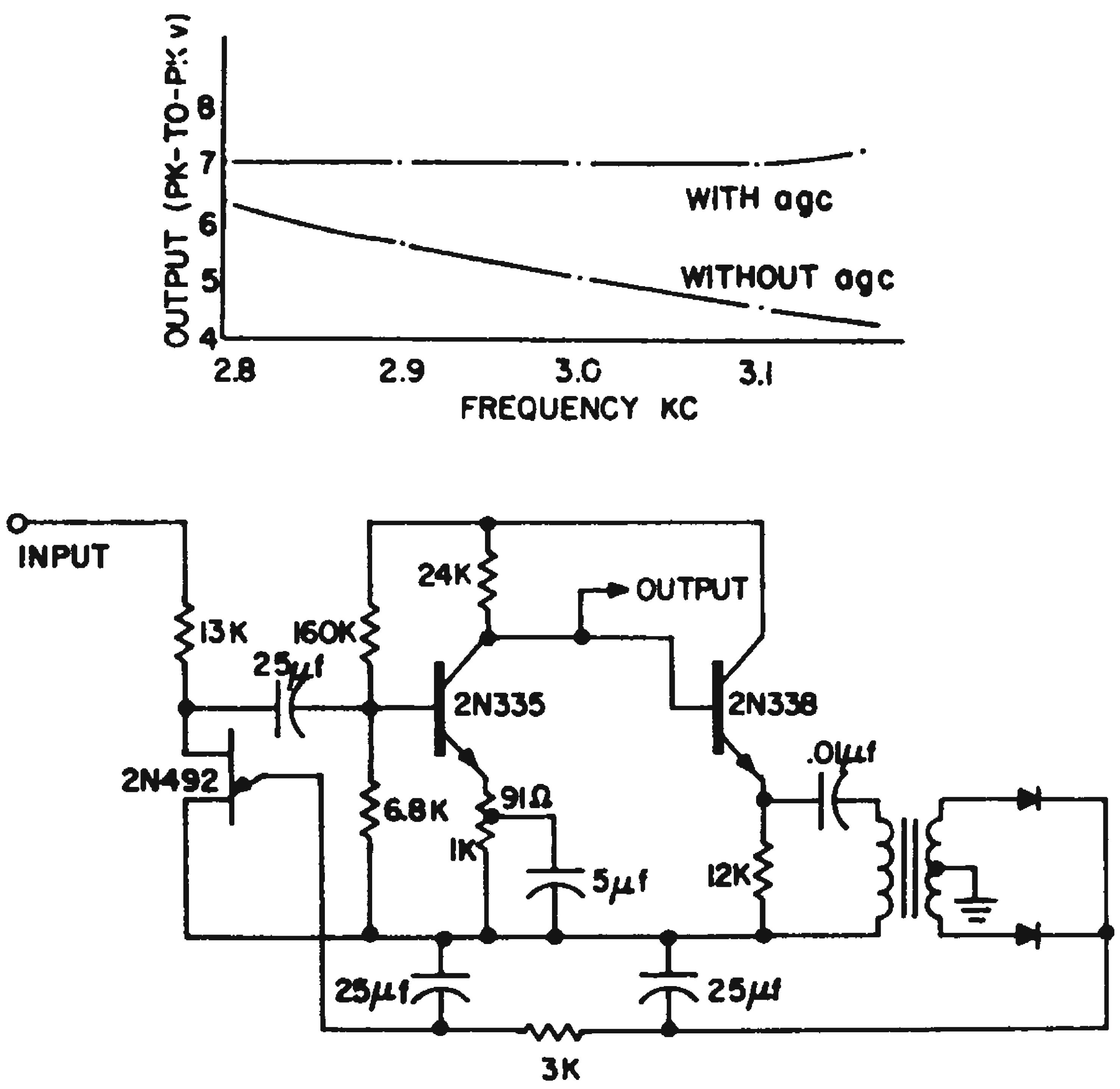

Fig. 2. Unijunction transistor is here used to compensate an oscillator whose output varied universely with frequency. Graph shows affect of agc.

Fig. 2 presents a unijunction agc circuit used to compensate an oscillator whose output decreased as the frequency increased. The graph illustrates the result of this agc compensation.

This circuit is only one of many in which agc may be obtained with the unijunction transistor. Thus, the unijunction could also be used in place of the emitter resistance in an amplifier, controlling the gain by varying this resistance.

Richard S. Hughes, Electronic Engineer, U. S. Naval Ordnance Test Station, China Lake, Calif.

Short Trigger Pulse Turns On SCR, Fires Flash Bulb

A photoflash lamp had to be activated by a trigger pulse whose width was only 2 μsec—too narrow to fire the lamp directly. To effectively lengthen it, the pulse was applied to the gate of a silicon controlled rectifier as shown in the figure.

With no signal at the transistor input, the rectifier does not conduct. When the trigger pulse is applied, the rectifier's gate lead falls toward ground, and the rectifier fires. It remains "on" even after the 2-μsec input pulse has been terminated.

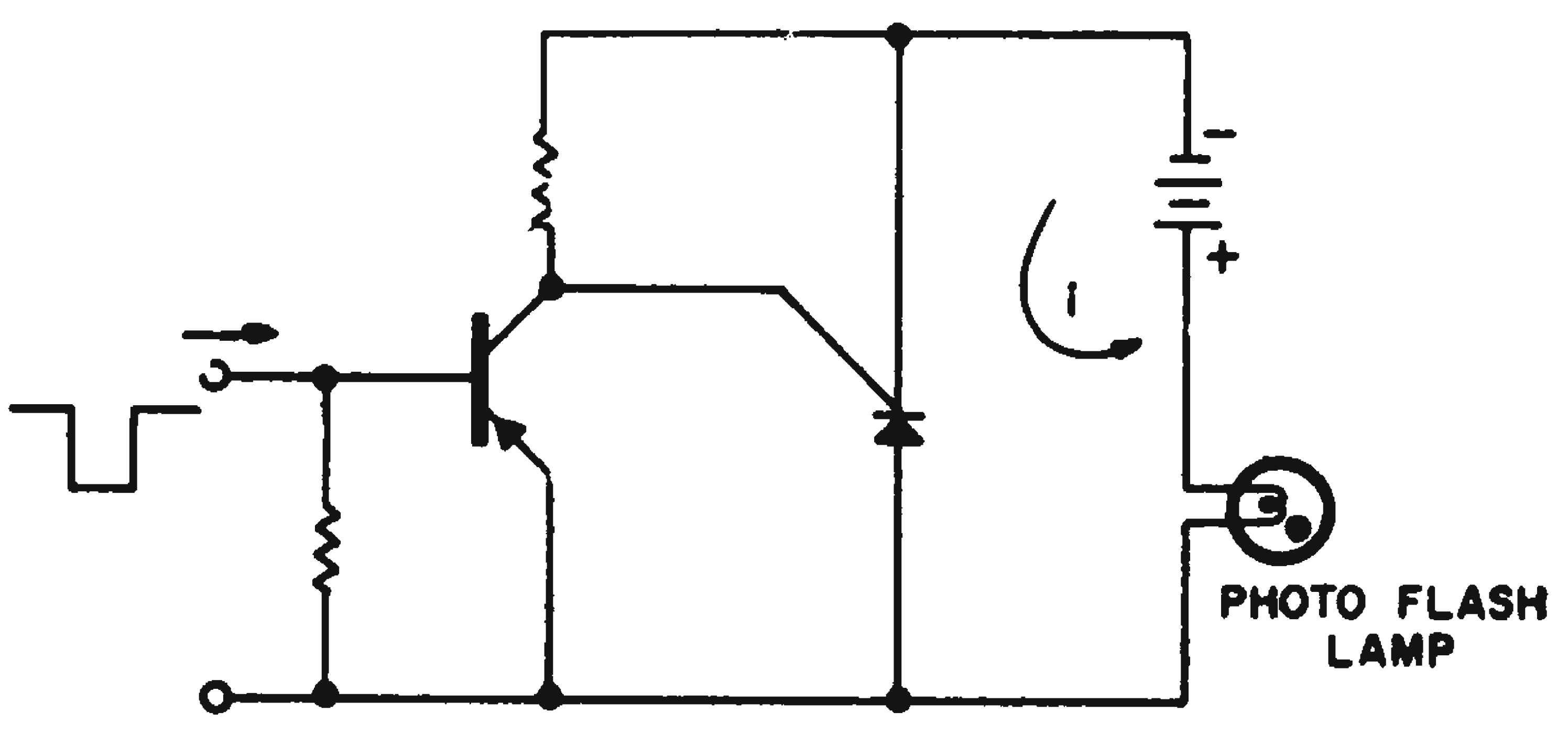

Narrow 2-μsec trigger pulse fires silicon controlled rectifier which stays "on" long enough to fire flash bulb.

In less than a millisecond, the photoflash bulb is fired by the current *i*, and its filament opens. The current *i* is now zero and the silicon controlled rectifier is reset for the next cycle.

Note that when the bulb filament is opened, the battery voltage is removed from the transistor as well as from the rectifier. When a new bulb is inserted, the rectifier will remain "off" until the next trigger pulse.

Alfred W. Zinn, Engineer, Farrand Optical Co., Inc., New York, N.Y.

Unijunction Transistor Attenuates AC With DC

The volume of an audio signal is usually controlled by a potentiometer acting as an ac voltage divider and adjusted to give the desired output. However, a control operating on dc would offer some very useful advantages.

When the volume control is situated at a remote position and long interconnecting wires are required, the system can suffer from noise pick-up. The amount of noise can be reduced if low-impedance circuits are used. But, low-impedance circuits often waste power and it becomes necessary to compromise between noise pick-up and power dissipation.

A volume control operated with direct current could be filtered on both ends of the interconnecting wires. It could eliminate noise without any loss in power. This dc control can be accomplished with a unijunction transistor.

In the unijunction, the resistance between the two bases (base-to-base resistance) changes when a direct current is injected into the emitter. The higher the current, the more carriers are injected in the base material and the lower is its resistance. This increases the conduction. Thus, if the dc is increased, the audio is divided down by resistor R_1 and the base-to-base resistance of the unijunction, and the ac output voltage decreases, Fig. 1. Output can be controlled by the dc voltage flowing through potentiometer P_1. Attenuations as high as 40 db in voltage, with 1 per cent max distortion, have been obtained.

This same characteristic can be used for the audio agc system shown in the block diagram of Fig. 2. Both circuits are non-regenerative devices.

Although these circuits operate at audio frequencies, the unijunction also can be used as an attenuator for radio frequencies. This is because conduction in the base material is by majority carriers, allowing high-frequency operation. In the emitter, conduction is by minority carriers. Thus, the frequency at which the attenuation can be changed is less than the frequency of the wave to be controlled. Nevertheless, since this is usually the case encountered in practice, the limitation causes no difficulty.

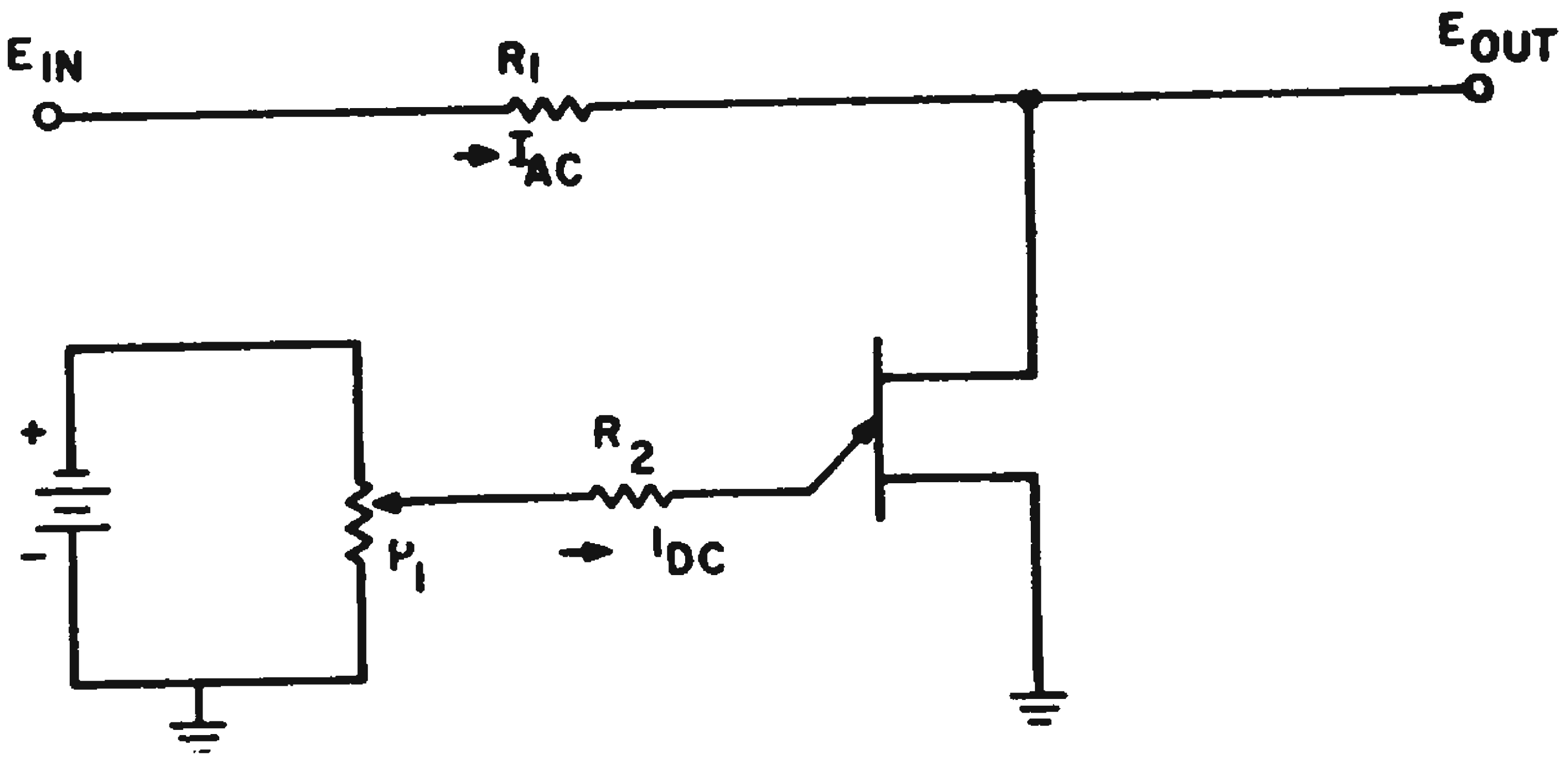

Fig. 1. Ac output voltage is controlled by varying base-to-base resistance of the unijunction from a dc source.

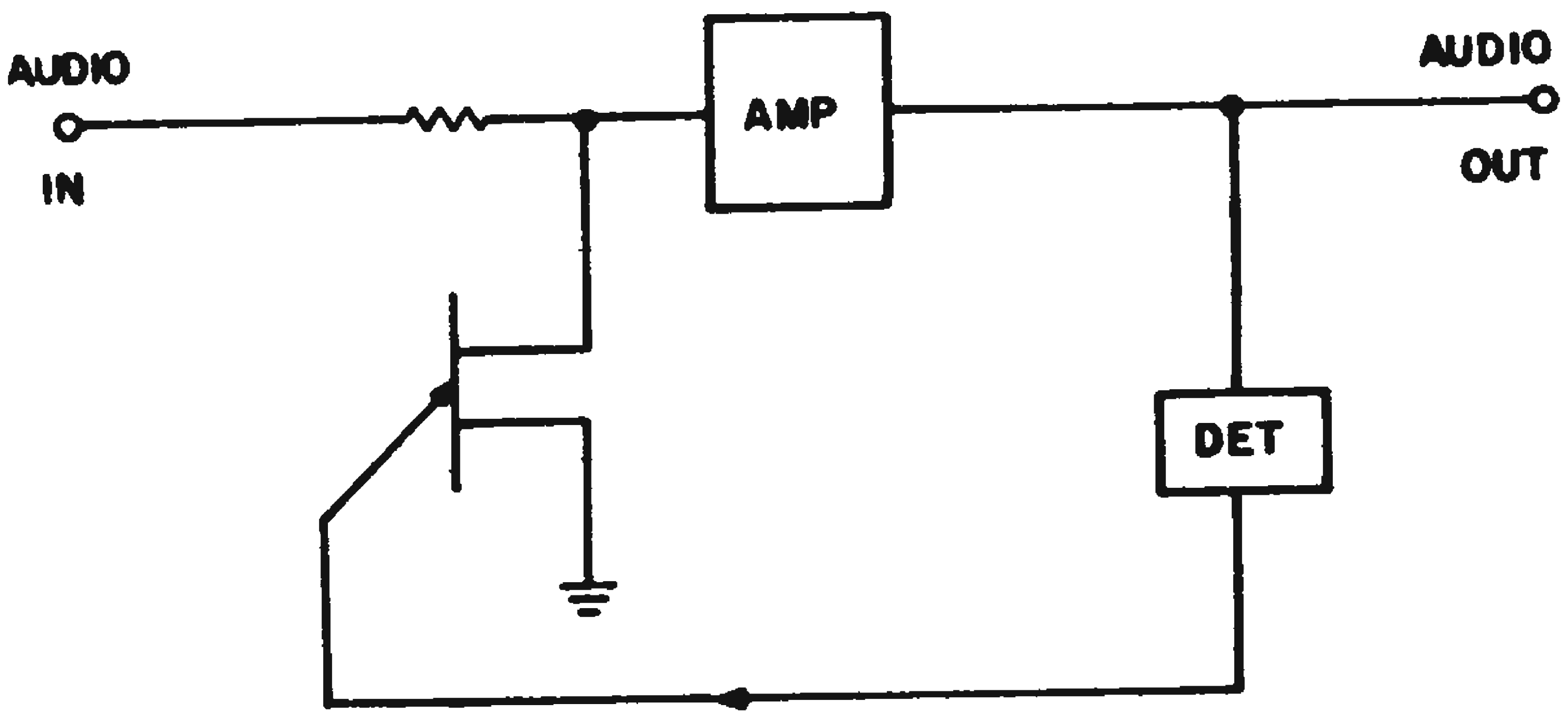

Fig. 2. Variable resistance affect of unijunction is used in audio agc system.

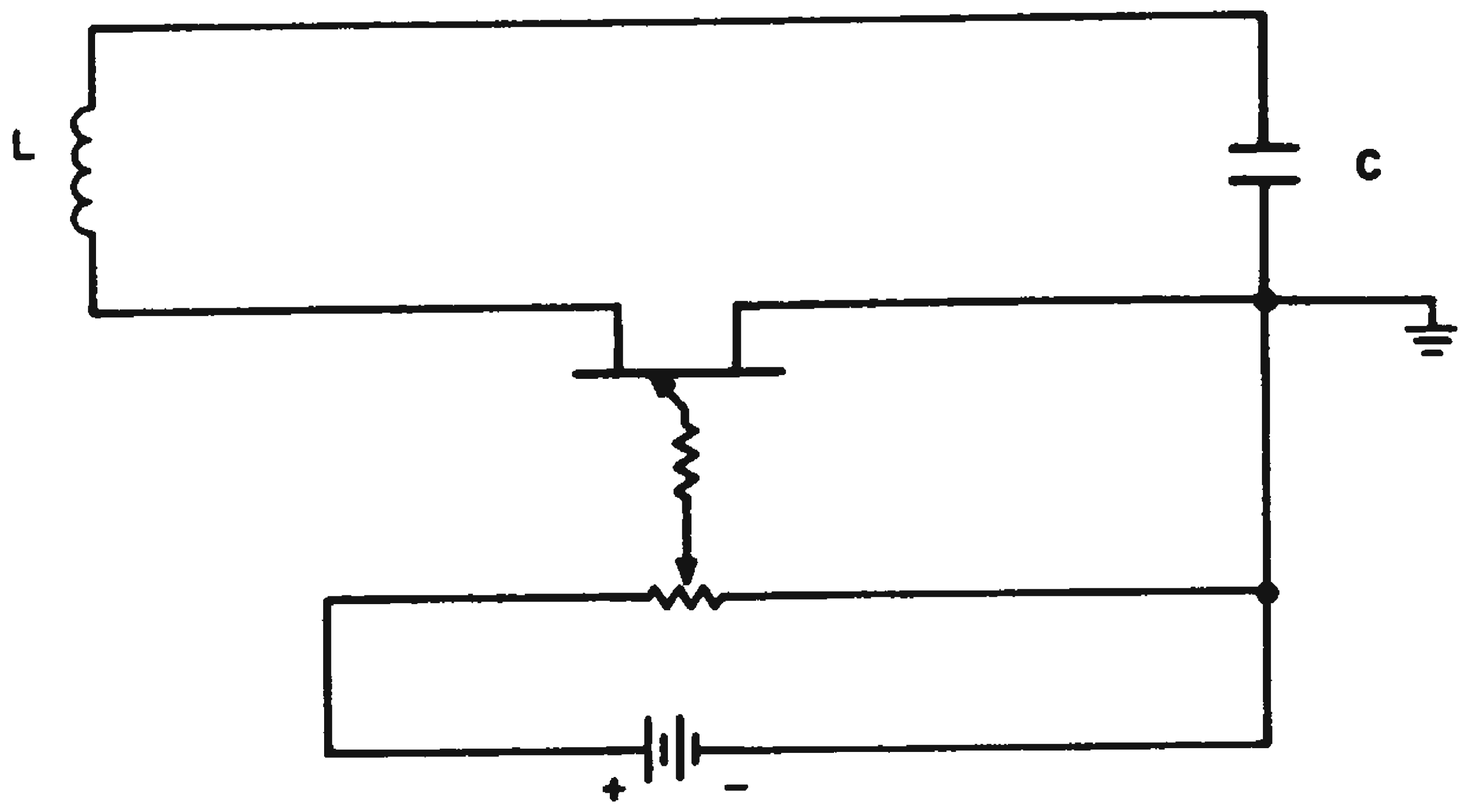

Fig. 3. Unijunction also can be used to automatically adjust tuned-circuit Q.

The unijunction transistor can also be used for variable coupling of tuned circuits and to help in the automatic adjustment of "Q". This last application is shown schematically in Fig. 3.

Silvio Soares, Assist. Project Engineer, Avionic Products, Bendix Radio Div., Baltimore, Md.

Shorting Transistor Reduces SCR Turn-Off Time

Silicon-controlled rectifiers have not been used extensively in dc circuits because of the difficulty in turning them off. But an SCR can be turned off efficiently by shorting it with a transistor for the brief period required to turn it off.

In the circuit shown in the figure, control current is fed into the bases of transistors Q_1 and Q_4. When the "on" portion of the control current flows, Q_1 is off and allows gate current through R_1 to the SCR, D_1. Transistors Q_4 and Q_5 are also off, so that the entire load current passes through D_1, D_2, and D_3. The voltage drop across D_2 and D_3 is used to saturate Q_2. This blocks any base current to Q_3.

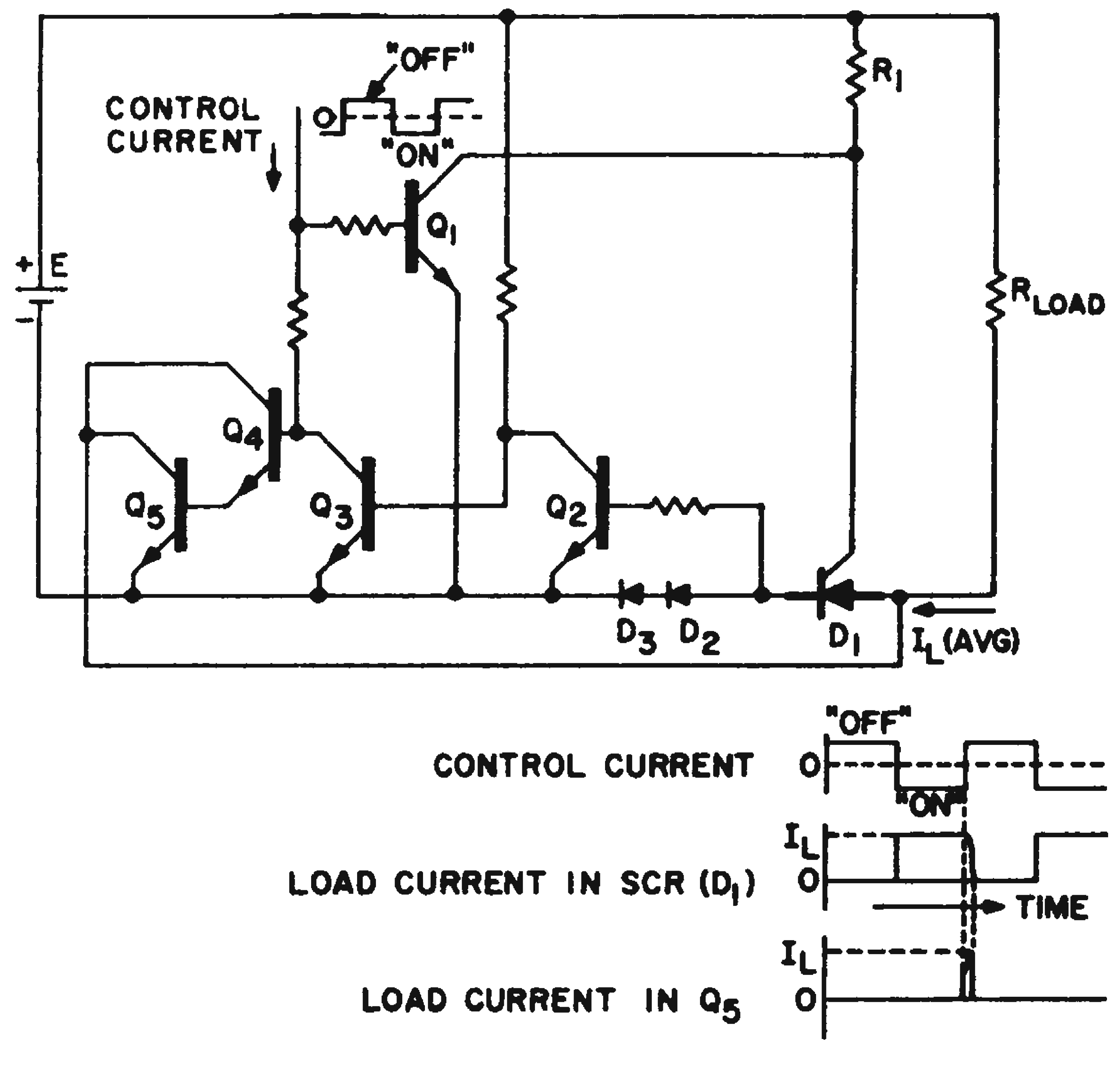

Silicon-controlled rectifier is turned off rapidly by shorting it with a transistor, Q_5, during the brief turn-off transition.

When the "off" portion of the control current flows, it saturates Q_1, which cuts off gate current to the SCR. The control current also saturates the Darlington connection of Q_4 and Q_5, allowing all the load current to bypass the diodes (D_1, D_2, D_3) and go through Q_5. However, as soon as the current in D_2 and D_3 is reduced to zero, Q_2 turns off, and Q_3 saturates. This pulls the base of Q_4 below its emitter which again turns off Q_4 and Q_5.

The SCR remains off until the next "on" portion of the control current arrives. Q_5 remains off until it is time to turn the SCR off again. If a temporary malfunction or a large dv/dt turns the SCR on during the "off" portion of the control current, the circuit will automatically turn the SCR off.

A typical turn-on time for a high current SCR is 0.5 μsec, while a typical turn-off time is 5.0 μsec. Transistor Q_5 handles only a small fraction of the total load current while the SCR does most of the work. Thus, high switching rates can be realized without dissipating a great deal of power in Q_5. Since the SCR is either off or on, it also dissipates very little power.

It might be noted that insulation hardware for Q_5 and D_1 is not necessary if the circuit is grounded to the chassis at the anode of D_1.

D. K. Phillips, Member of the Technical Staff, Hughes Aircraft Co., Culver City, Calif.

Versatile Transistorized Alarm Detects Pulse Dropouts

A simple alarm circuit is often necessary to monitor different types of signal sources and indicate different types of failures. The circuit shown gives an indication whenever a maximum "off" period exceeds a preset time. It was designed to monitor three types of sources:

1. It detects dropouts of one or more consecutive pulses in a repetitive pulse train.
2. It detects "dead" periods exceeding a preset interval in a random pulse pattern or in a pulse train having random pulse widths.
3. It detects a momentary dropout longer than a preset period in monitoring a dc line.

The circuit has provision for manual or automatic reset. In the reset condition it returns to the nonalarm state upon renewal of the source voltage. Using low standby power, it operates from a single power supply with wide limits on voltage variation.

The circuit operates as follows: In the absence of an input voltage, *Q1* doesn't conduct and *C1* charges towards the critical "fire" voltage of *Q2*. A pulse at the input momentarily switches *Q1* into saturation and causes *C1* to discharge to ground through the diode and *Q1*'s collector resistance.

If the maximum time between pulses exceeds the firing time constant of the unijunction transistor (as determined by R_c, *R1* and *C1*), *Q1* fires and turns on *Q3*, thereby initiating the alarm signal.

The circuit is manually reset by disconnecting the voltage supplied to the pnpn switch. When

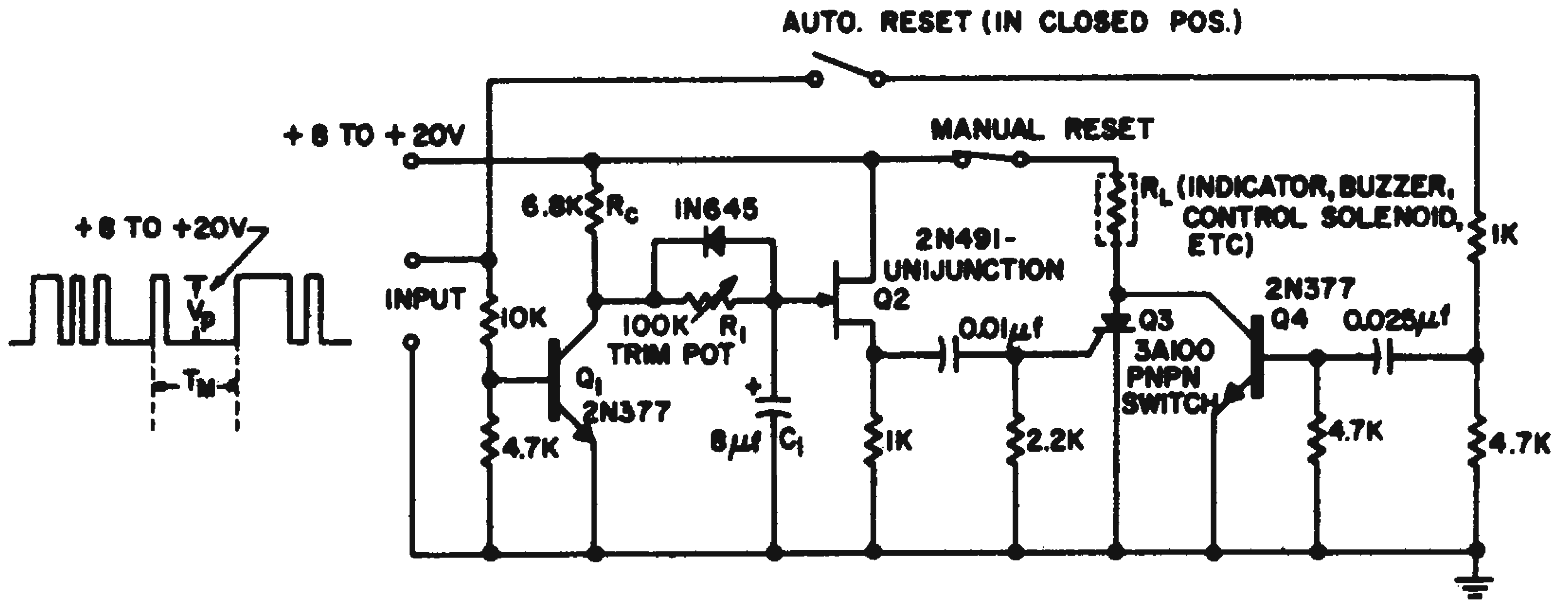

Novel use of diode in unijunction-transistor timing circuit makes for versatile alarm circuit. Most unijunction circuits described in the literature deliver a pulse when a charge cycle on a timing capacitor is completed. In this circuit, this is actually the abnormal condition. The diode provides an alternate discharge path, yet does not interfere with the normal charging cycle.

the automatic reset switch is closed, return of source voltage at the input capacitively couples a turn-on pulse to *Q4* which resets *Q3* to the blocking state.

For the values shown, an interval of 100 msec to 1.5 sec can be obtained. The pulse widths required at the source can occupy less than 1 per cent of the time-interval setting so the alarm can be used in low-duty-cycle circuits.

The circuit has been used for a wide variety of industrial-control and alarm-indicating applications. Two widely differing applications in one plant can illustrate the circuit's versatility.

In the first case it was used to monitor answer-sheet feed on a test-scoring machine. Occasional misfeeds cause jams unless they can be detected shortly after the first sheet misfeeds. A microswitch, driven by a cam, supplies dc to the alarm circuit for a few milliseconds as each sheet passes a certain point. The circuit detects absence of the pulse, indicating a jam, and shuts off the feed by means of a control solenoid.

In another case, the alarm circuit monitors the initial state of a pulse-sequence generator. The circuit fires a visual indicator (an incandescent lamp) which flashes a warning if a given cycle is delayed.

John V. McMillin, Project Engineer, Measurement Research Center, Iowa City, Iowa.

Terminal Plate Serves as Common Connecting Point

Connecting more than 3 or 4 wires to a common connecting point usually poses a problem. How can the wires be fastened securely to each other without causing a messy, badly-soldered pile-up?

The usual methods use either a buss wire strung between two terminals or a terminal strip. A more compact and sturdier method is illustrated by the terminal plate shown in Fig. 1*a*. This plate can be cut from a piece of copper, or other conducting metal. Its thickness need by only about 0.032 in. Wires are connected to the terminal plate as shown in Fig. 1*b*. Note that the plate is insulated from the mounting surface by a ceramic stand-off. With the holes dimensioned and drilled as shown, up to 32 AWG #22 wires or 8 AWG #6 wires, or any comparable number of conductors can be securely held.

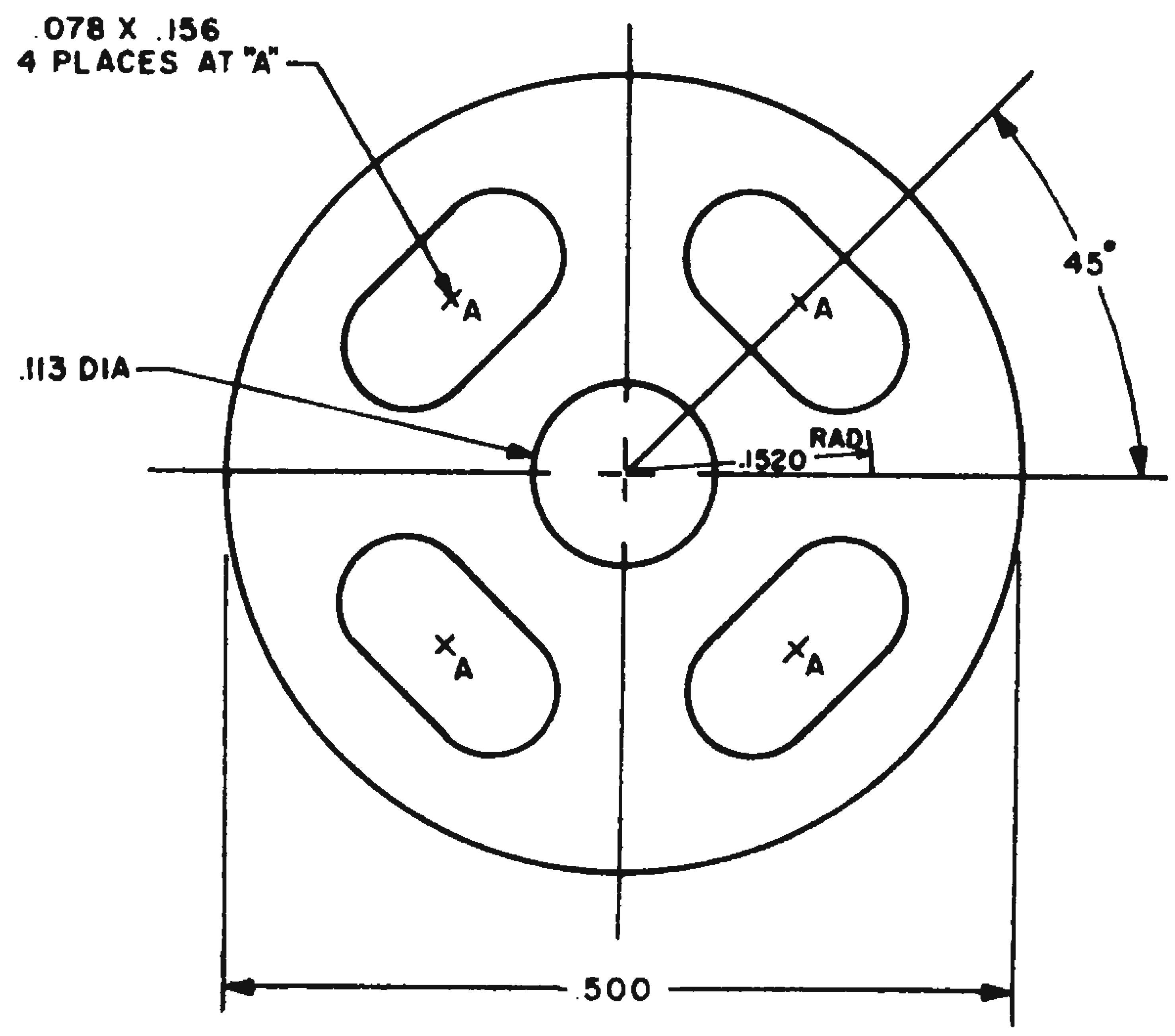

Fig. 1a. Multiple wire connections can be made to a terminal plate fashioned from a piece of metal.

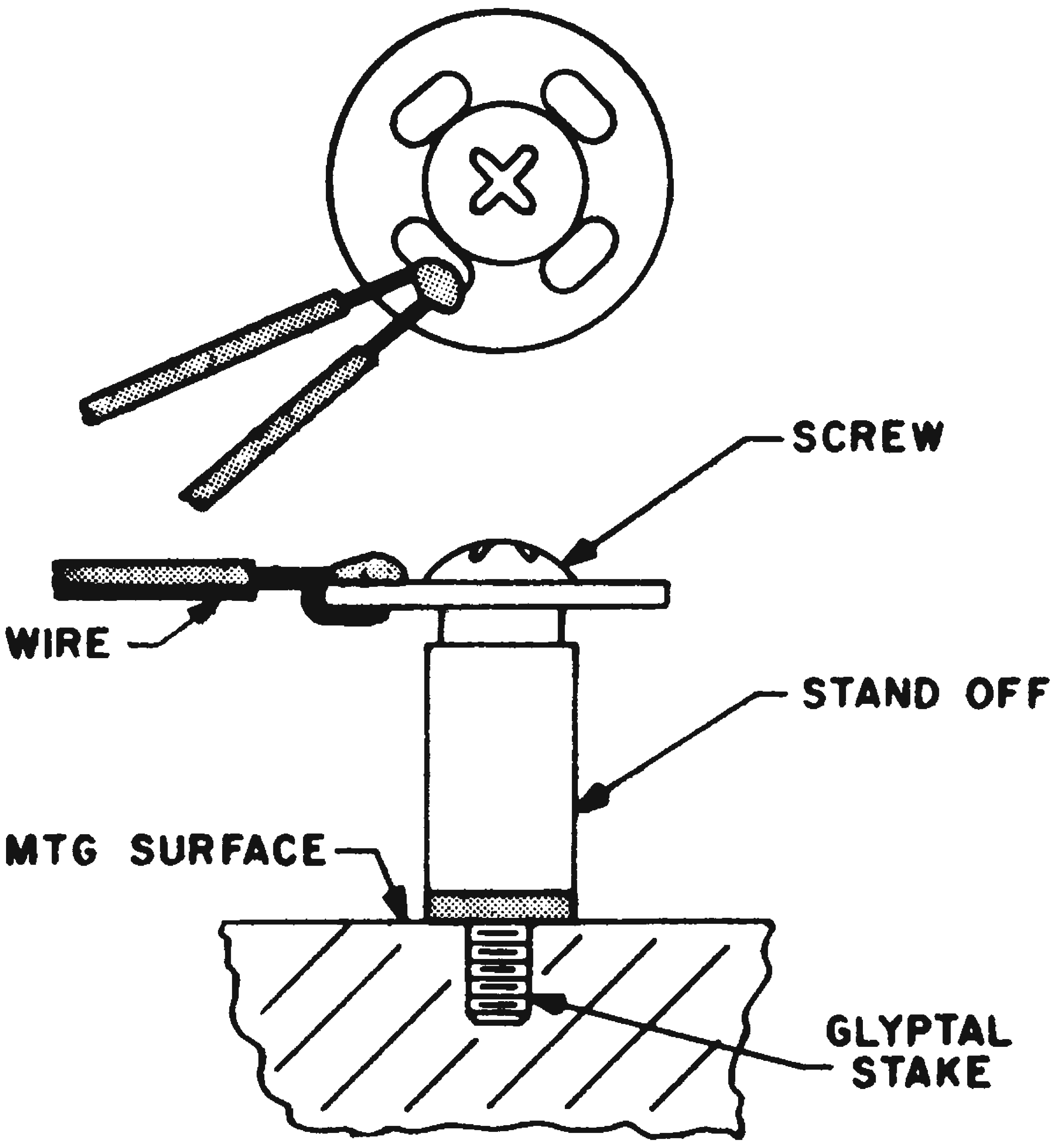

Fig. 1b. Wires are soldered to the plate which can be insulated from the mounting surface by a ceramic standoff.

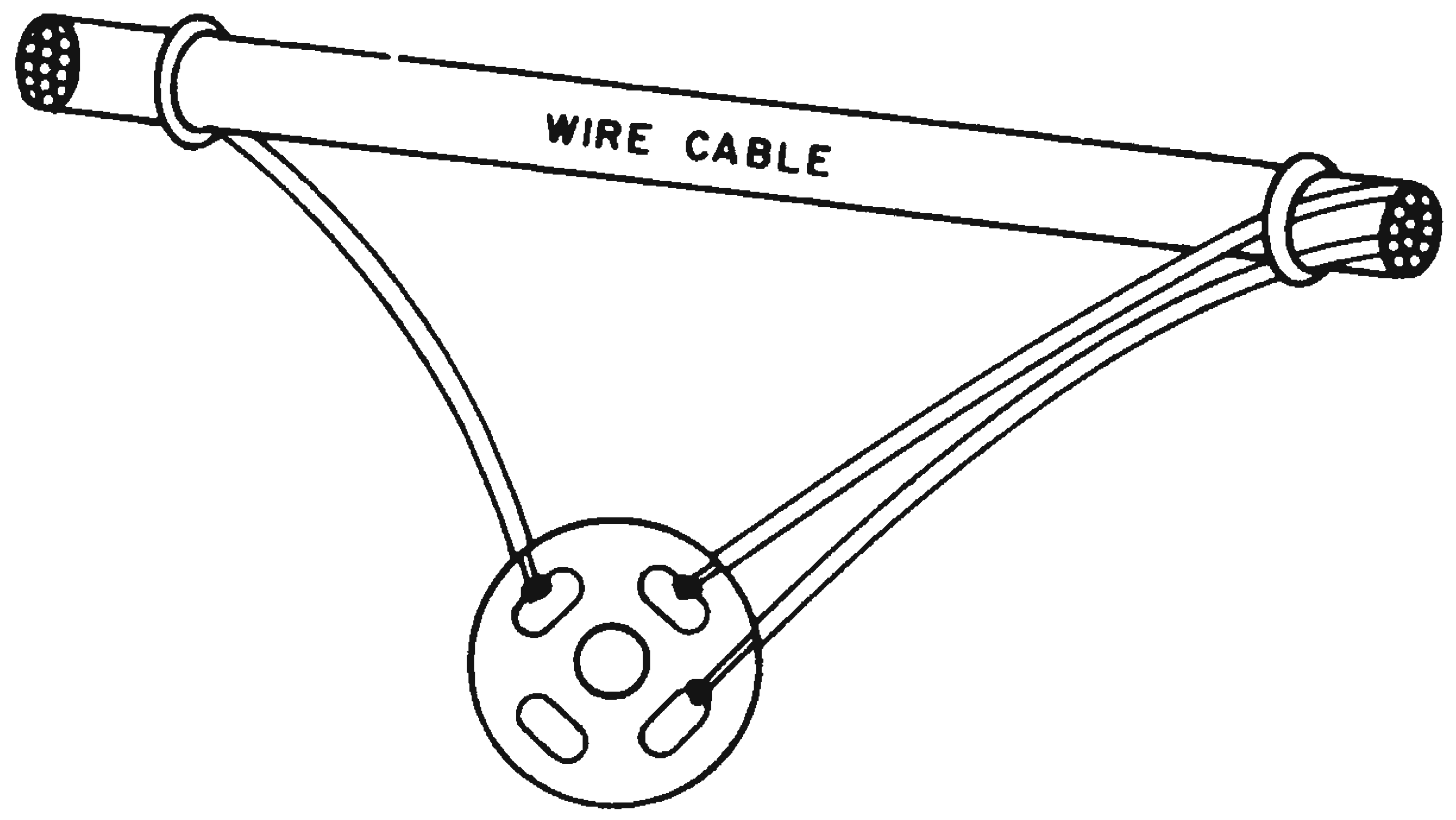

Fig. 2a. The terminal plate can be soldered into cables as part of the harness assembly.

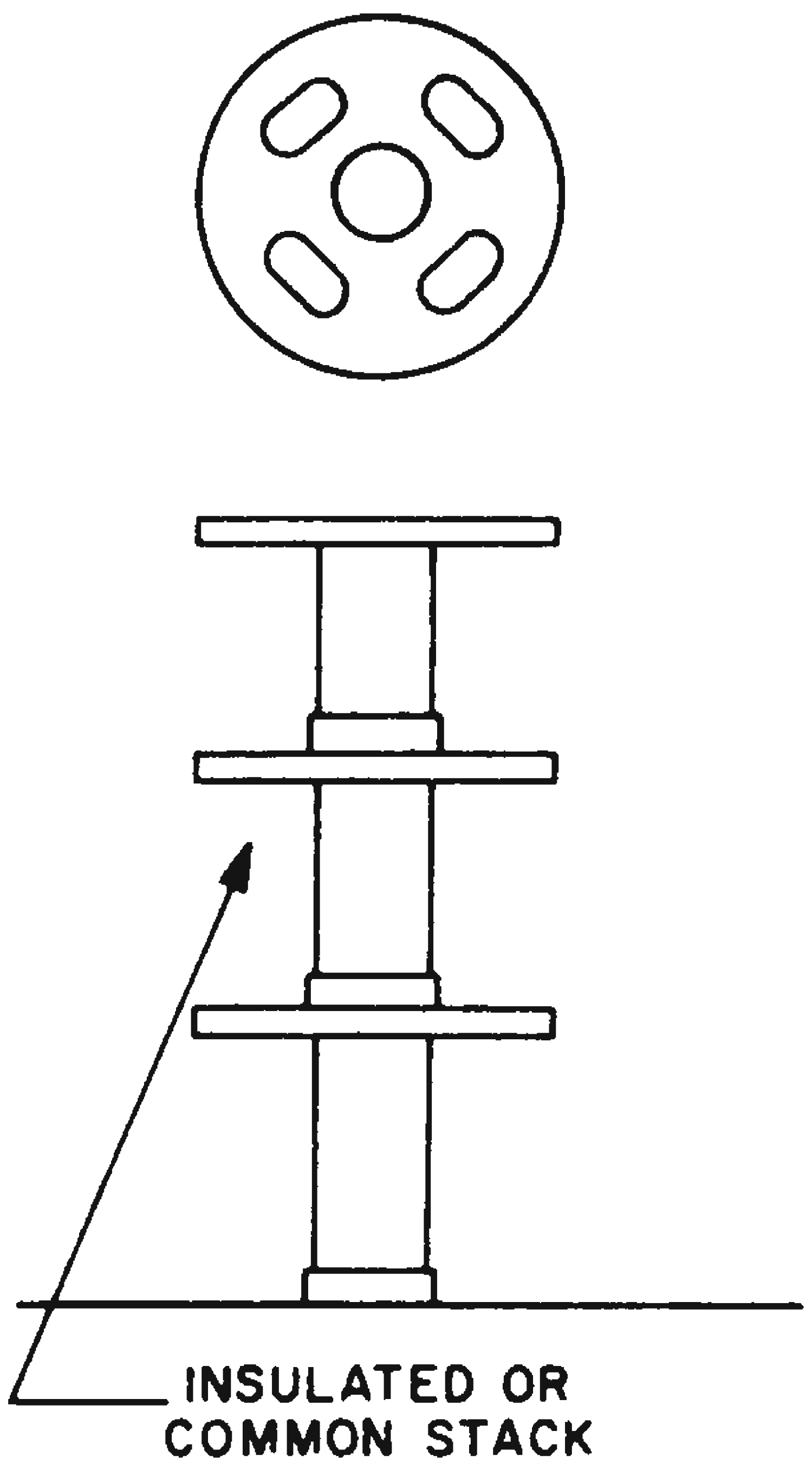

Fig. 2b. Terminal plates can be stacked on an insulated or common stack.

There are other ways in which the terminal plate can be used. Fig. 2*a* shows it soldered into cables at the harness assembly. Or, the plates can be stacked, Fig. 2*b*, to accommodate a larger number of wires than a single unit can.

Stephen Szczygiel, Design Draftsman, General Electric Co., Utica, N.Y.

Metal Sponge Provides Contact Between Two Metal Plates

An inexpensive metal sponge was used to provide a conductive, flexible contact between two brass plates. With the sponge in place, one plate supports the other and is able to move relative to it. Also, an intimate electrical short is constantly maintained between the plates.

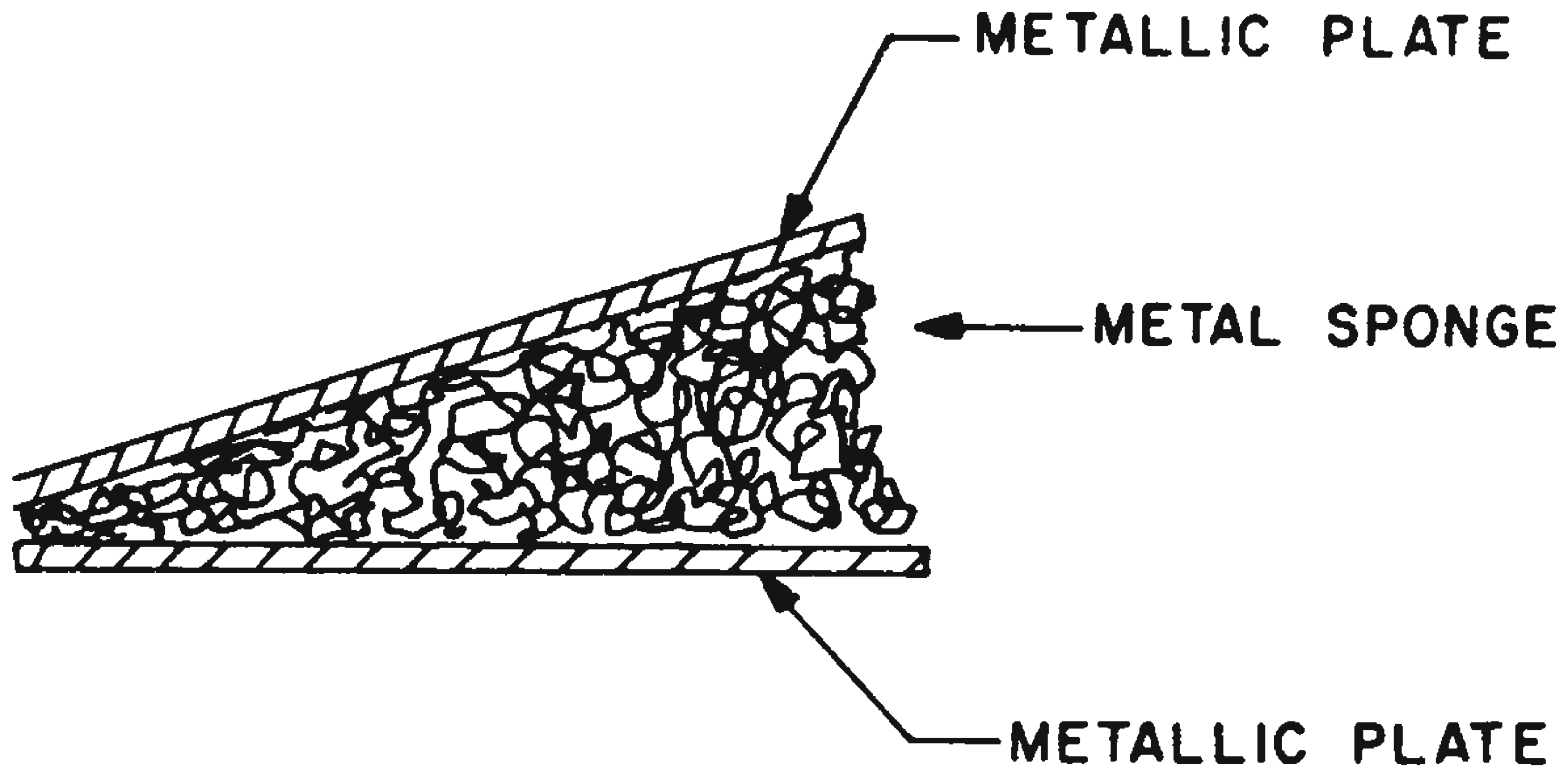

A metal household cleaning sponge provides an intimate, flexible short between two metal plates.

The sponge, normally used for household cleaning, is usually purchasable in the shape of a round pad. However, it can be cut to any size and it can be compressed as much as is necessary. Under sufficient pressure no measurable electrical resistance could be observed.

Alfred W. Zinn, Engineer, Farrand Optical Co., Inc., Bronx, N.Y.

Rubber-Core Terminals Hold Wires Securely

Clamp-on, screw-on or other metal-to-metal terminals for fast, temporary connections can cause trouble when the wires to be clamped are of difficult diameter. Often the larger wire springs open the holding device. Used on breadboards, such clips or screw terminals may be susceptible to vibration or shock.

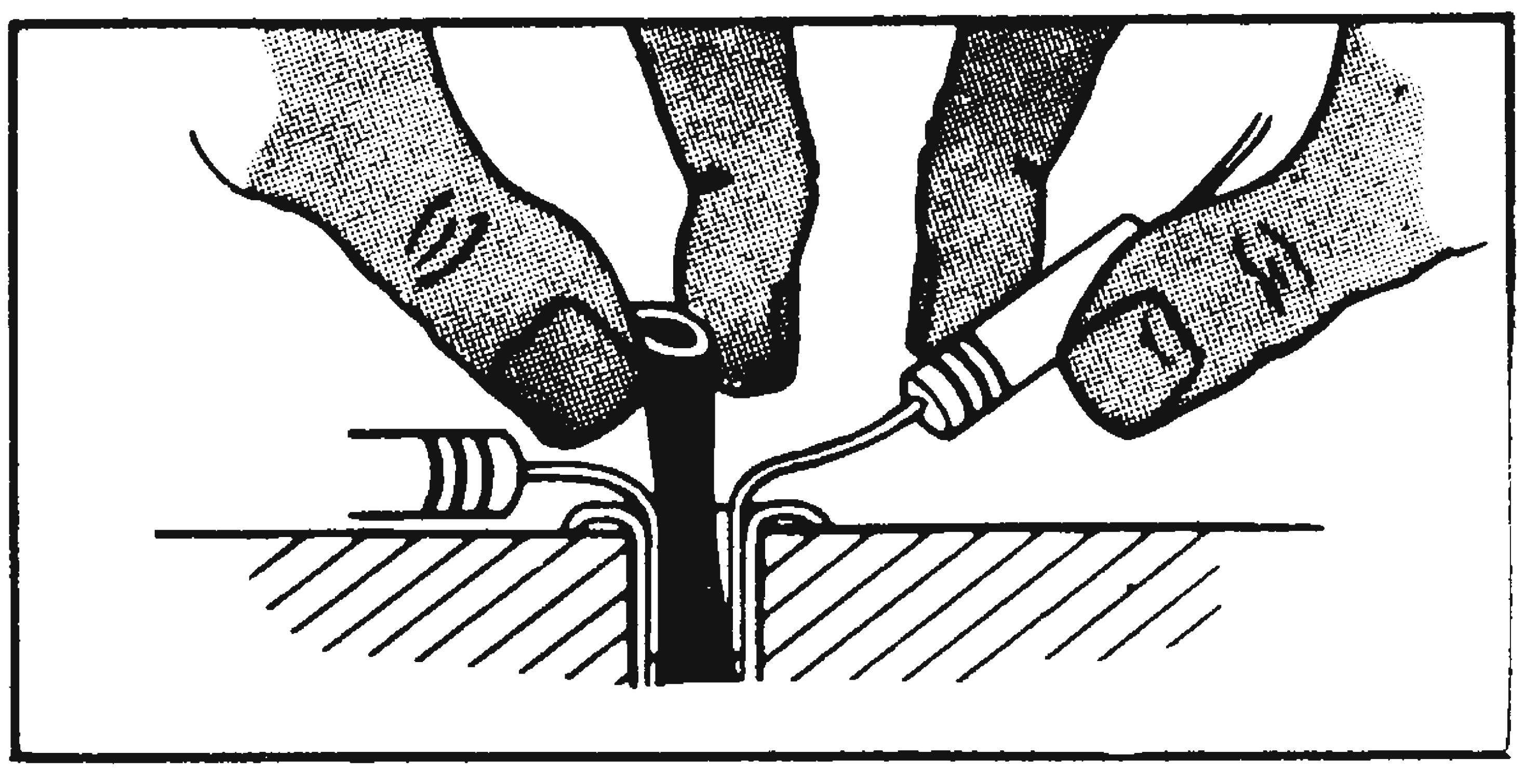

Fig. 1. By stretching the rubber core, different diameter wires are inserted and gripped firmly in this interesting terminal design.

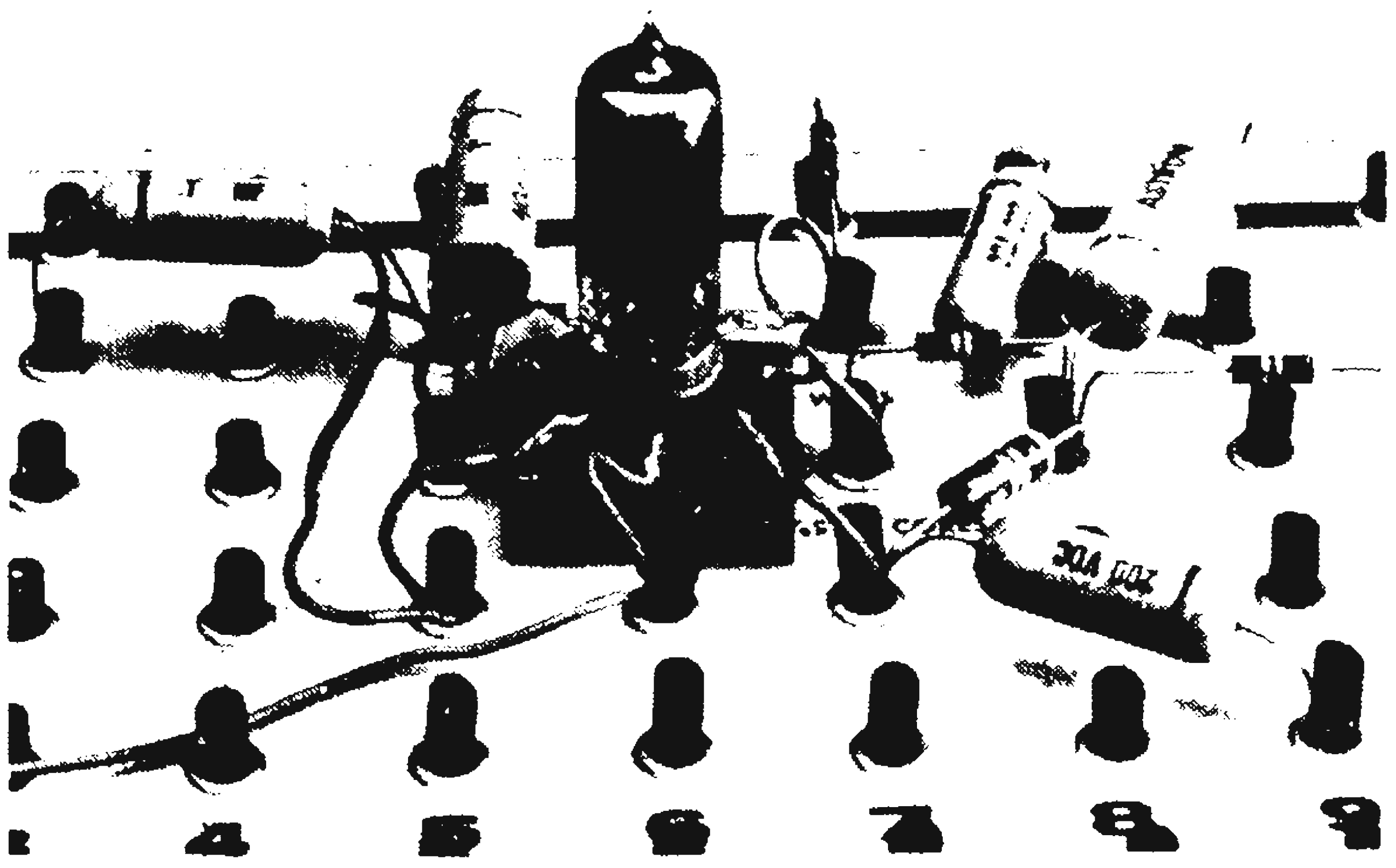

Fig. 2. The terminal cells are shown supporting different wires on a breadboard layout. Wires are easily inserted with no soldering or screw-turning required.

With a new terminal consisting of a gold plated eyelet and rubber core, wires of different diameters are gripped firmly. To insert a component lead, the rubber core is stretched upward, leaving space to slip the wire against the side of the eyelet. Releasing the core presses the wire firmly against the gold-plated surface. Vibration and shock immunity are exceptionally good.

E. L. Van Deusen, Plastic Associates, Laguna Beach, Calif.

Mounting Stud Cast From Encapsulating Material

By casting a mounting stud as part of the encapsulating material, miniature transformers can be easily attached to printed-circuit boards. The material used must be sufficiently strong so that the stud, thread-casted, can be secured directly to the printed board with a nut and a lock washer.

This idea was used in a transformer where the mounting stud had been cast in a split mold of Teflon. An epoxy resin was used as the encapsulating material. The transformer cavity in the Teflon was cylindrical, slightly larger in diameter than the stud. The stud cavity was drilled and tapped in the bottom of the larger cavity. The greater diameter of the transformer material enabled it to act as a collar when the transformer was mounted.

It was found that this mounting method could withstand considerable shock and vibration. Important, also, was the ease with which the mounting stud could be fabricated.

R. J. Allen, Advanced Design Engineer, The Martin Co., Baltimore, Md.

Masonite Sheets + Phono Jacks + Holes = Patch Board

A low-cost patch board, suitable for laboratory set-ups or for breadboard work, was easily built from common, readily available materials.

The patch board consisted of two pieces of tempered hard-board with holes at half-inch intervals. Connector jacks are sandwiched between the two boards, bolted together as shown in the figure. The board material is masonite pegboard, 1/8 in. thick, tempered on both sides, with 7/32 in. diam holes on a 1/2 in. grid pattern. This material can be bought at a neighborhood lumberyard. The temper is desirable for appearance, as well as to prevent erosion of hole edges from contact wear.

The female connector sandwiched between the two boards is the contact device used in the RCA type phono jack. The connectors are held in place between the two boards by the overhanging lip of the connector. A thin spacer, such as a plain washer, should be used on the bolts which hold the two boards together. This spacer insures that the boards will not bind the jacks and hamper their spring action. Patch-cords are made from RCA type phono plugs. In bread-board use, components are mounted on small plug-in strips.

If desired, a simple "L" shaped extruded aluminum frame can be made for the unit, although adequate support for laboratory use can be provided with long bolts in the four corners. Larger-than-normal components can be mounted on banana plugs for mechanical support, with flexible leads tipped with phono plugs for electrical contact.

Using the banana plug and a single pegboard, displays of small assemblies and units can be readily set up. Mounting of the units with banana plugs allows easy removal of the assemblies for closer inspection.

M. I. Arbogast, Projects Engineer, RCA, Camden, N. J.

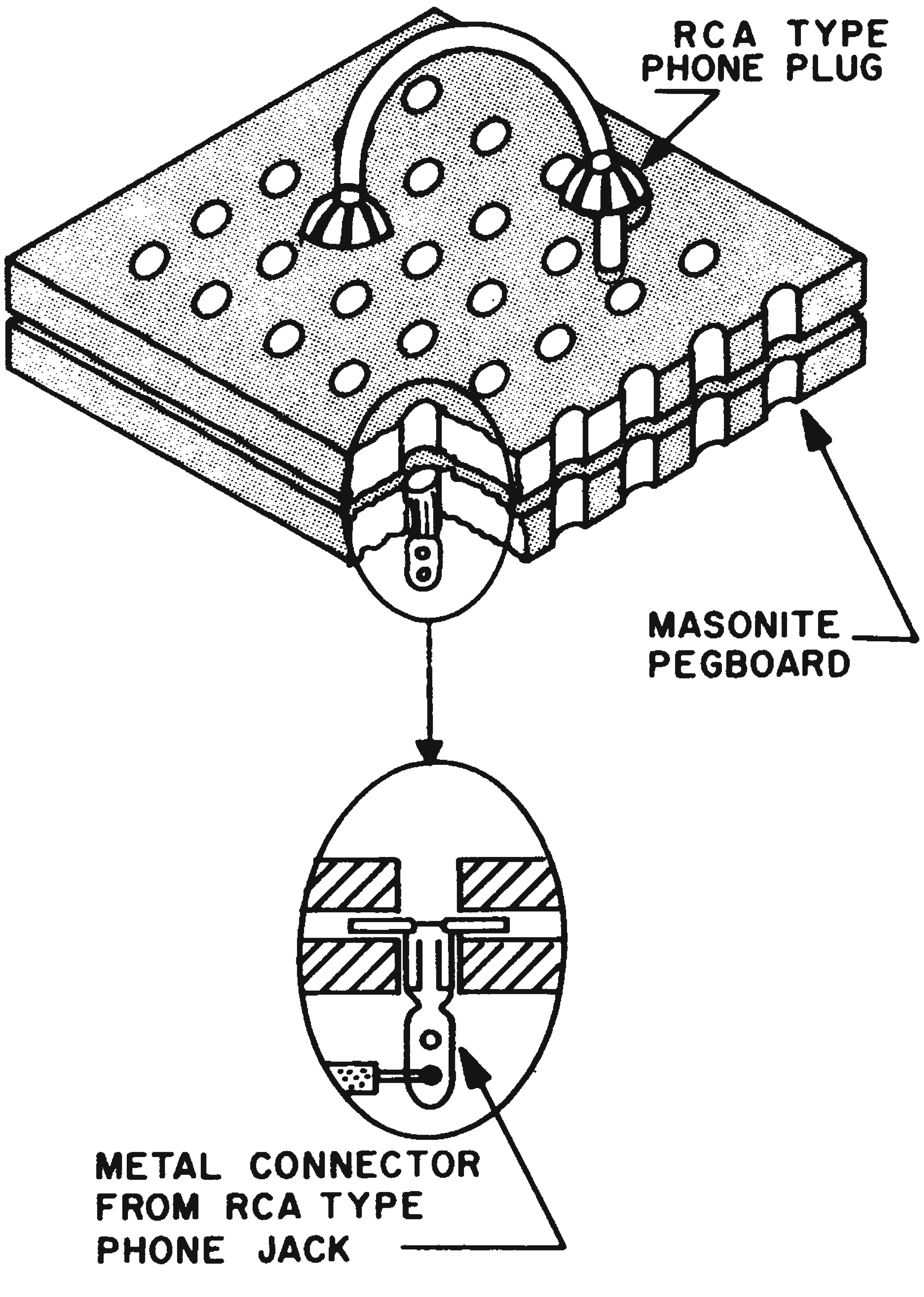

A laboratory patch board can be easily built from two pieces of masonite pegboard and phono jacks. The female connectors are sandwiched between the boards and connections are made with phono plugs.

Effect of Feedback on Gain Shown in Design Chart

A nonlinear amplifier can be made more linear by inserting degenerative feedback. Unfortunately, a loss in gain is associated with the improved linearity. A handy relationship between the achievable linearity and the inherent gain reduction is derived here. Also, a design chart depicting this relationship is presented.

In the region of interest, the maximum and minimum values of gain are defined as A_2 and A_1 respectively.

When a constant feedback coefficient, B, is placed around the amplifier, the new limits of gain are

$$A_{fb_1} = \frac{A_1}{1 + A_1 B}$$

$$A_{fb_2} = \frac{A_2}{1 + A_2 B}$$

$$A_{fb_1} < A_{fb} < A_{fb_2}$$

In terms of A_{fb_1} and A_1 or A_{fb_2} and A_2, it can easily be shown that

$$B = \frac{1}{A_{fb_1}} - \frac{1}{A_1} = \frac{1}{A_{fb_2}} - \frac{1}{A_2}$$

Rearranging the preceding equation produces the following desired relationship. It states that a reduction in the gain deviation by a factor of x

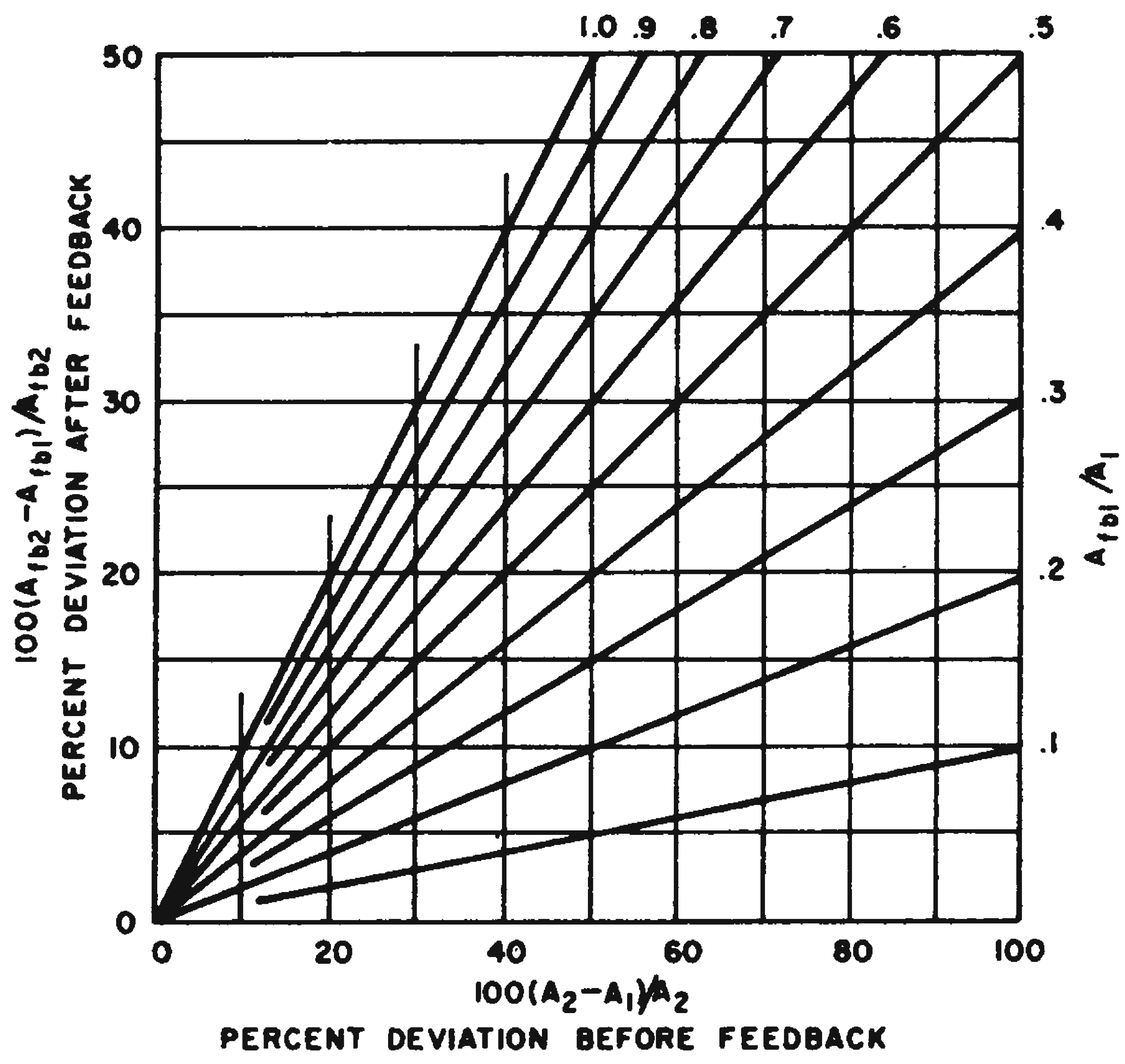

can be accomplished by decreasing the lower gain limit with degenerative feedback by the same x factor.

$$\frac{(A_{fb_2} - A_{fb_1})}{A_{fb_2}} = \frac{(A_{fb_1})}{A_1} \cdot \frac{(A_2 - A_1)}{A_2}$$

The design chart above plots this equation in percentage of gain deviation before and after feedback, with the ratio A_{fb1}/A_1 as a parameter.

D. A. Pierre, Member of the Technical Staff, Hughes Aircraft Co., Los Angeles, Calif.

Component Tolerance Calculator Can Be Built Into Your Slide Rule

When calculating the worst-case conditions of a circuit it is often necessary to multiply or divide parameters with their tolerances and to obtain the extreme values of the result. But, by adding two cross hairs to the glass slider of the slide rule, the extremes may be read at the same time as the nominal value.

The extra lines are placed according to the principle that moving along a log scale a fixed distance is the same as multiplying or dividing by a constant factor.

For 5 per cent components one cross hair is located at twice the distance from the index to 1.05 and the other is located at twice the distance from the index to 0.95.

For 10 per cent components the same slider may be used on the A and B scales.

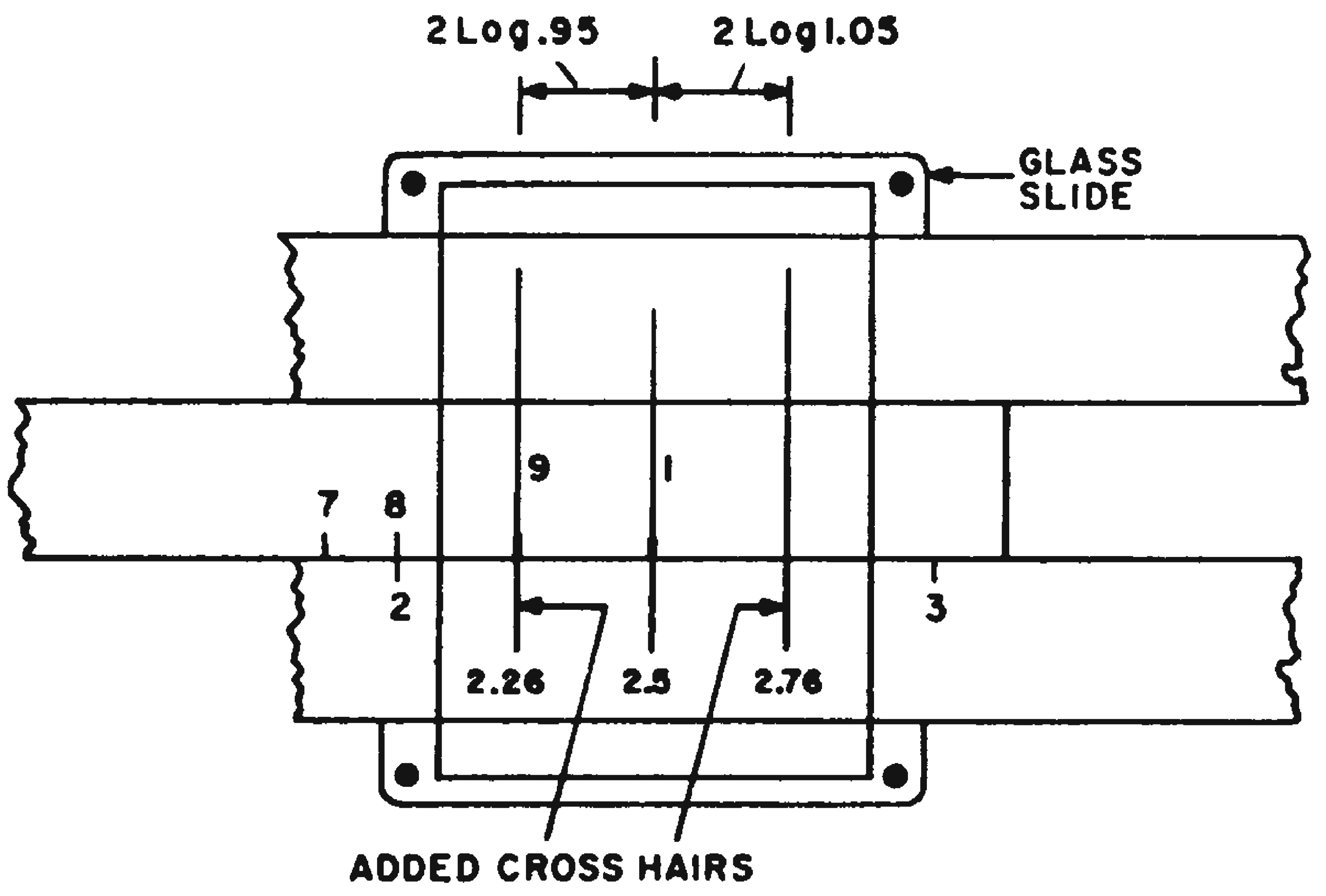

Added cross hairs drawn on glass slide are placed to indicate extreme values when divided numbers have ± tolerances. Illustration shows settings for 2 ±5% / 8 ±5%.

A slider scale calibrated at log 1.02, 1.04, 1.06, etc., would be more useful. The answer tolerance would be read at the line indicating the sum of the component tolerances.

To use this device the calculation is performed with the nominal values. Then, with the slider hair line on the answer, the extreme values appear under the added cross hairs.

Bruce Ross, associate research engineer, The Boeing Co., Seattle, Wash.

Amplitude Control in DC-Coupled Circuit Holds DC Level Constant

Usually if a potentiometer is used to pass on an amplitude variation in a dc-coupled amplifier, the average dc level will also change. To prevent this the arrangement shown in the figure has proved to be quite effective.

Point A is varied until it is at 0 v dc. Then any variation in R_2 will only affect the amplitude of the ac signal and not the dc level. R_2 can be much larger than R_1 so that the full amplitude at the cathode can be utilized. However, the designer must choose between the increased output impedance and the larger useful amplitude.

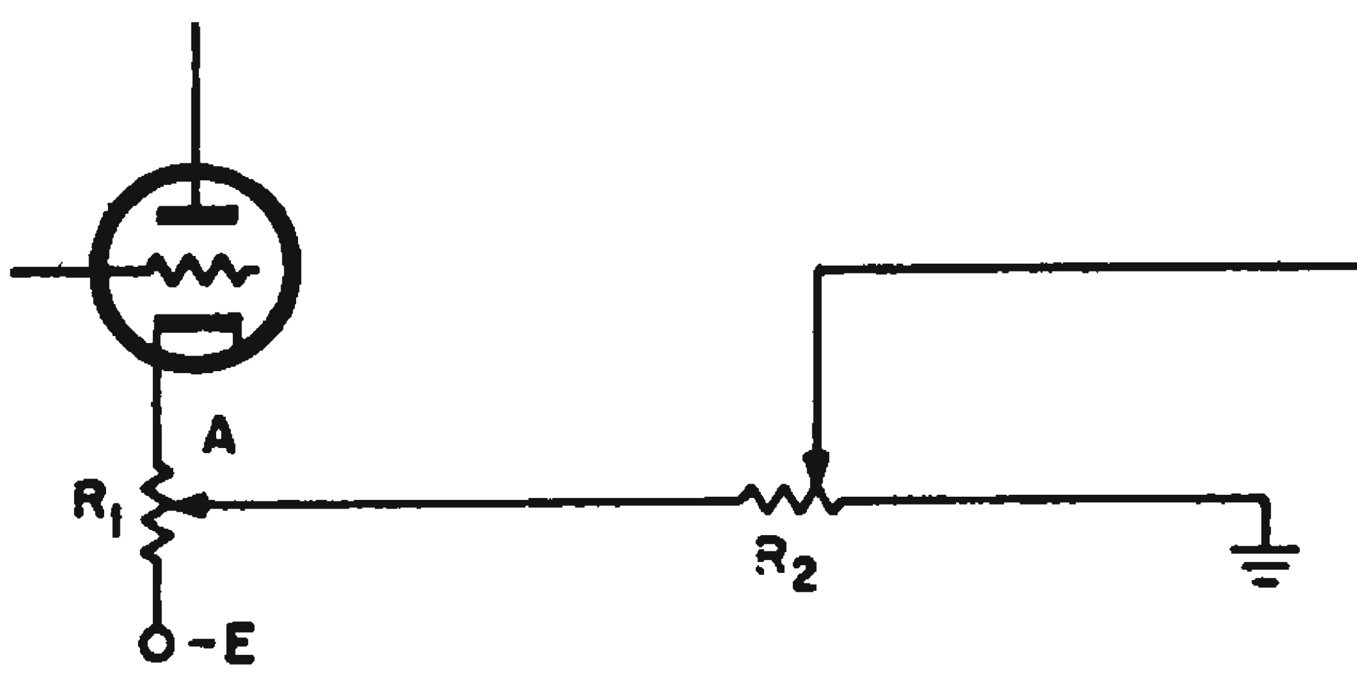

Setting point A to 0 v dc allows signal amplitude to be attenuated without any change in its dc level.

Irving Bayer, senior member, technical staff, Radio Corp. of America, New York, N. Y.

Experimental Circuits Provide Negative Resistance

Various combinations of transistors and Zener diodes can provide an interesting, and perhaps useful, variety of outputs. The two-terminal circuit shown in Fig. 1a has unique negative resistance properties. As voltage is increased across its terminals, Q_1 conducts heavily through R_1. Base current of Q_1 is limited only by R_2. However, the base current of Q_2 through R_3 also increases, decreasing the emitter-collector drop of Q_2. Eventually this drop becomes smaller than the emitter-base drop of Q_1, and Q_1 shuts off. During this latter phase the circuit exhibits negative resistance properties, and the total current decreases as the applied voltage increases.

By inserting a nonlinear component in series with R_3, the Q_2 base current will increase faster, resulting in a steeper slope in the negative resistance region, as in Fig. 1b. Ratios of peak-to-valley current can be as high as 160.

The **characteristic curve of Fig.** 2 can be obtained by substituting a second Zener diode for R_1. The Zener voltage of this diode should be close to that of the first one. When applied voltage is increased, the current is almost constant until the Zener voltage of CR_2 is reached. The current rises sharply until the Zener voltage of CR_1 is reached and then drops back to almost the previous value. The dashed-line characteristic is obtained by replacing CR_2 with a Zener diode having a slightly lower Zener voltage.

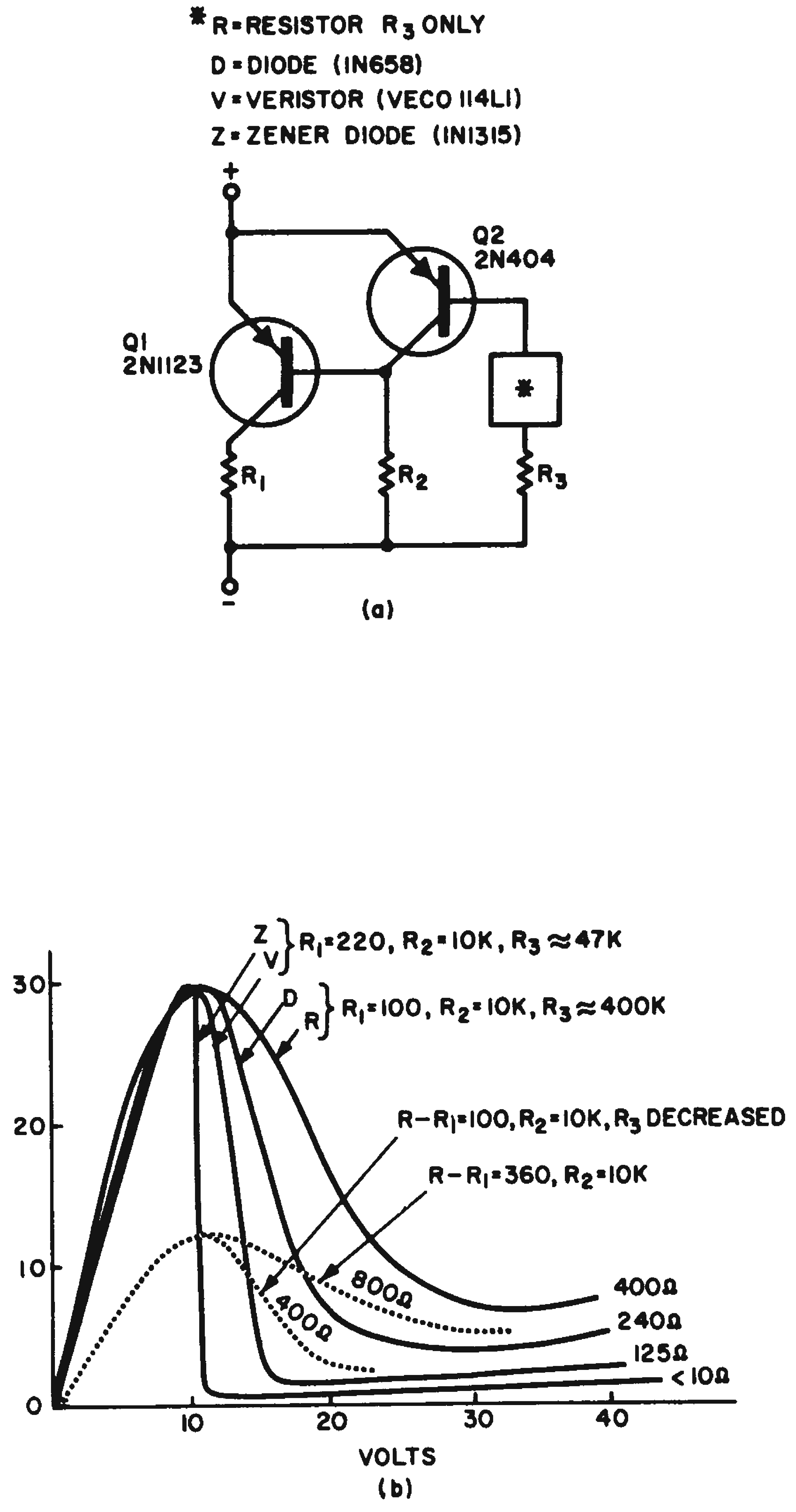

Fig. 1. Nonlinear element in series with R_3 determines negative resistance characteristic of device.

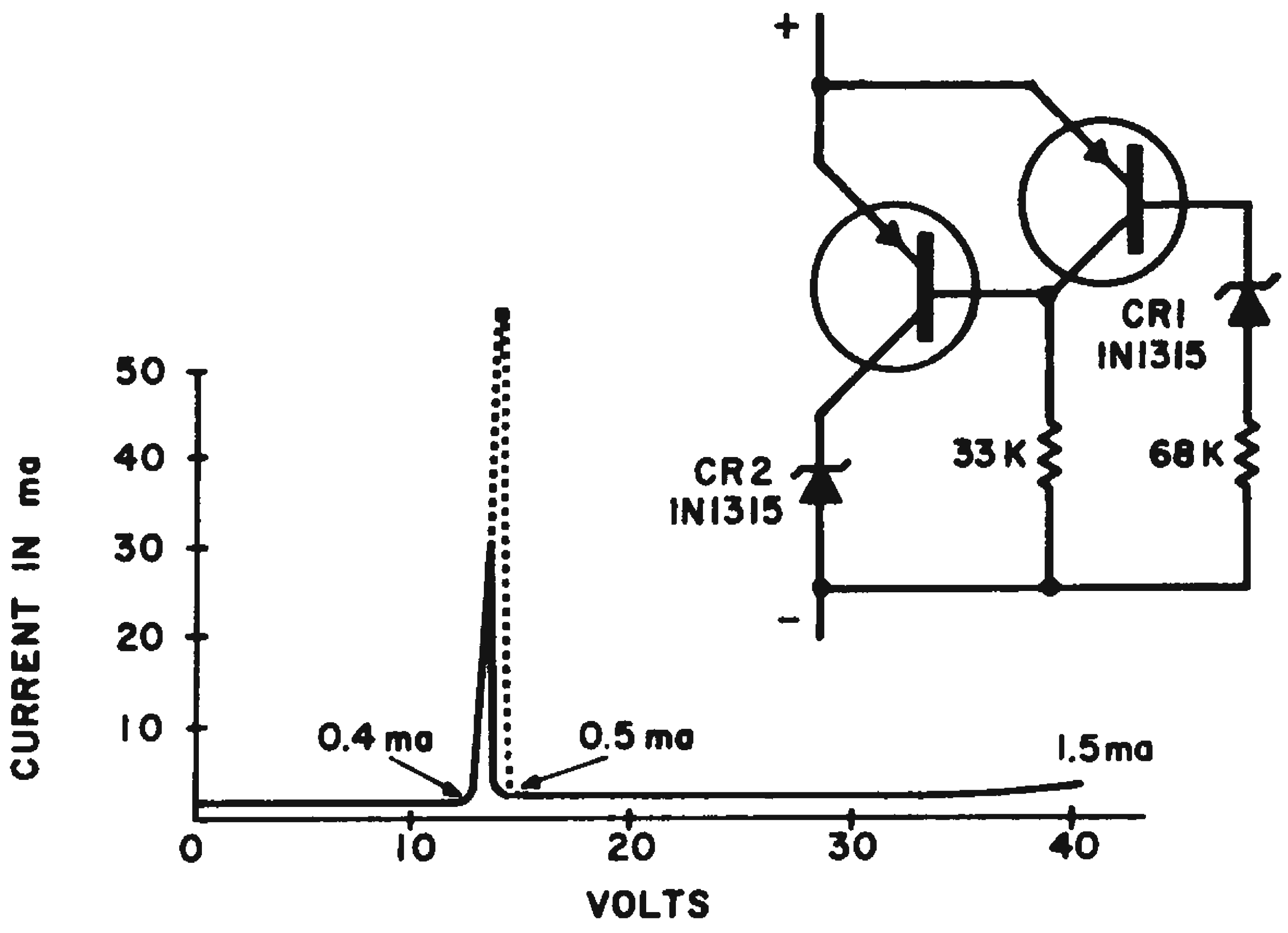

Fig. 2. Sharp peaked output is obtained by replacing R_1 with Zener diode.

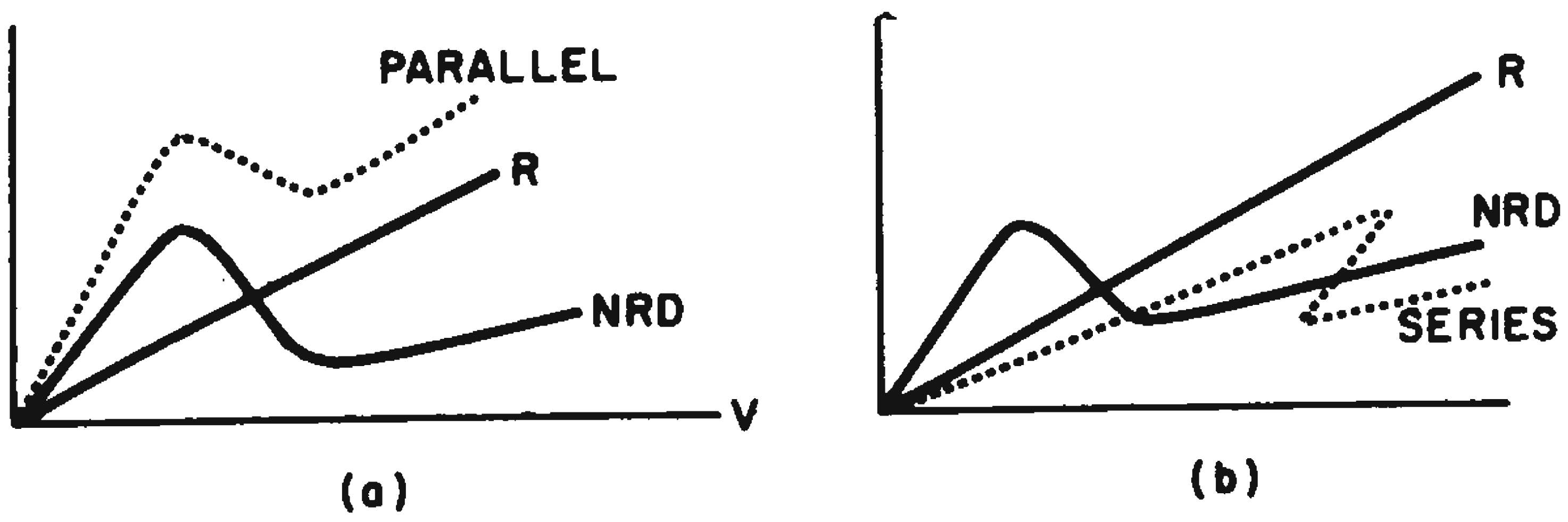

Fig. 3. Parallel (a) and series (b) curves obtained with negative resistance device and resistor.

The dynamic negative resistance can be increased by putting a resistor in parallel with the negative resistance circuit. This is shown in Fig. 3a, where the composite characteristic (dashed curve) of a resistor in parallel with a negative resistance device has been constructed graphically by superimposing the two individual characteristics.

The series combination, dashed curve in Fig. 3b, is found by superimposing the individual characteristics in the horizontal direction.

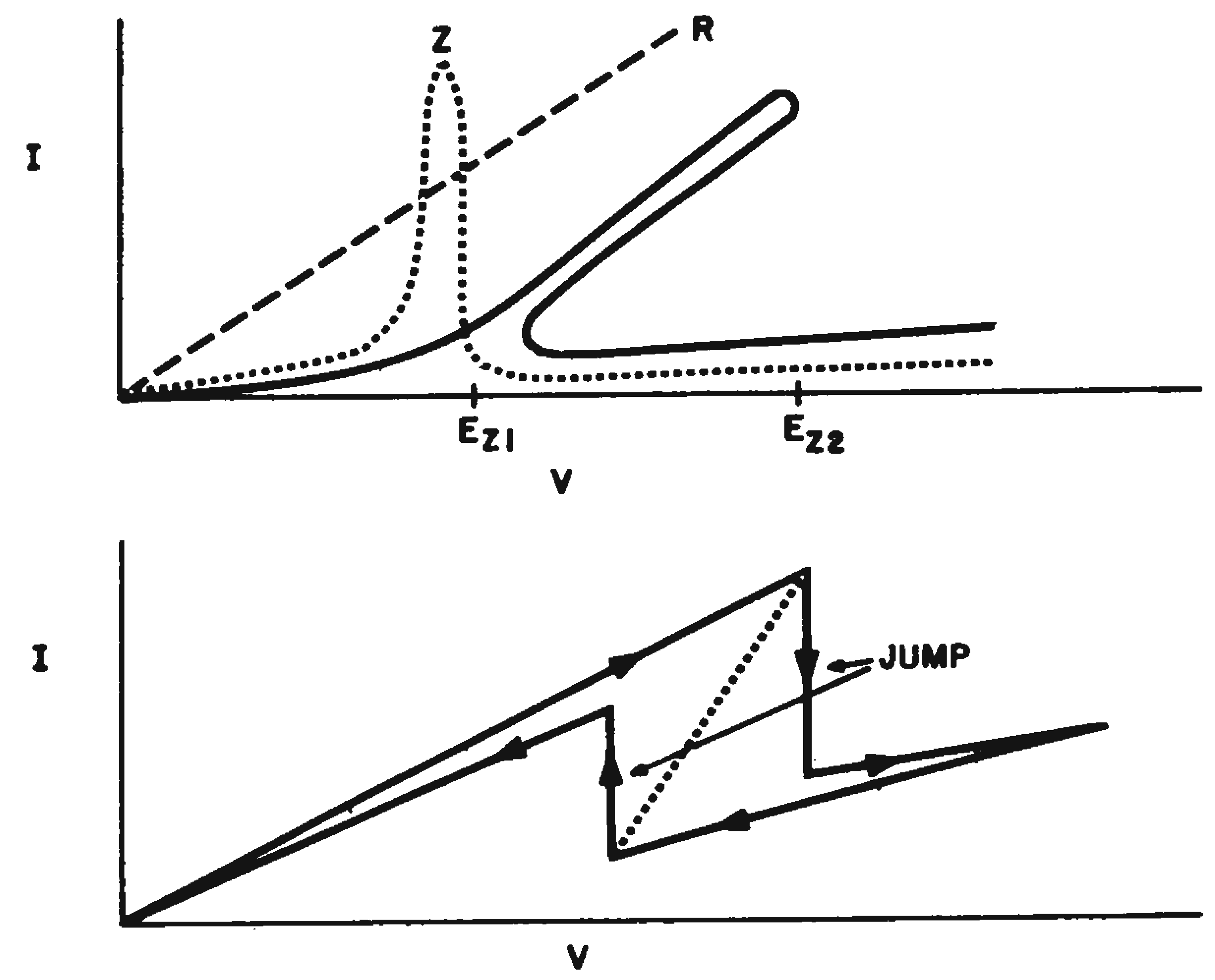

Fig. 4. Current path for series circuit (a). Unusual curve (b) is obtained by putting resistor in series with circuit of Fig. 2.

The significance of the odd-shaped curve for the series combination is indicated in Fig. 4a. If applied voltage is increased and then decreased, the current will vary as shown. Finally, adding a resistor in series gives the characteristic shown in Fig. 4b. The circuit acts as a resistor only after reaching E_{Z2}, then stops after reaching E_{Z2}.

G. Richwell, staff engineer, Reflectone Electronics, Inc., Stamford, Conn.

Jury-Rig Coil Winder Employs Pencil Sharpeners

The device shown here proved to be a real time saver in winding a number of coils, each having several thousand turns.

It was constructed from two pencil sharpeners (one electric and one mechanical), a dowel rod, two laboratory stoppers, and a bit of plastic tape.

While one person feeds the wire from a spool onto the coil form, another man keeps track of the number of turns by counting the revolutions of the moving handle.

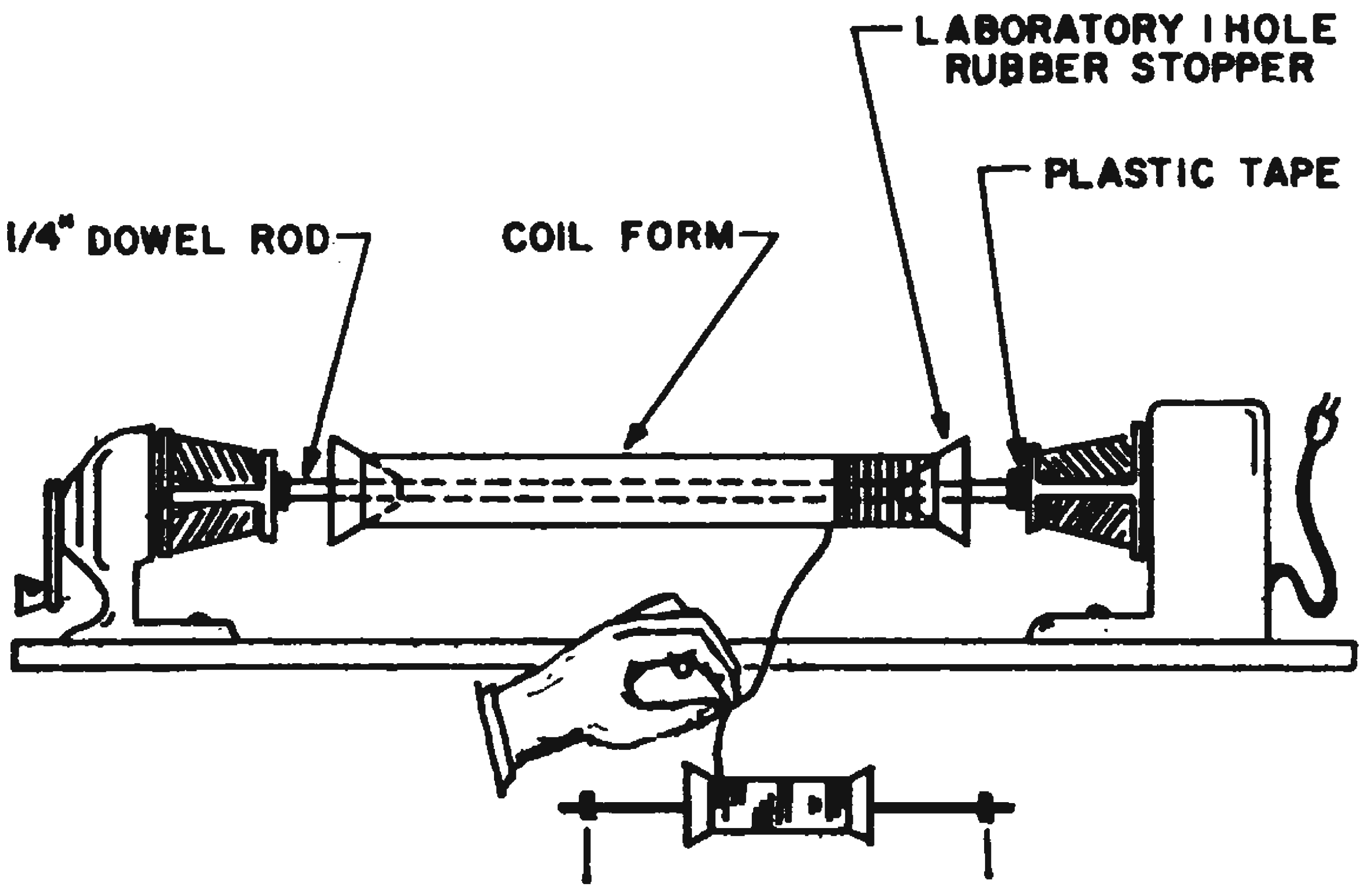

Coil winder employs electric pencil sharpener as driver unit.

R. M. Slater, electronic engineer, Tennessee Valley Authority, Div. of Electronics Design, Knoxville, Tenn.

Wirewrap Pattern Charge Simplifies Circuit Alterations

Wirewrap connections usually have the leads arranged as in Fig. 1a. Since it is difficult to replace a wirewrap, it is sometimes necessary to disconnect 5 to 10 leads in making a wiring change.

If the wiring order is arranged so that the end product is as shown in Fig. 1b, no more than three leads need be removed for any desired change.

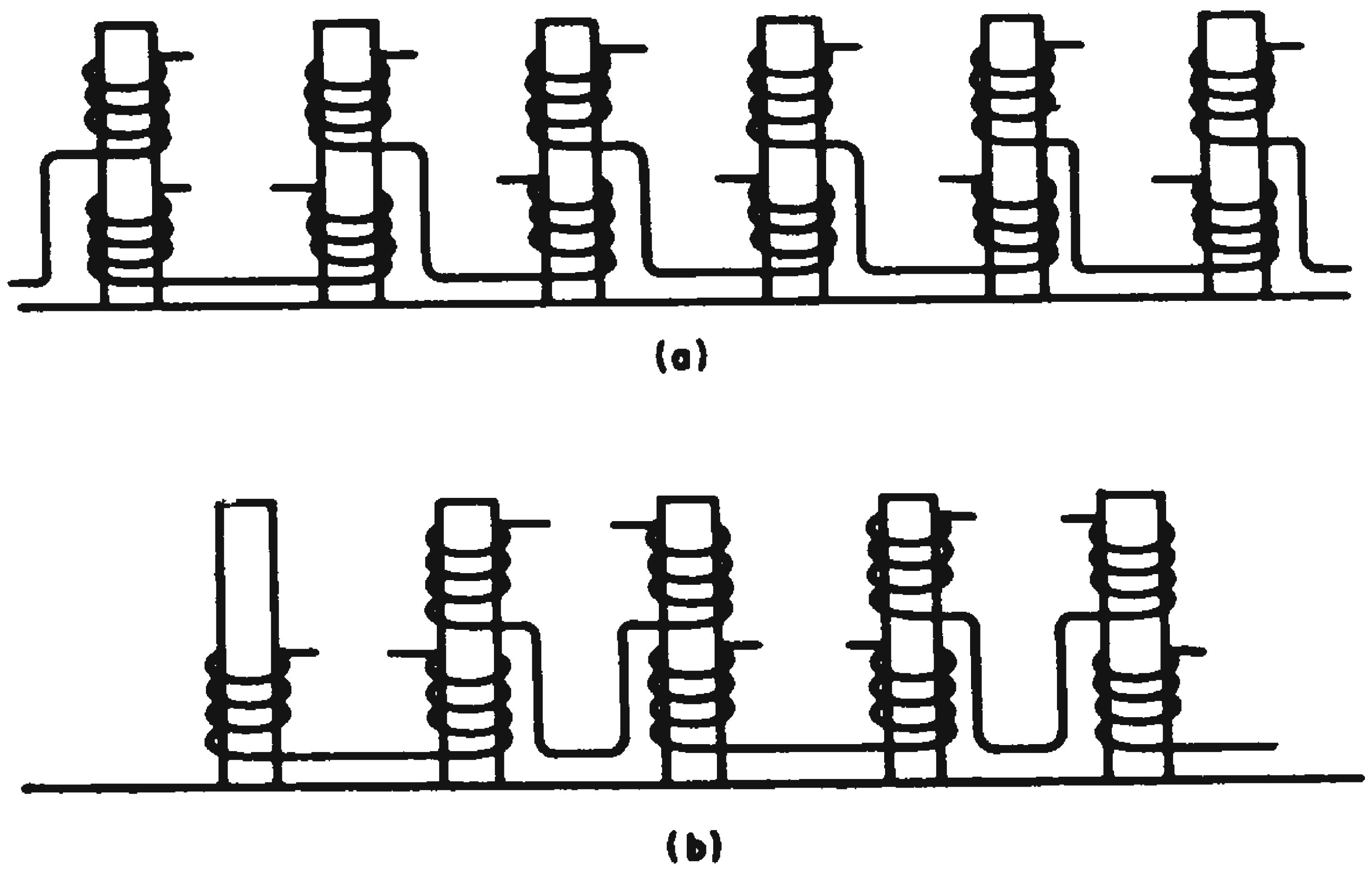

Fig. 1. Changing wire wrapping procedure from (a) to that in (b) reduces the number of leads that must be removed in making wiring changes.

Irving Bayer, Radio Corp. of America Surface Communications Div., New York, N. Y.

Heat-Conducting Wafers Dissipate Heat in Micromodules

The heat-dissipating ability of micromodule package designs can be considerably increased by building into the package wafers whose sole function is to transfer heat.

These wafers can be placed in the package in close proximity to the heat-producing components. They are made slightly over-size so that their edges protrude through the outer package.

The wafers absorb heat produced within the package and conduct it to their outer edges. There, the heat is either released into the air or conducted down through the supporting wires. Or, the wafer edges can be contacted by an over-all package heat sink.

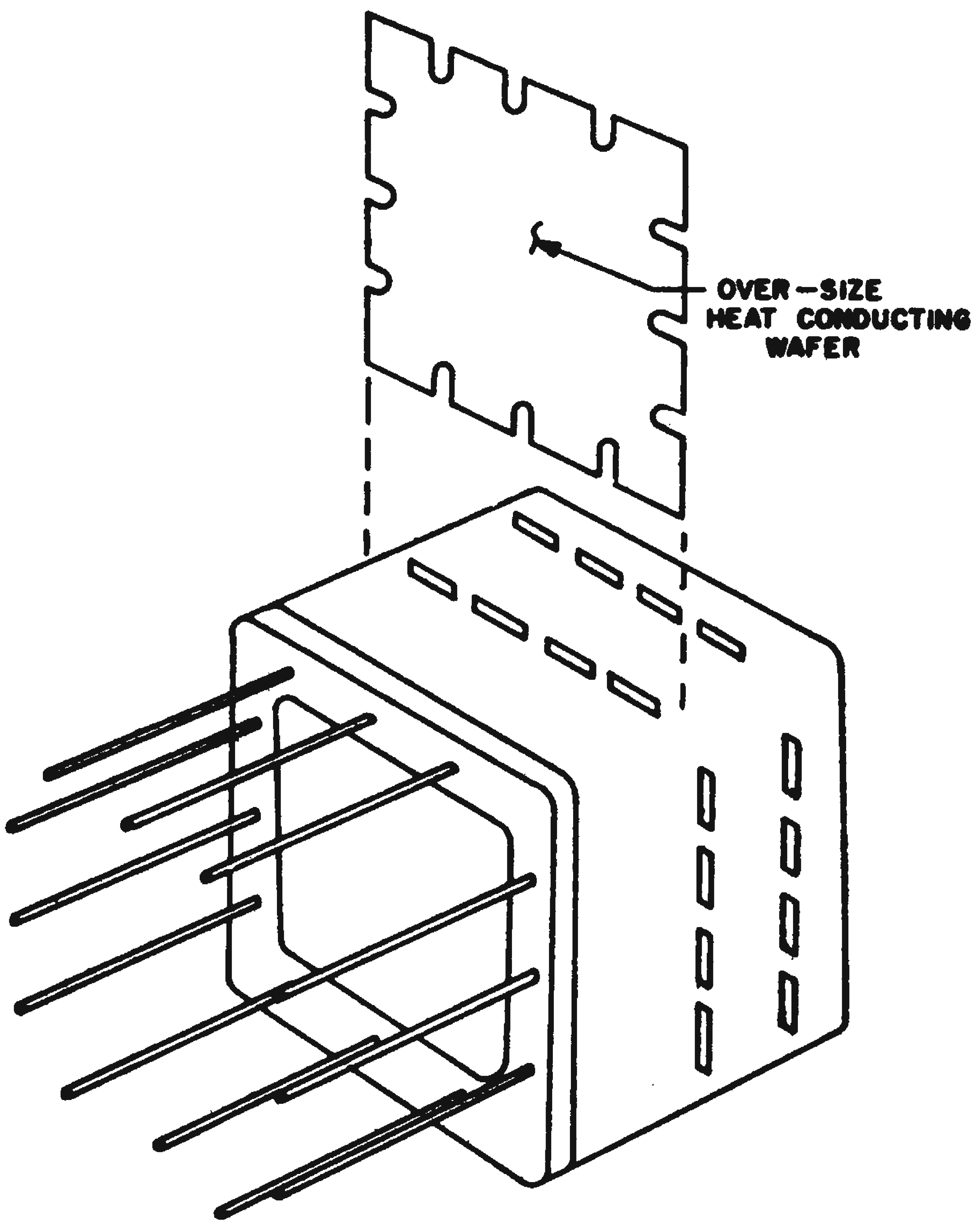

Oversize heat-conducting wafers, made of materials such as Berlox (BeO), can be added to micromodules to increase their ability to dissipate internal heat. Wafer conducts heat from interior of package.

The wafers can be made from materials such as Berlox (BeO). This material has good heat conductivity and high insulation qualities. It can also be readily formed or molded into thin (0.020 in.) wafers.

Donald J. Abel, Section Head, Du Mont Military Electronics Div., Fairchild Camera & Instrument Corp., Clifton, N.J.

Small DC Capacitors, Diodes Form Equivalent AC Unit

The next time you need a large ac capacitor but are restricted to a small space, here's a rig you can try.

By using two equal dc capacitors and two diodes you can squeeze a large capacity and high working voltage into an area smaller than that required by an equivalent ac capacitor.

Referring to the figure, when terminal A is positive-going with respect to B, diode D_2 conducts, shorting and protecting capacitor C_2 from reverse current. Diode D_1 is open-circuited and capacitor C_1 charges.

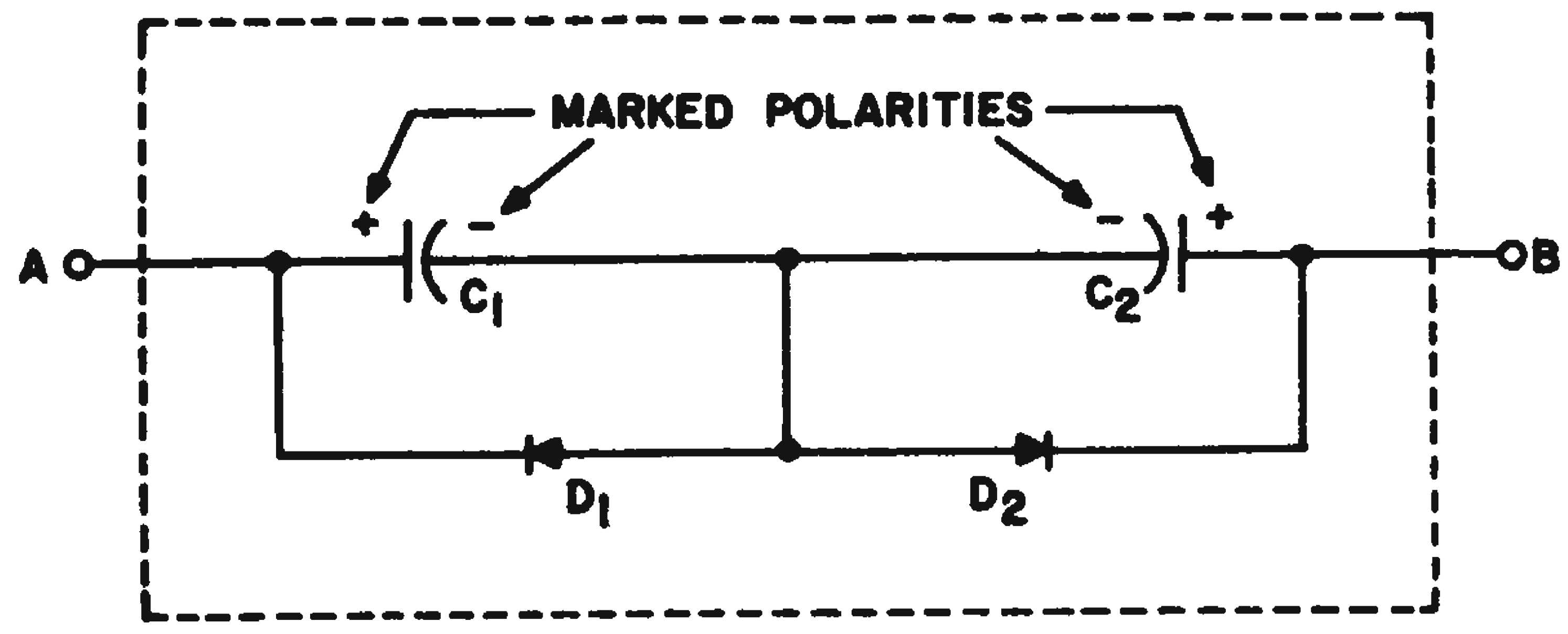

Small-size dc capacitors are combined with ordinary diodes to yield relatively smaller ac unit.

When terminal B is positive-going with respect to A, diode D_1 conducts, shorting and protecting capacitor C_1 from reverse current. D_2 is open-circuited and capacitor C_2 charges.

Since only one capacitor is used in the circuit at a time, the equivalent ac capacitance of the circuit will be equal to the dc capacitance of a single dc capacitor instead of one-half the value, which would be the case if the diodes were removed. The circuit could also be used with tantalum capacitors. This would save quite a bit of money since ac tantalum units are much more expensive than dc.

Ronald Silver, Engineer, Philco Corp., Philadelphia, Pa.

Tweeze Your Way to Ring-Free Circuits!

High-frequency ringing caused by lead inductance is often hard to trace in prototype designs. A clip-on "ring-tracer" was made that increases the inductance of the lead in question, and increases the amplitude and lowers the frequency of the ringing. The results can be observed on an oscilloscope.

The device, shown in the figure, is made from a pair of tweezers whose pointed ends have been ground off. A ferrite core (anything from a 0.08 in. memory core to a 0.25 in. torroid will do) is then broken in half with two pairs of pliers. The jagged edges are mated and the core is glued between the blunted tweezer ends which are held by rubber bands until the glue dries.

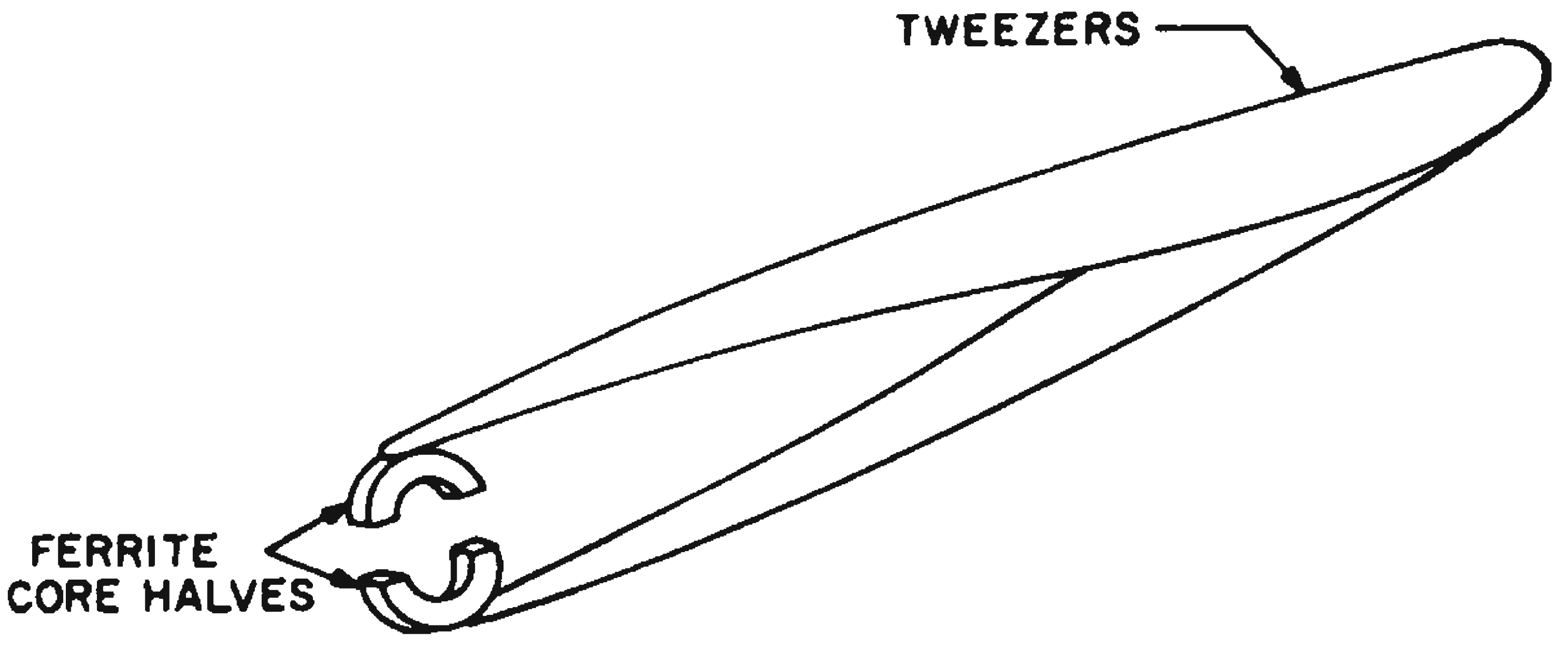

Ferrite core is tentatively "tweezed" on to circuit leads to determine where lead inductances cause ringing.

To use, place the wire between the core halves and squeeze the tweezers.

Ralph C. Johnston, Staff, Lincoln Laboratory, Massachusetts Institute of Technology, Lexington, Mass.

Metal Foil Sticks To Tube, Conducts Heat

Heat can be rapidly conducted from the glass walls of a vacuum tube by applying a recently developed, adhesive-coated metal foil wrapper. Available through Shawmut, Inc., of Brockton, Mass., the wrapper can be formed to fit snuggly around the tube and is held fast by a high temperature resistant adhesive. The thin layer of adhesive, which has a thermal conductivity many times that of air, holds the wrapper in intimate contact with the glass surface and eliminates the film of air present when an ordinary metal heat shield is used. A metal clamp can be used to support the tube and serve as a heat sink. In addition to improving the conduction of heat from all portions of the tube surface, the wrapper also acts as an electrical shield, while the adhesive film serves as a cushion to damp vibration and shock.

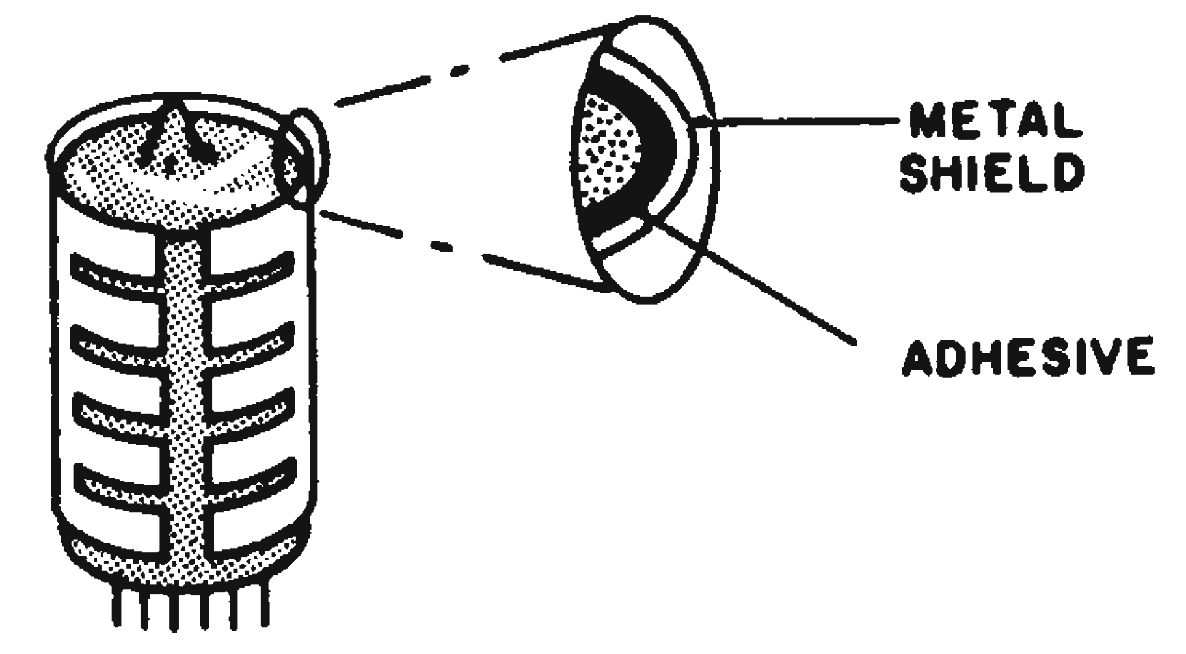

Metal foil sticks firmly to glass walls of vacuum tube, conducts heat away. Slits are made so that foil will stick tightly to irregular surface.

R. H. Wyner, President, Shawmut, Inc., Stoughton, Mass.; Dr. M. Mark, Consulting Engineer, Cambridge, Mass.

Grind Your Own "Precision" Capacitor!

Everyone knows you can "adjust" the resistance of a common carbon-composition resistor by filing through the body into the carbon until the precise resistance value is obtained. This is a helpful trick for experimental breadboarding.

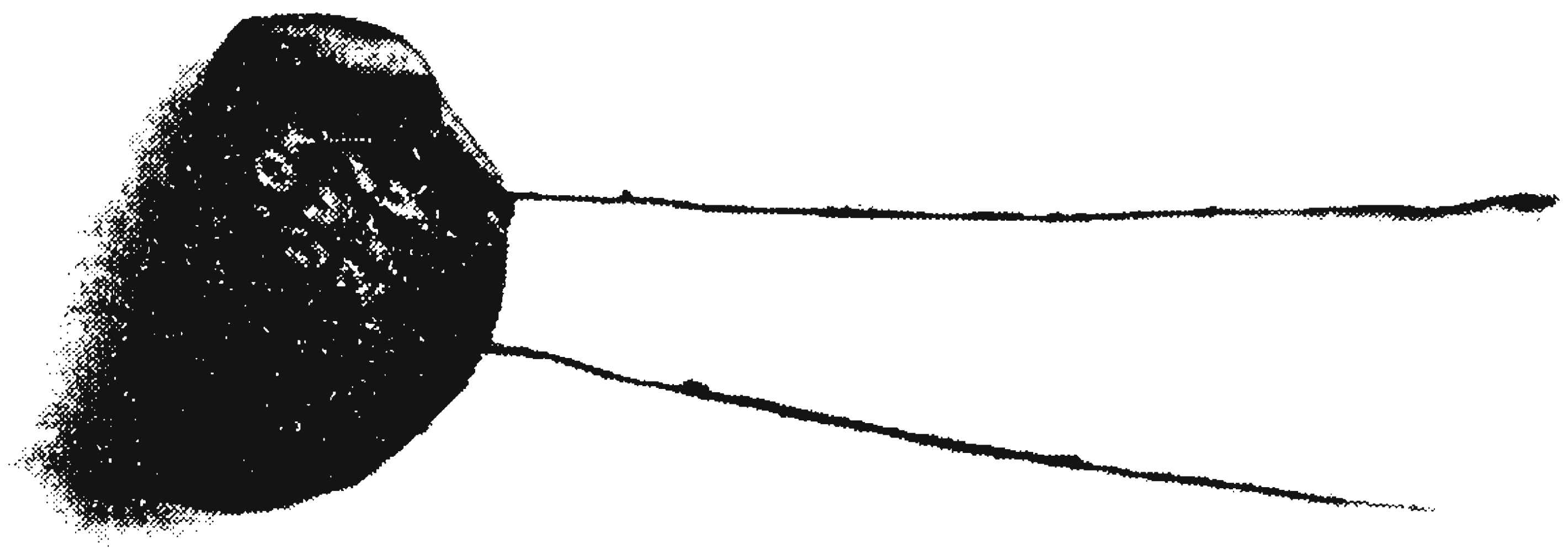

Value of ceramic disk capacitors can be trimmed down by grinding the capacitor away with a file or grinding wheel.

However, rather few realize that ceramic-disk capacitors can be ground down in the same way. The capacitors can be easily trimmed with a file or grinding wheel.

Thus, their capacitance can be trimmed down just as the resistance of a resistor can be trimmed up.

Al de la Lastia, Project Engineer, Universal Transistor Products Corp., Westbury, Long Island, N. Y.

Salvaged Tank Coil Yields Precision Potentiometer

A military surplus transmitter was the source of a precise, low-resistance balance potentiometer, capable of extra-fine adjustment, resolution and repeatability. The basic component of the pot was the adjustable tank coil taken from an ARC-5 transmitter.

These units can still be bought at retail, complete with tubes, for less than ten dollars—a small fraction of their original cost.

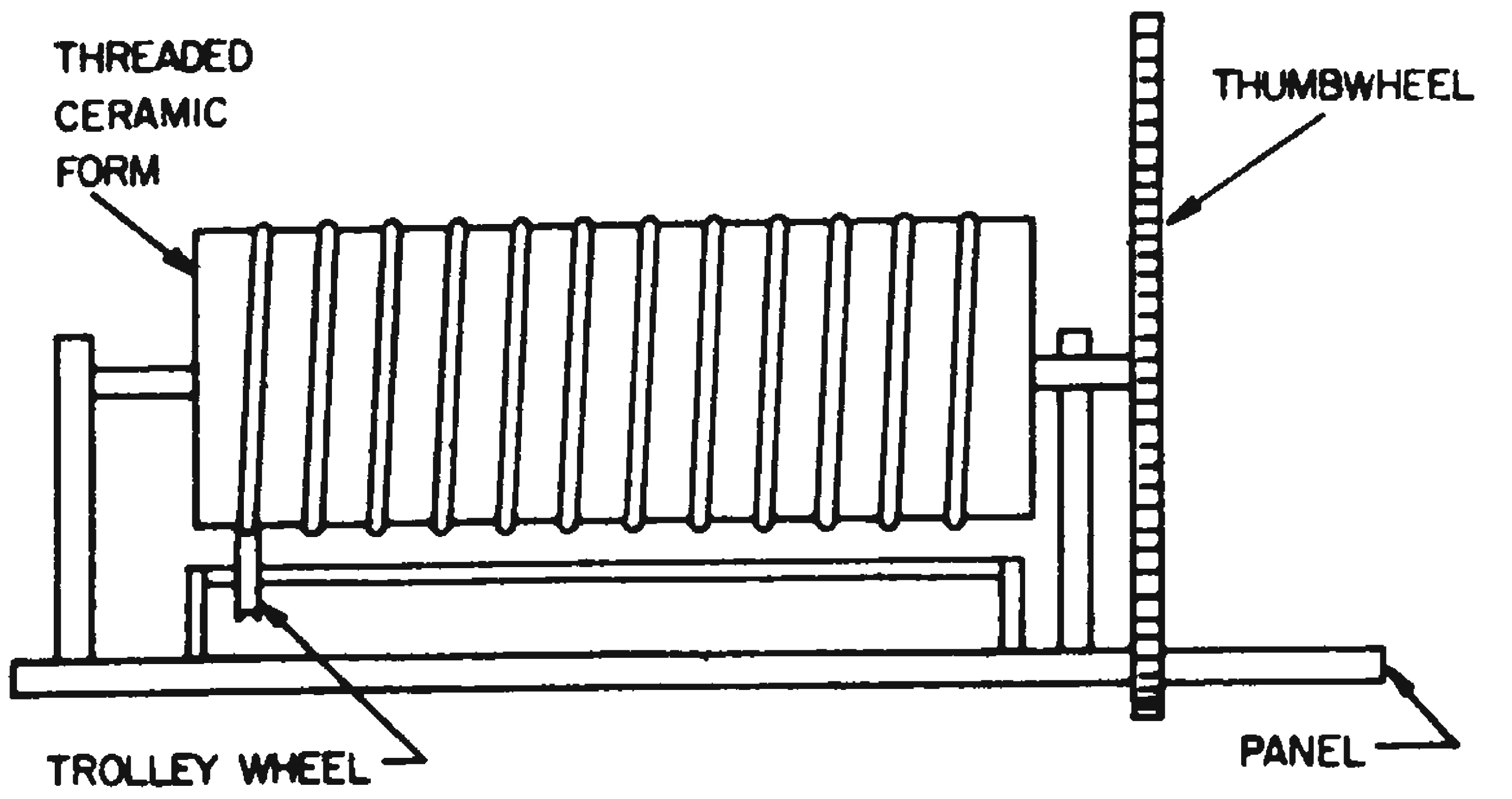

Fig. 1. Adjustable tank coil from ARC-5 transmitters can be converted into a precision pot. (Or, if the coil is unavailable, the pot can be built from the materials shown.)

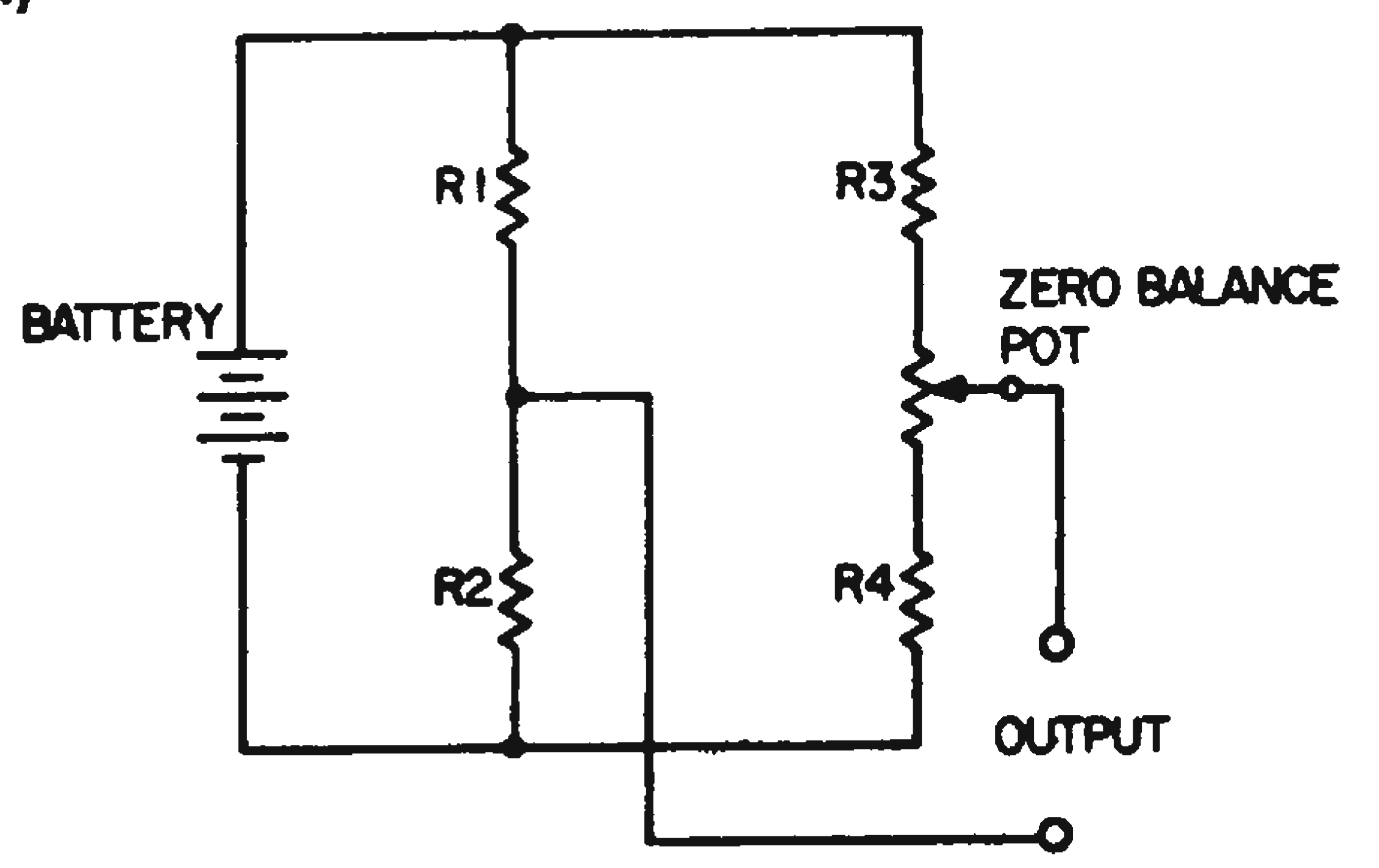

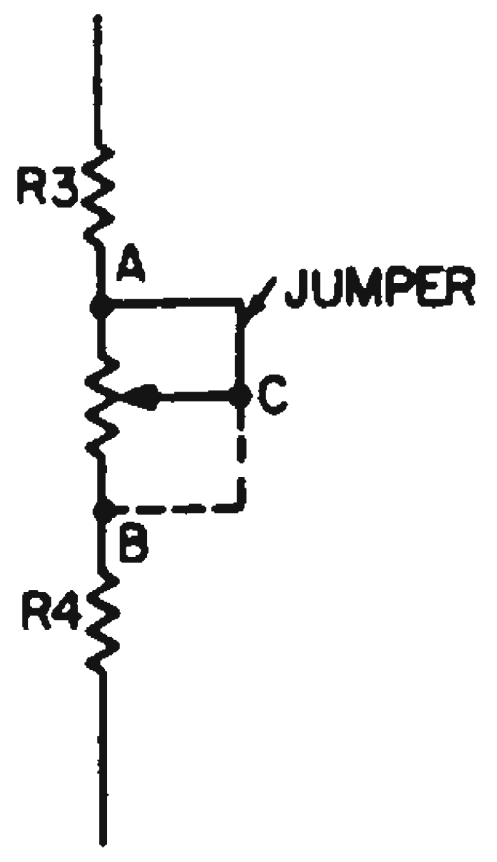

Fig. 2. If pot does not have sufficient range for zero-balancing, Wheatstone Bridge can be modified as in (a) or as in (b). Jumper is connected from either *A* to *C*, or from *B* to *C*, whichever permits the Bridge to be balanced.

The tank coil, Fig. 1, is wound on a threaded ceramic form 2 in. in diameter by 3-3/4 in. in length. A trolley wheel, riding on a guide bar, makes continuous contact with the wire on the coil. There is no jumping from turn to turn, as in the potentiometer of conventional construction. The thirty-odd turns on the coil form are the equivalent of a slidewire some 18 feet long!

If, when used in a Wheatstone-bridge circuit, the improvised pot does not have sufficient range for zero-balancing, the copper wire may be removed and replaced with wire of suitable resistance. Before changing the wire, however, one should try balancing the bridge with the pot connected first as in Fig. 2a or as in Fig. 2b.

Joseph Leeb, Project Engineer, Engelhard Industries, Inc., Paramus, N.J.

Printed Wire "Plug-In" Cards Reduce Number of Card Types

The variety of printed circuit cards required in an electronic system can be reduced by using a "plug-in" wire card—a printed wiring card having projecting taper pins, Fig. 1. By inserting this printed wire between various points in a basic printed-circuit layout, the card can be rearranged into different circuit configurations.

An example of how these plug-in cards are used is shown by the basic printed circuit layout, Fig. 2, designed for the two amplifier circuits of Fig. 3. The only difference between the two circuits is the coupling arrangements between the tube plates and suppressor grids.

By inserting plug-in wire cards of the proper length between points *a* and *d* and points *b* and *c* on the basic wiring card, the circuit of Fig. 3a is completed. By removing these and inserting printed wires between points *c* and *a* and points *b* and *d*, the circuit of Fig. 3b is completed.

Where complex circuits are used, a good amount of thought must be given to the basic printed design of the circuit layout. The eyelets as shown in Fig. 2 can be evenly spaced to provide equal lengths of printed wires. It is also feasible to plug one printed wiring card into

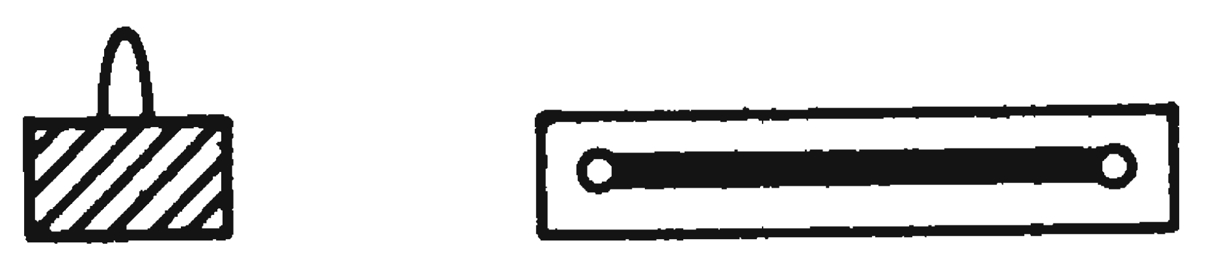

Fig. 1. Wire printed on a card can be plugged into printed-circuit card to alter circuit configuration.

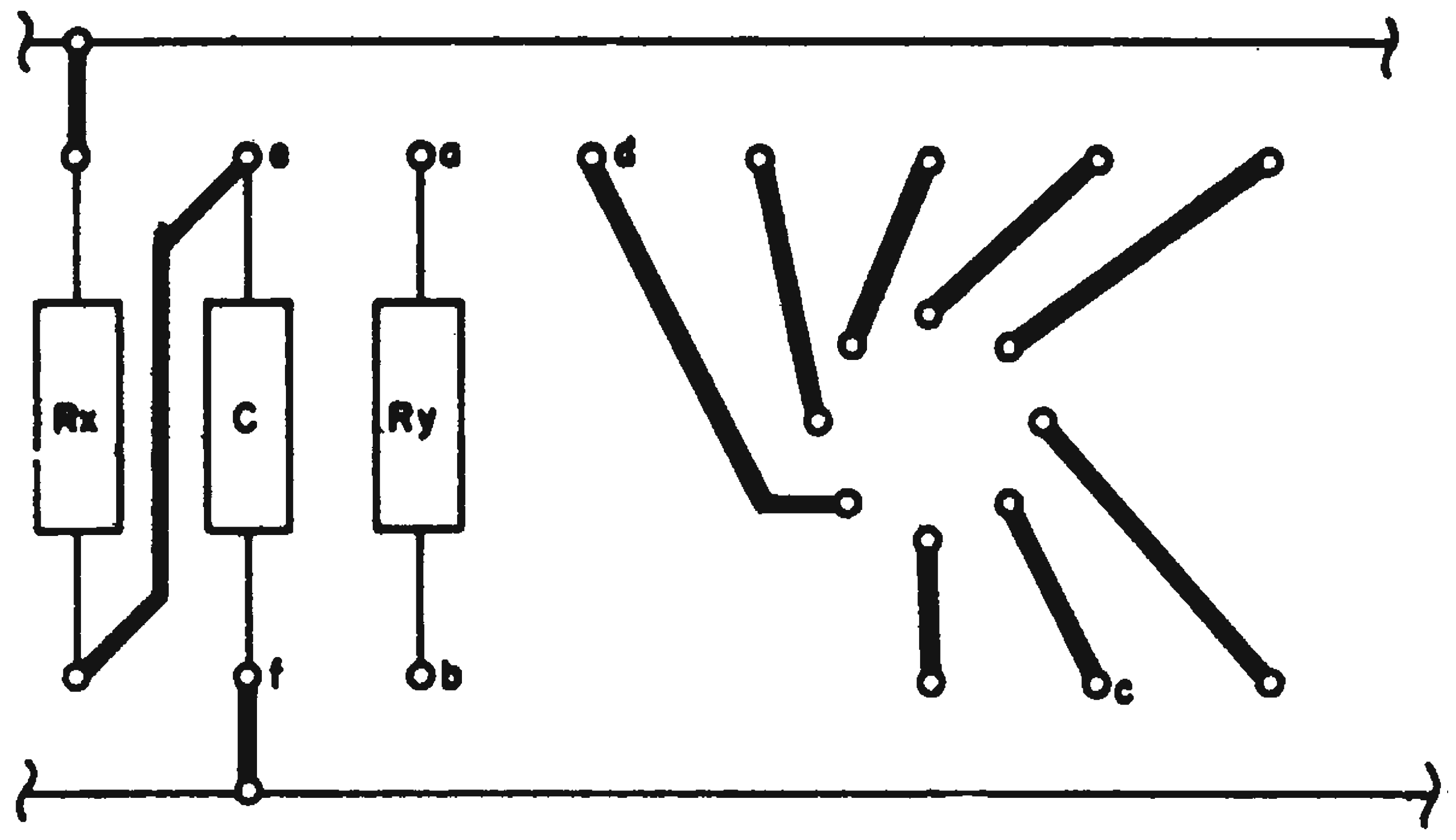

Fig. 2. Slightly different amplifier stages can be laid out on a single, basic printed-circuit card. Circuit configuration can be altered by inserting the proper printed wire plug-ins.

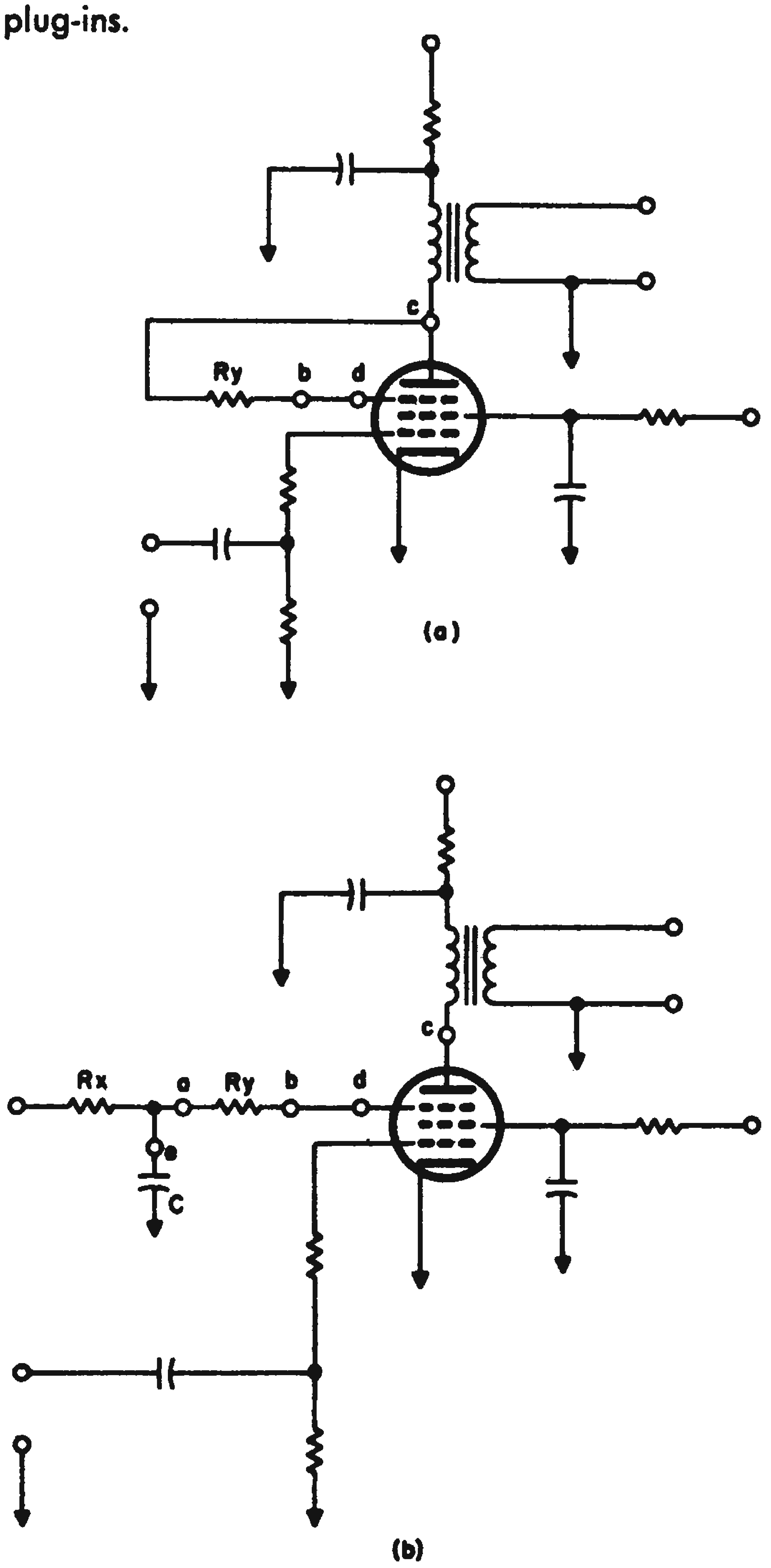

Fig. 3. Almost identical amplifier stages differ only in connections of plates and suppressor grids. Circuits are laid out as in Fig. 2.

another. This connection method does not require soldered joints. The taper of the pins is sufficient to provide the mechanical and electrical contact.

Ralph S. Gootner, International Business Machines Corp., Federal Systems Div., Kingston, N.Y.

Memorized Data Generate Complete Wire Tables

Complete copper wire tables can be developed from memory using a simple relationship. With the aid of a slide rule, the designer can obtain answers accurate to 5 per cent. The key step is to remember that #40 copper wire has 1 ohm per foot resistance and a cross-section of 10 circular mils. Now observe the simple logarithmic variation of the quantities involved in the following table:

Wire Gauge	Ohms/ft	Cross-section in Circ. mils
#40	1	10
#30	0.1	100
#20	0.01	1000
#10	0.001	10000

Having organized these approximations, we can now find intermediate values. for example, suppose we want to know the resistance per foot of #26 wire. The value obviously lies between 0.01 and 0.1 ohms/ft. By letting the 0.01 be represented by the left-hand extremity of the *C* scale of a slide rule, and the 0.1 by the right hand extremity, we can set 6 on the log scale and read the answer from the *C* scale as 0.04 ohms/ft. Cross section in circular mils can be obtained by a similar process. Wire diameter is obtained simply by taking the root of this cross section.

Skill in estimating logarithms can reduce all this to a mental process. The values given are for copper at 20 *C* and are accurate to within 5 per cent.

Gene R. Feaster, advisory engineer, Westinghouse Electric Corp., Elmira, N. Y.

Wire Table Gives Quick IR Drop Data

In the design of low voltage, high-current transistor equipment, wiring voltage drops, even within a small chassis, may not be negligible. To facilitate the calculation of IR drops in small wires, note that the standard dimension for wire resistance, "ohms per thousand feet" is exactly equal to "millivolts per ampere-foot." Example: What drop is produced in a four-foot length of No. 26 wire, carrying 0.5 amp? From the wire table,, the "ohms per thousand feet" is 40.81. Thus, the drop will be 81.62 millivolts.

Arthur G. Hansen, Jr., Armour Research Foundation of Illinois Institute of Technology, Chicago.

Chart Simplifies Transformer Design

The rms voltage per turn for transformer windings can be computed easily by means of a nomogram. The chart shown is based on the relationship:

$$\frac{E_{(RMS)}}{N} = 4.44 \times 10^{-8} \times f \times B_m \times A_{cs},$$

If the core cross-sectional area frequency (A_{cs}) of operation (f), and the desired driving flux level (B_m) are all given, the approximate induced rms voltage per winding turn can be obtained from the nomograph. As an example, assume the core cross-sectional area is 1.0 cm²; frequency of operation is 1.0 Kc and desired driving flux level is set at 15 Kgauss.

- Draw line *1* as shown. Record point where line crosses index.
- Using point where line *1* crosses index as a pivot, draw line *2*.
- Read off answer as 0.67 volts (rms) per winding turn.

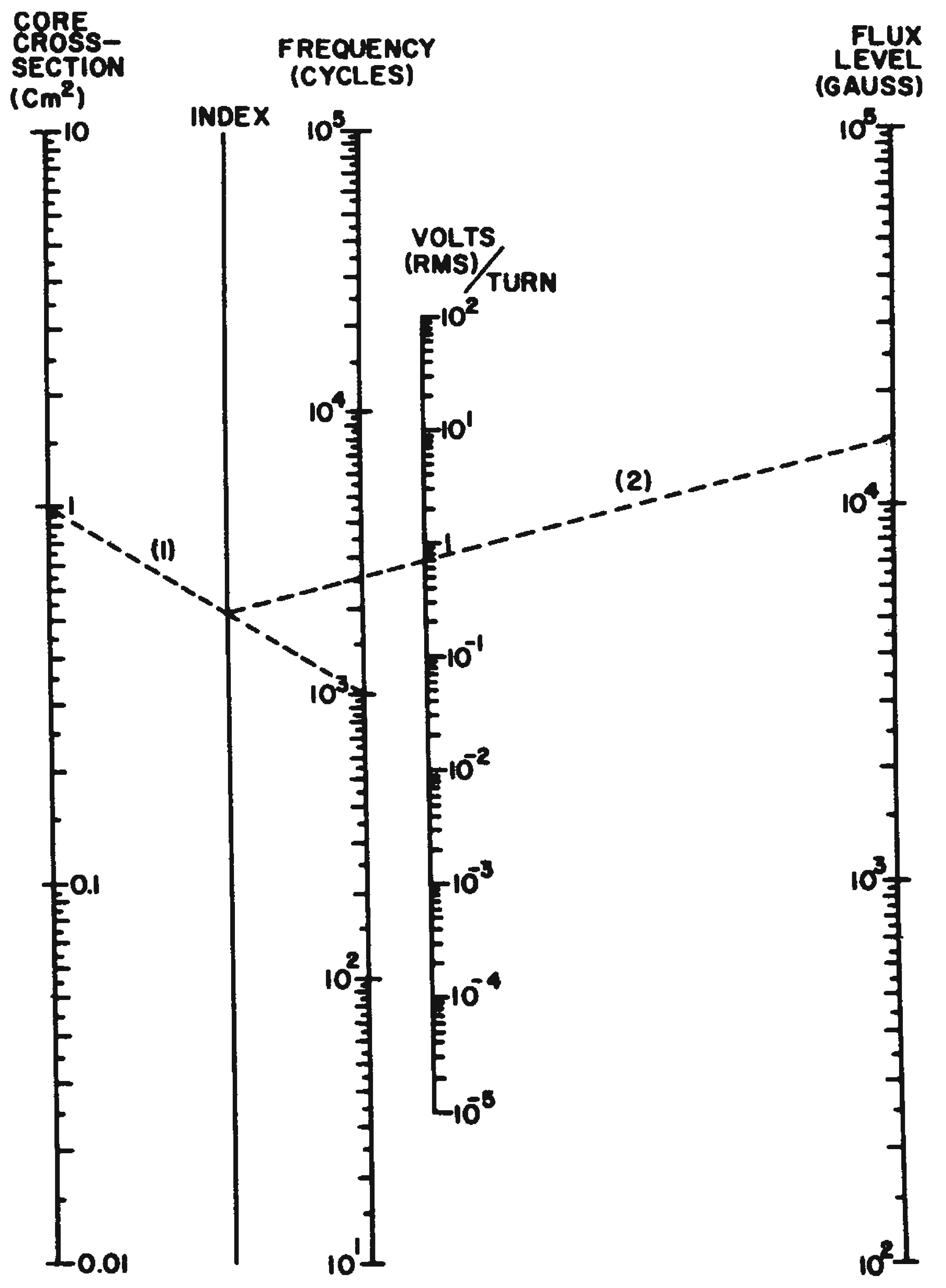

R. Booth, electronic research engineer, Jet Propulsion Lab., Pasadena, Calif.

Filter Designs Combine Bias and Frequency Components

Circuit designers who use only passive networks for amplitude shaping may find valuable this straightforward approach to pass-filter design. The approach is illustrated by the pass-filter building blocks shown in the figures. These circuits:

1. Use the same components to achieve both the proper bias and frequency characteristics. No components are used exclusively as biasing functions; thus, their number is reduced.
2. Limit linear transistor amplifier configurations to the emitter-follower type. Only +1 gain operational amplifiers are used having inherently great gain stability. Their reliability can approach that of passive circuits.

The circuit in Fig. 1 allows capacitive coupling to the preceding stage. Resistor R_1 is chosen in conjunction with R_{K1} for proper impedance matching, base biasing, and dc output level, without regard to preceding stage voltages.

The circuit in Fig. 2 allows direct coupling to the preceding stage. The value of R_2 is chosen for proper impedance matching and base biasing, considering the preceding stage dc level.

Because of the high-input/output impedance ratio of emitter-followers, little consideration need be given stage interdependence. As examples, the filter in Fig. 3 was designed as a pulse-width demodulator. A bandpass filter-circuit arrangement is shown in Fig. 4.

Gerald F. Allen, Electronic Engineer, General Dynamics, Pomona, Calif.

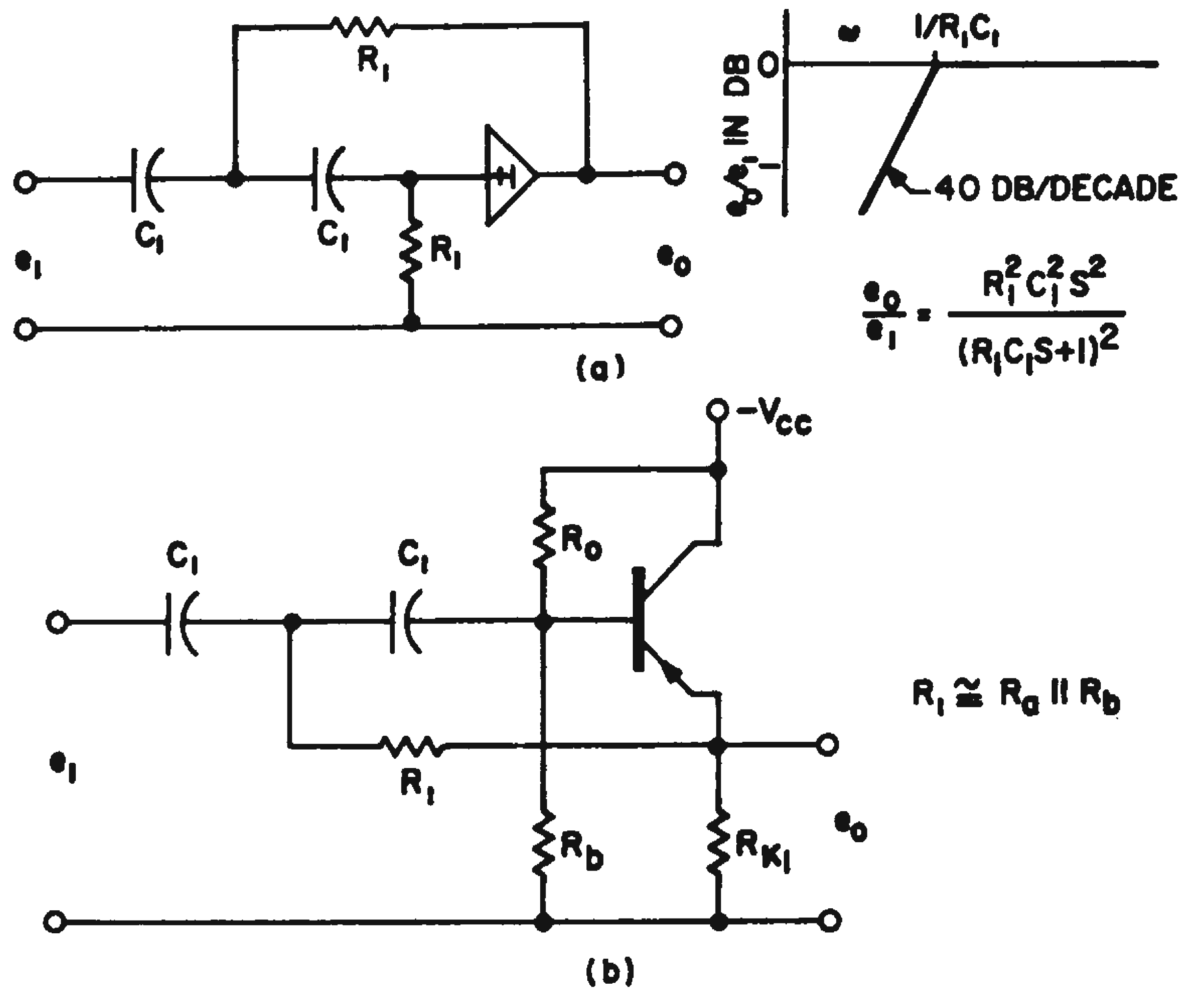

Fig. 1. High-pass filter stage: a. Ideal design, b. Practical approach.

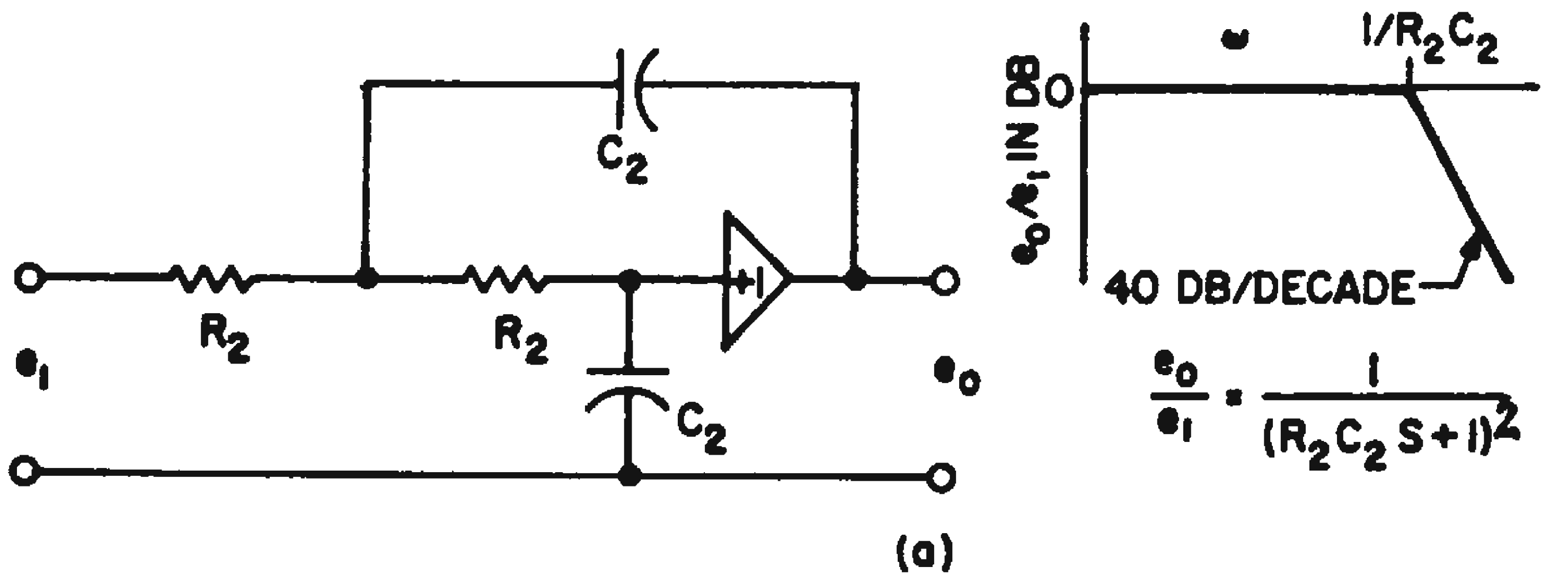

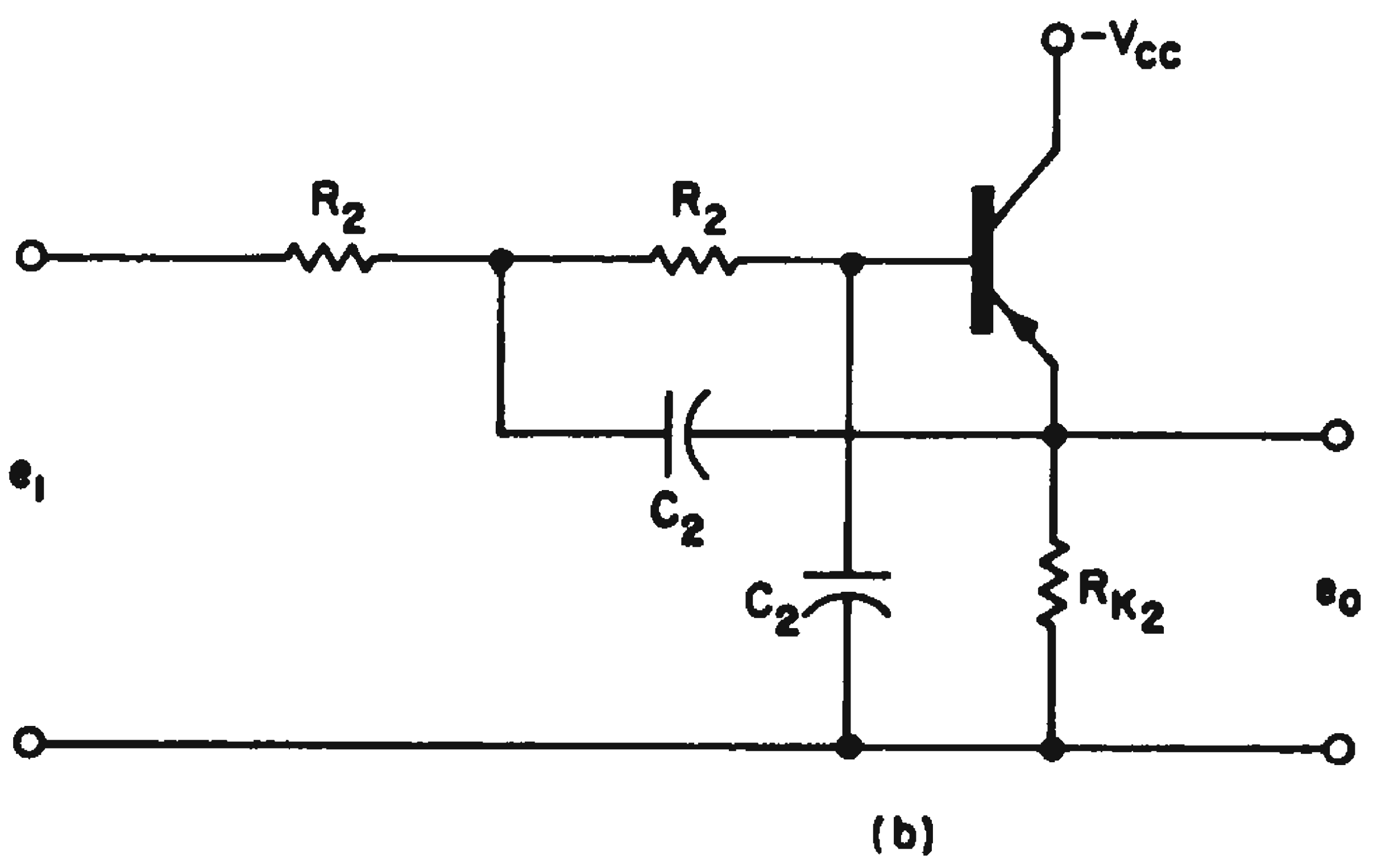

Fig. 2. Low-pass filter stage: a. Ideal design, b. Practical approach.

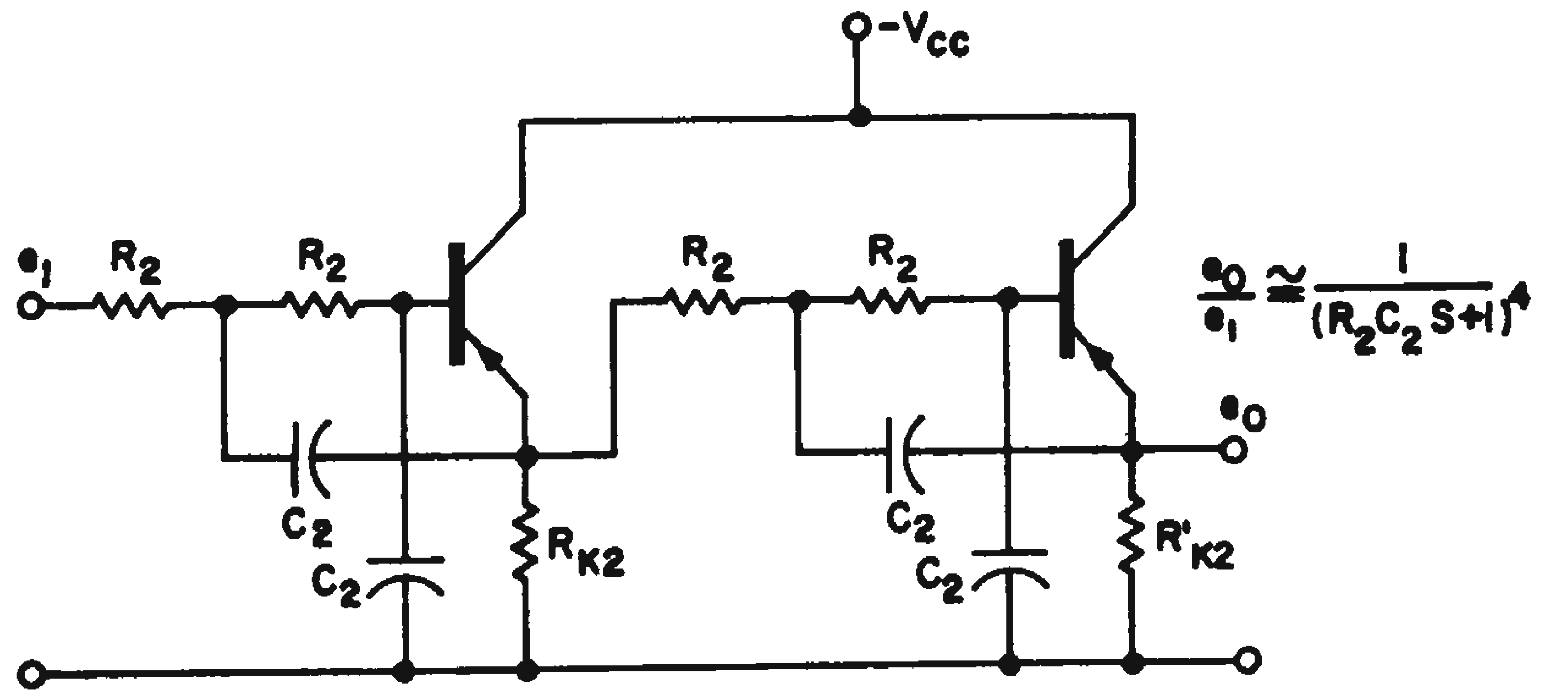

80 DB/DECADE FALL-OFF

Fig. 3. Typical low-pass filter circuit.

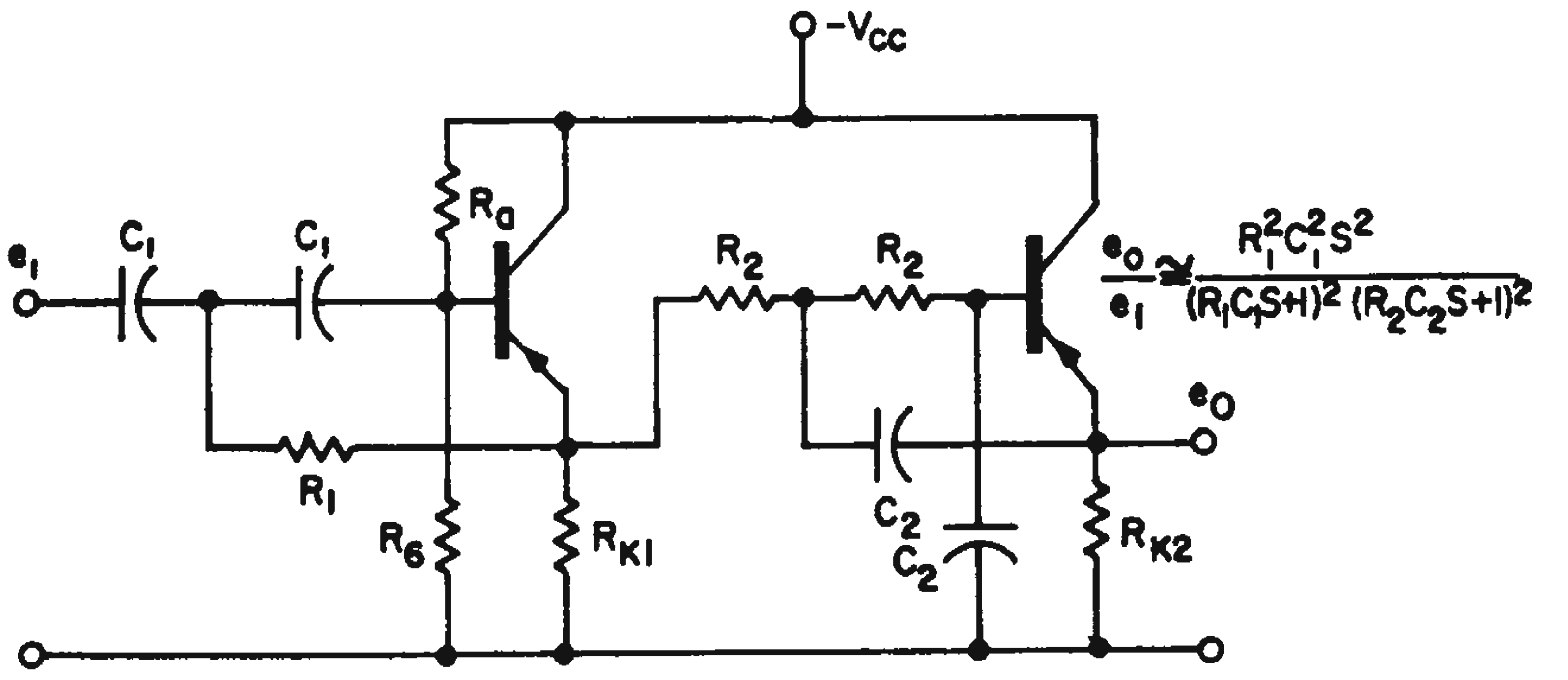

40 DB/DECADE ATTENUATION EITHER SIDE OF PASS-BAND

Fig. 4. Typical band-pass filter circuit.

Narrow-Band Filter Relies On Demodulating Circuit

A novel narrow-band filter was designed which operates by synchronously demodulating the input signal, filtering the resulting dc voltage and then remodulating at the desired frequency. The output signal is a square wave with zero phase shift.

The fundamental frequency is fixed by a square-wave reference signal which helps to demodulate and remodulate the input. This reference does not affect the phase or frequency of the filtered signal.

Operation of the filter can be described by referring to the basic circuit, (a).

With the input and reference signals in phase, and the signal polarity positive, the double-pole relay will be in the position shown. During this first half cycle capacitor C_1 charges positively.

During the second half cycle, when the relay is de-energized, C'_1 charges negatively. The cycle is then repeated until the capacitors are charged to the peak value of the input signal.

The time required to achieve this peak charge depends on the time constants R_1C_1 and $R_1C'_1$. In turn, this determines the bandwidth of the filter.

The output signal is obtained by alternately reading the charge voltage of C_1 and C'_1 through a large resistance, R_2. The output signal is, therefore, a square wave with a frequency and phase that is identical to the input signal.

The complete synchronous filter is shown in (b). Circuit parameters are for a center frequency of 500 cps.

A second section is paralleled to the basic circuit, with the reference signal of this section shifted 90 deg in phase. This eliminates the need for a particular phase relationship to exist between the input signal and the reference. The reference frequency need only be close enough to the input signal frequency so that they are both within the filter bandpass.

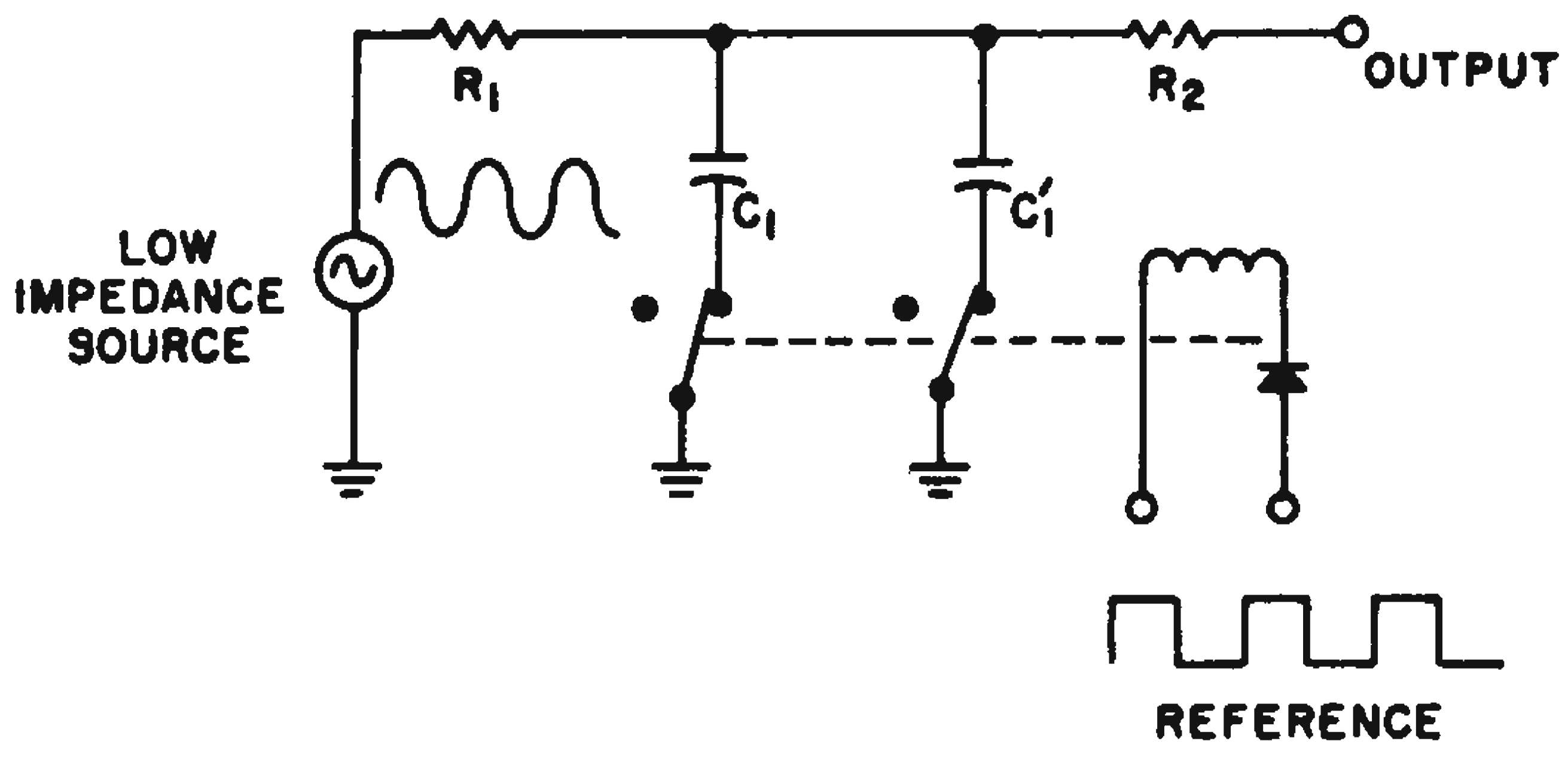

(a)

(a) Basic circuit of narrow-band filter indicates how square-wave reference is used to help demodulate input signal. Output signal is obtained by alternately reading the charge voltages on the capacitors.

The 90-deg phase shift is achieved by dividing a reference signal at twice the desired frequency. The output of the two multivibrators are 90 deg apart since their inputs are 180 deg apart.

Other methods for obtaining the 90-deg phase shift may be used; the choice will depend on the particular filter application.

The double-pole relay of (a) has been replaced by npn and pnp switching transistors.

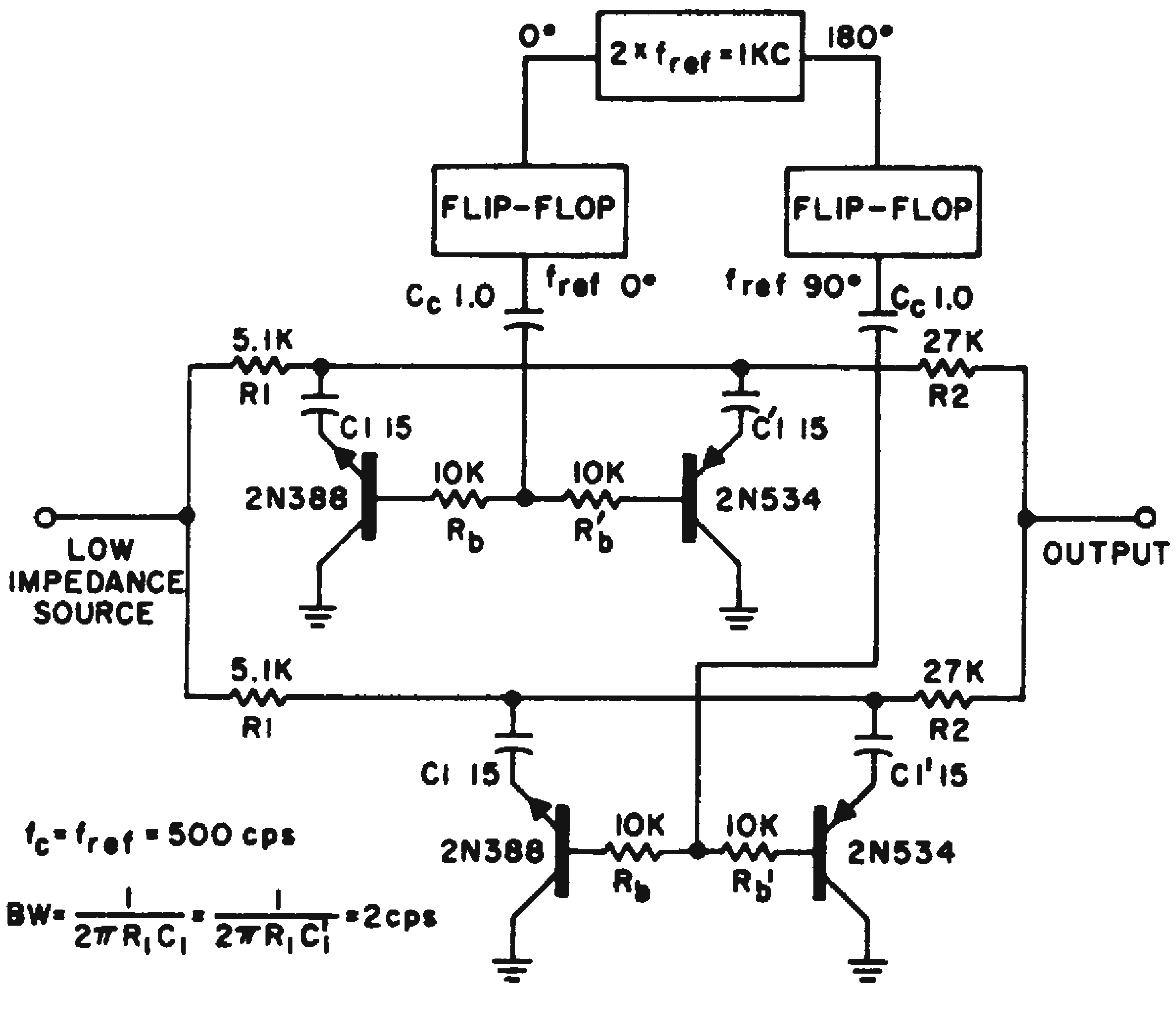

(b)

(b) Complete filter schematic gives parameters for fundamental output frequency of 500 cps.

The transistors are used in the inverted connection to reduce the offset voltage.

In addition to the desired response at 500 cps, the filter has an attenuated response to the odd harmonics of the fundamental and to dc. The third, fifth and seventh harmonics are approximately 10, 14 and 17 db below the center frequency.

Additional rejection to the off frequencies can be obtained with broad-band RC filtering if desired. The magnitude of off frequency rejection is determined by the offset voltage developed by the switching transistors. The transistors used provided 40-db rejection with no selection of units.

Glen W. Ashley, Senior Research Engineer, Convair, Pomona, Calif.

Forward Biased Diode Gives Protection for Crystal Filters

Electrical characteristics of crystal filters may be permanently damaged if large input voltages occur, even for short intervals. In some receivers, for example, the amplifiers before the crystal filter are controlled by a relatively slow-acting agc circuit, and it is possible for very large signals to be momentarily impressed upon the filter input. The simple circuit shown in Fig. 1 effectively prevents large signals from reaching the filter.

Resistors R_2 and R_3 are for dc path and termination purposes, respectively. A path is provided through R_1 for a constant current to bias CR_1 in the forward direction. The maximum peak-to-peak voltage that may exist across the filter input is determined primarily by the dc current through R_1 multiplied by the parallel combination of the crystal input Z and R_2. For normal signal amplitudes CR_1 is always conducting and transfers all of the signal to the filter. When a large input signal exists, C acquires a charge as shown and biases CR_1 in the reverse direction so that it conducts for only a portion of each cycle, limiting the crystal filter input. The polarity acquired by C forces a larger current through R_1, which should be reasonably constant for good protection. The B− voltage may be increased to provide a more constant current or R_1 may be replaced in part by a transistor, as shown in Fig. 2.

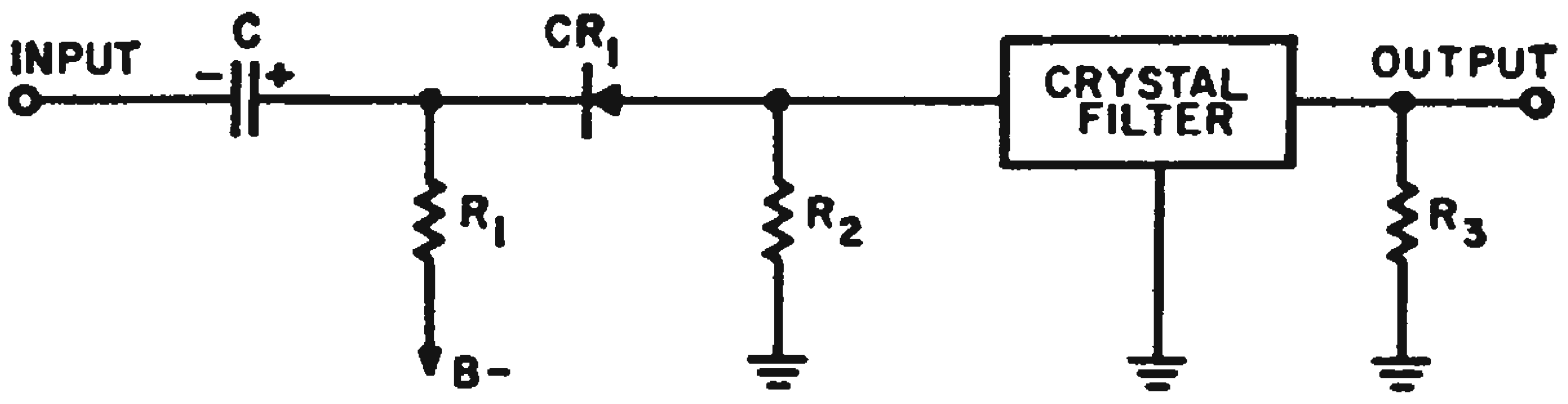

Fig. 1. Crystal-protection circuit shunts voltage peaks through R_1.

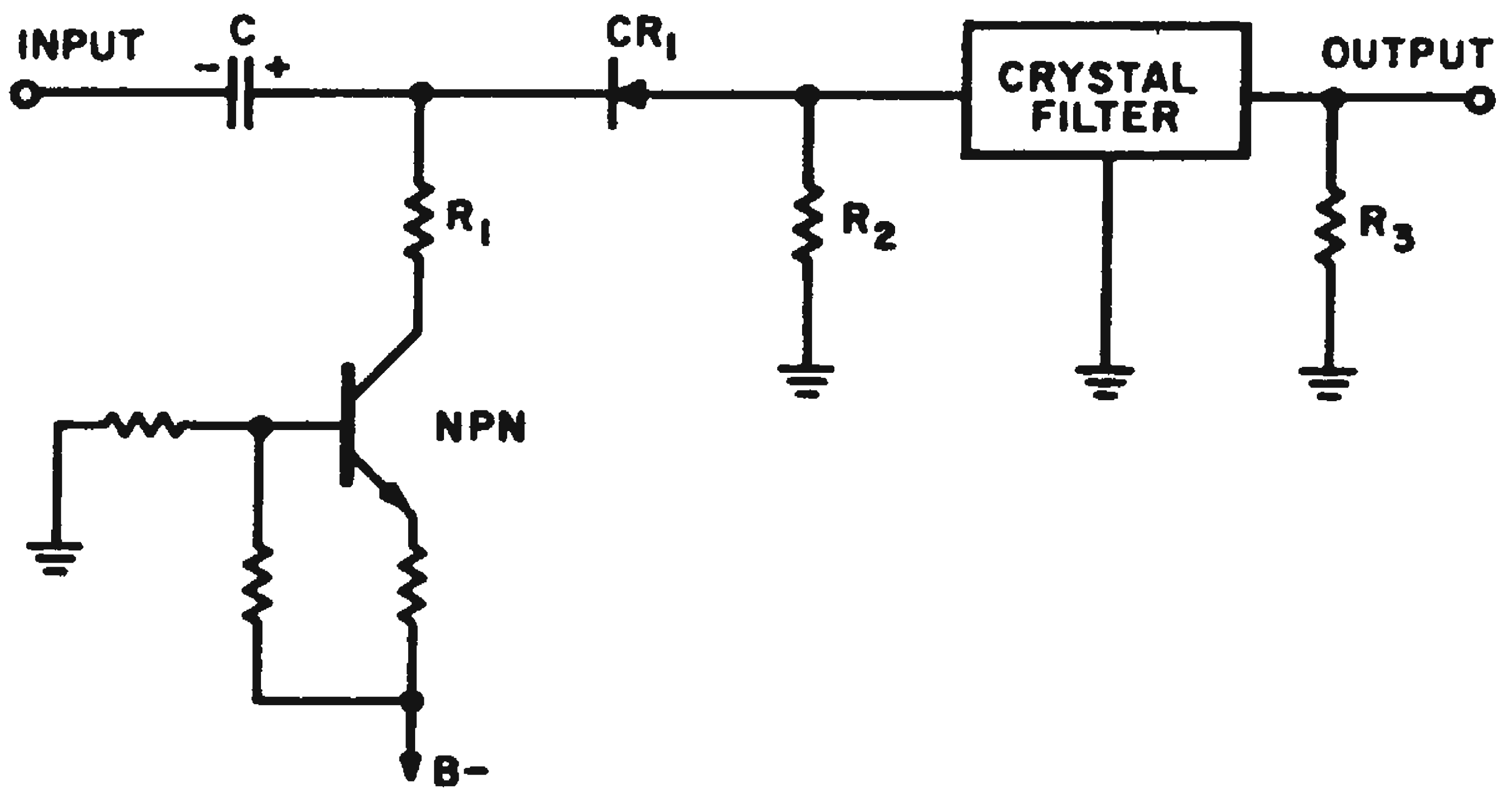

Fig. 2. Use of transistor with R_1 maintains constant current.

These circuits also may be used for amplitude limiting.

M. F. Feller, engineer, General Dynamics Corp., San Diego, Calif.

Low-Pass Filter Converts Square Waves To Sine

A square-to-sine wave converter can be readily designed by passing the square wave into a low-pass filter whose cut-off frequency is the same as the square wave's fundamental.

A constant-k, low-pass filter has zero attenuation from zero to its cut-off frequency. Above this frequency its response falls off at the rate of approximately 12 db per octave. Therefore, if the cut-off frequency and the fundamental of the input square wave are the same, the output waveform will contain almost all of the fundamental. However, it will contain only about 25 per cent of the second harmonic and only about 12 per cent of the third harmonic. Since the relative harmonic contents of a square wave are 0 per cent second and 33 per cent third, the resulting sine wave will have less than 5 per cent distortion.

The transistor amplifier is used to isolate against load variations and to restore the amplitude losses. Thus, several filters may be cascaded to obtain lower distortion without having the losses accumulate. This also allows operation at slightly higher square-wave frequencies—above the filter cut-off frequency.

With 5 per cent tolerance components a square-wave frequency range ratio of 1.35:1 is permissible for output distortion less than 5 per

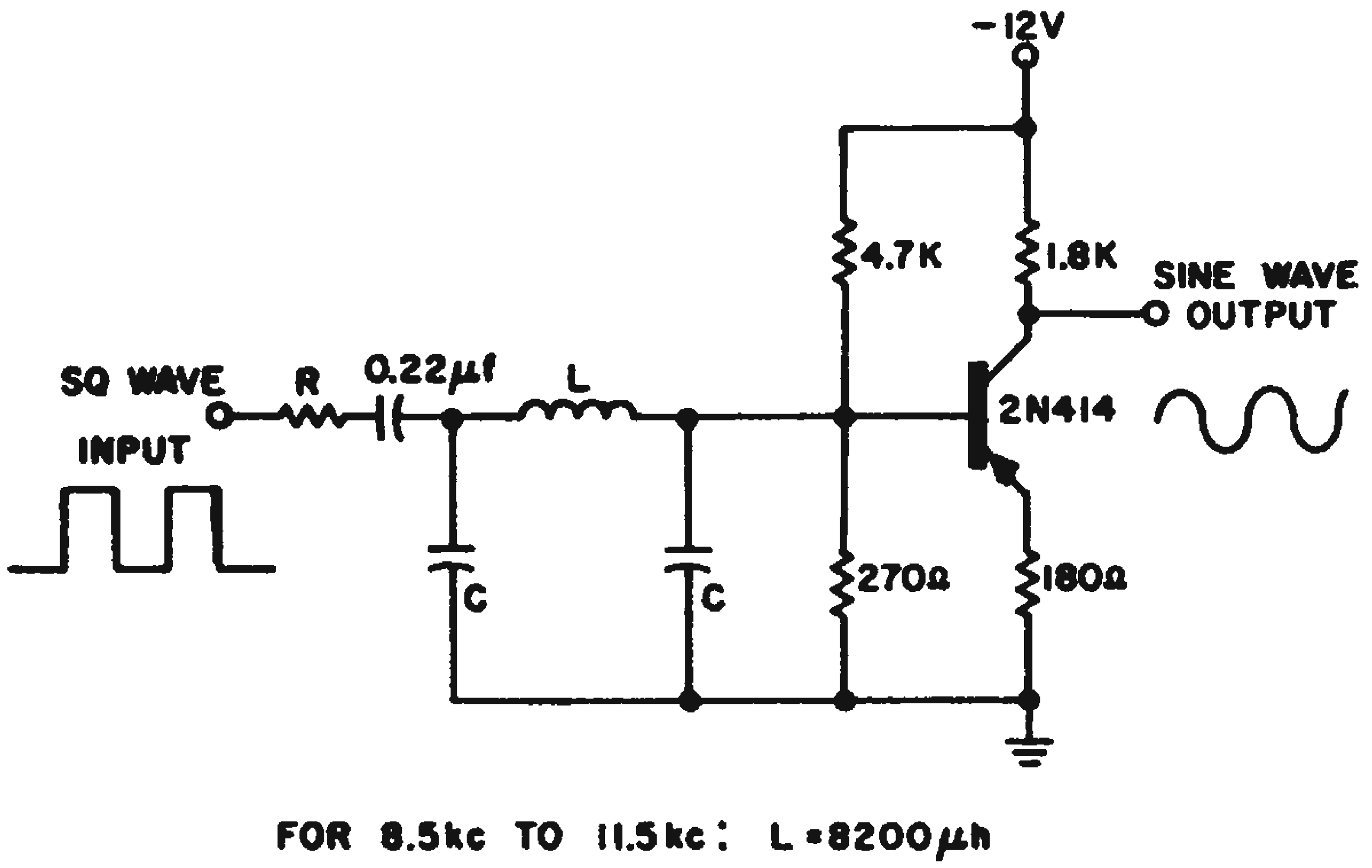

Square wave input is converted to sine wave output after it is passed through the low-pass filter. Transistor stage amplifies signal to desired level.

cent and amplitude stability of ±3 db. Thirteen different circuits were developed to cover a continuous frequency range from 6.4 kc to 265 kc without the need for tuning.

In the circuit shown an output sine-wave amplitude of 6 v peak-to-peak is obtained from an input square-wave amplitude of 8 v peak-to-peak with $R = 3.9$ K. Lower values of R require less input amplitude for 6-v output.

William H. Ferwalt, Senior Engineer, Engineered Electronics Co., Santa Ana, Calif.

Novel Notch Filter Is Easy to Tune for Null

Unlike a bridged-T or parallel-T circuit, the 185-cps notch filter shown in Fig. 1 is simple to tune for a minimum null, and does not require close tolerance components.

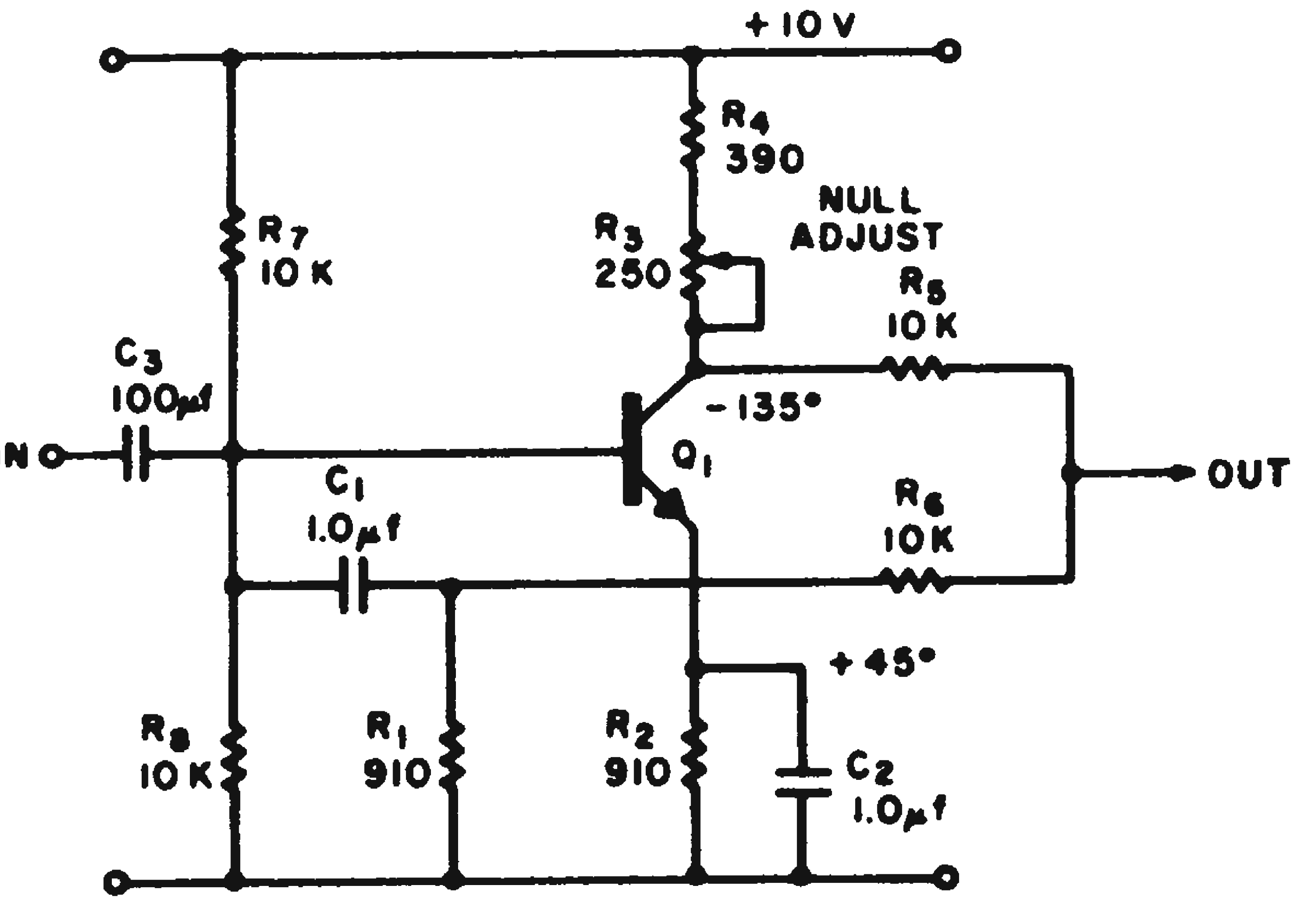

DESIGN EQUATIONS

$R_1 = \frac{1}{\omega C_1}$

$R_2 = \frac{1}{\omega C_2}$

$R_4 \approx \frac{R_2}{2}$

$R_3 \approx \frac{R_2}{4}$

(ω = CUTOFF FREQUENCY)

$R_5 = R_6 \approx R_7 = R_8$

$R_5 \approx 10 R_2$

$C_3 > 10 C_1$

Fig. 1. Circuit gives component values for 185-cps notch filter. Other notch frequencies can be obtained by using design equations.

The X_c of C_1 is equal to R_1 at the rejection frequency, providing a 45-deg voltage lead at point A.

The X_c of C_2 equals R_2 at the rejection frequency, providing a 45-deg current lead at the emitter of Q_1. The voltage at the collector of Q_1 will always be 180 deg out of phase with the current at the emitter, providing the transistor is being operated well within its f_{hfe}. Thus, if the current at the emitter is +45 deg, the voltage at the collector will be −180 +45 deg or −135 deg.

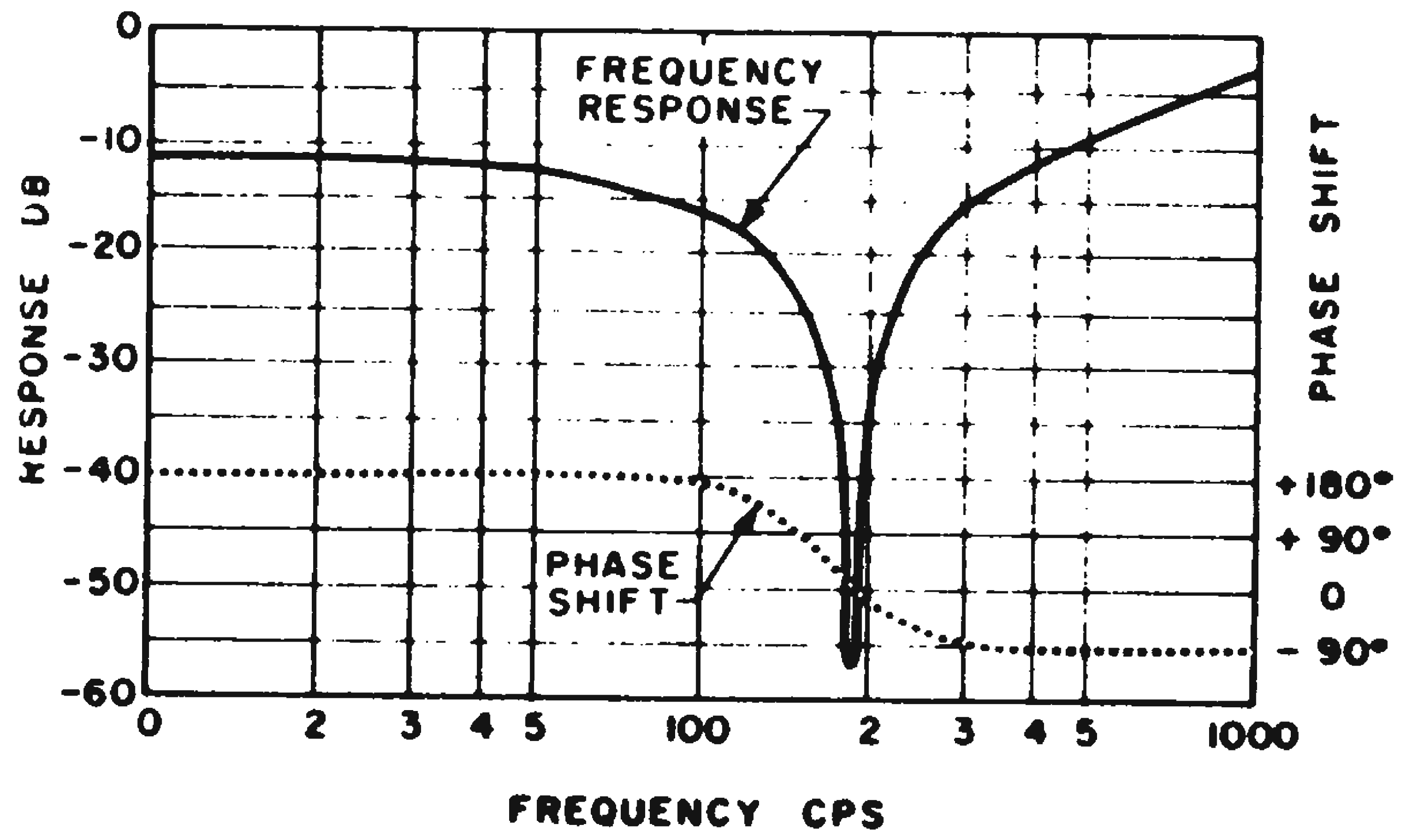

Fig. 2. Response and phase shift for 185-cps notch filter.

This −135-deg signal is summed with the +45-deg signal at point A. Because the two signals are 180 deg out of phase, the resultant output will be zero.

The null control is used to adjust the gain of the transistor stage to assure that its output is of equal magnitude to the voltage at point A.

Because Q_1 is being used at unity gain, the circuits immunity to ambient temperature variations is excellent.

The frequency response curve of the sample circuit is shown in Fig. 2.

Alan J. Adler, circuit design consultant, Alan J. Adler Associates, Plainfield, N. J.

Differential Monitor Detects Error Voltage

A voltage sensing circuit was desired to sense an error voltage of either polarity and give an indication that the voltage had surpassed pre-established limits. In addition, the circuit had to be:

1. Small size
2. Reliable
3. Fail-safe
4. Temperature stabilized
5. Low drift sensitive
6. Fairly high in its input impedance.

Circuits of this type are used in monitoring circuit faults, or as part of automatic checkout equipment. Many types of circuits were investigated, but the differential type consistently satisfied the above criteria.

The basic differential monitor consists of a differential stage followed by a two-stage relay driver. The diagram illustrates a circuit intended to monitor negative input voltages. Transistors *Q*1 and *Q*2 are npn types while *Q*3 and *Q*4 are pnp types. A negative reference is provided by *CR*3.

A revised version of this circuit can be used to monitor positive input voltages. In this circuit, *Q*1 and *Q*2 are pnp types, and *Q*3 and *Q*4 are npn types. In addition, all power supplies and diodes are reversed, resulting in a positive reference at *CR*3. Otherwise, the differences between the two circuits are insignificant.

The circuit as shown is designed to monitor a minimum voltage of —5 v to a tolerance of ±5 per cent with an accuracy of 25 mv. The input impedance of the monitor is approximately 50 K. For this reason, it should not be used to monitor a circuit with less than a 5 K impedance.

If the nominal voltage to be monitored is larger than 5 v, then it is necessary to use a voltage divider, as the circuits are designed to work with a nominal input of 5 v dc. Inputs with higher or

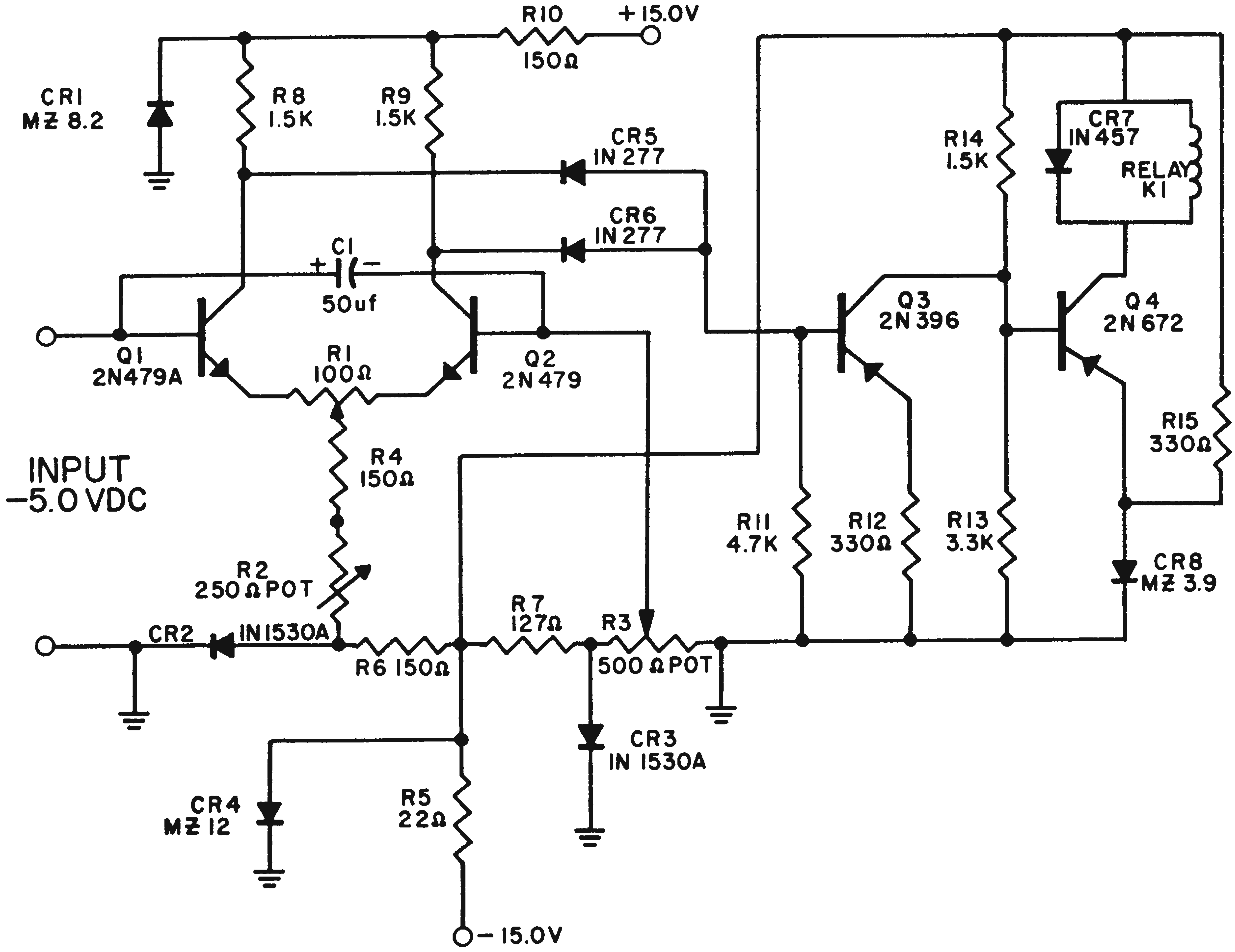

High-impedance transistorized differential circuit trips relay when monitored voltage exceeds preset limits.

lower output impedance than that recommended may be monitored at the discretion of the user. However, it must be remembered that due to the bootstrapping from *Q*1 to *Q*2, approximately 3.9 v are present at base of *Q*1 when there is no input.

The input impedance varies as follows:

Circuit	Input Voltage	Input Impedance
negative	—4.75 v	50 K
monitor (shown)	—5.00 v	170 K
	—5.25 v	175 K
positive	+4.75 v	82 K
monitor	+5.00 v	139 K
	+5.25 v	350 K

Null Stability is held to a level no greater than 25 mv between 10 deg C and 40 deg C with power supply variations of ±5 per cent. Component interchangeability is achieved by means of double regulation of the critical reference voltage and the choice of temperature stable complementary diodes throughout. Changes due to h_{FE} and I_{CO} are substantially nullified by the common mode rejection of *Q*1 and *Q*2 as well as by the complementary symmetry arrangement of the circuitry.

Operating points of the circuit are set by the three potentiometers, R_1, R_2 and R_3. To set these adjustments, all three are set to mid-range and an input voltage of —4 v dc or less is applied. R_3 is adjusted for —5.25 v dc at its wiper. When the input voltage is raised to —5 v dc, relay K_1 will pick up. The lower drop-out voltage is then set to —4.75 v dc by means of R_1 and the upper drop-out voltage to —5.25 v dc by means of R_2.

Joseph T. Moses, Specialist, General Electric Co., Syracuse, N. Y.

Detected AM Chopped for Per-Cent Modulation Measurement

An inexpensive oscilloscope, one without a dc amplifier or wide bandwidth, can be used when measuring the per-cent modulation of a transmitter output.

Ordinarily, the circuit shown in Fig. 1 would be used in making the modulation measurement. An envelope detector removes the high-frequency signal, leaving only the modulating wave. However, the oscilloscope must have a dc amplifier so that the average carrier level is known when the display is observed. The expression for the per-cent modulation is given in the figure.

The arrangement of Fig. 2a, which chops the detected signal before it is passed on to the scope, allows the zero reference to appear but does not require a dc amplifier. Also, it isn't necessary to sync the chopper and modulating signal, since all that is desired are readings of the peak, trough, and zero reference points. The resultant display is shown in Fig. 2b.

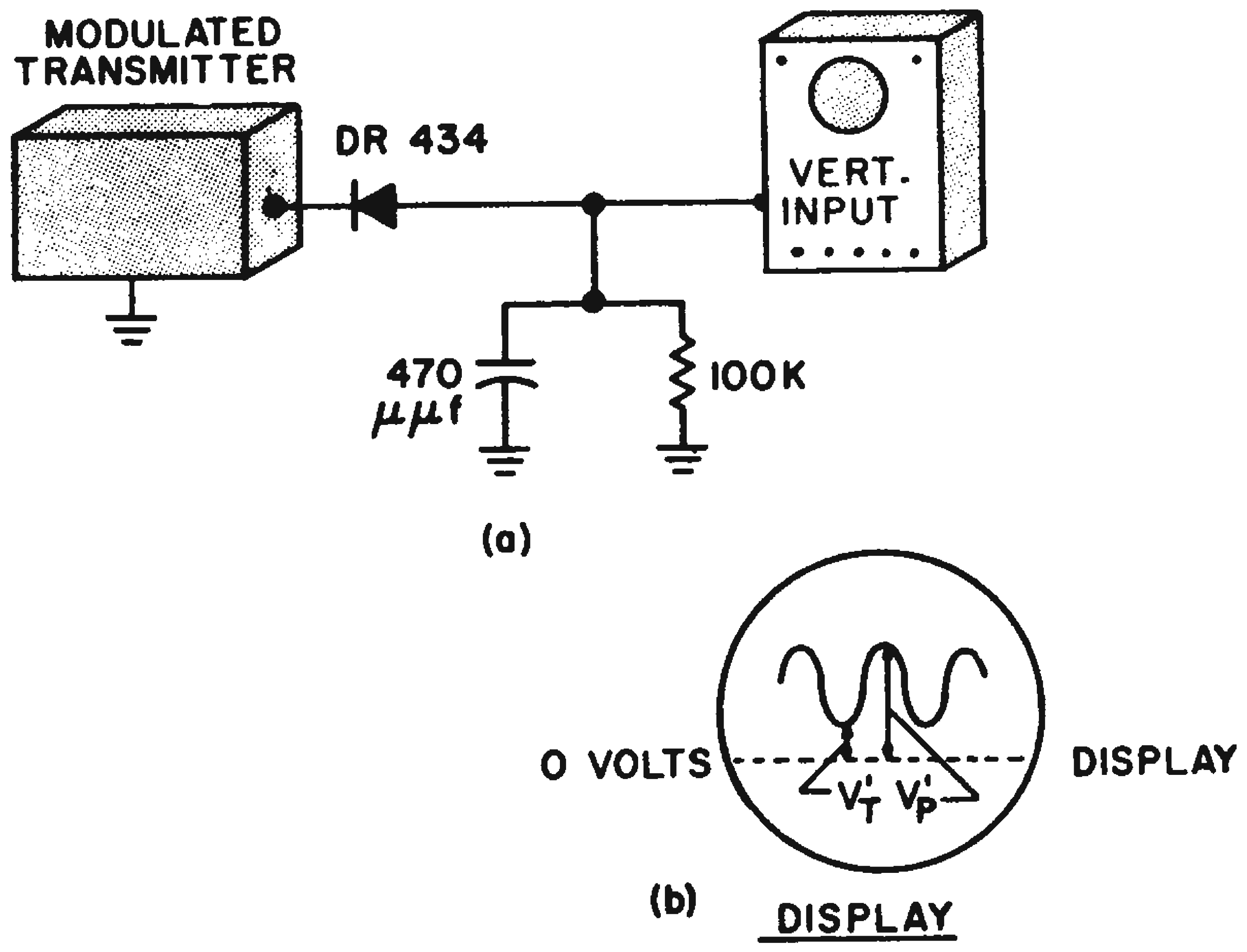

Fig. 1. **(a)** Conventional arrangement for measuring per-cent modulation requires oscilloscopes with a dc amplifier. (b) The per-cent modulation is found from the scope display.

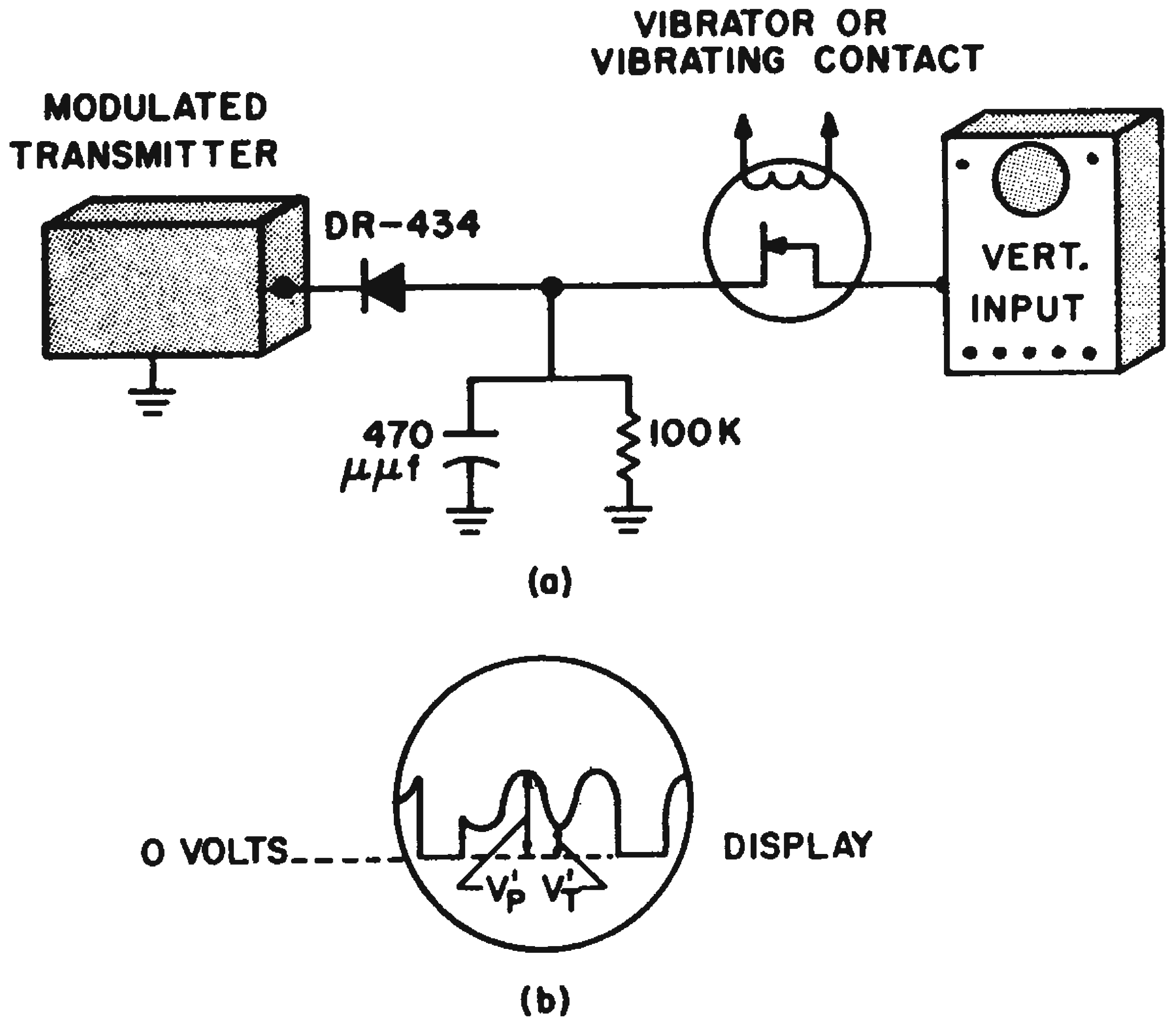

Fig. 2. **(a)** A dc amplifier is no longer required when the detected signal is first chopped and then applied to the scope's vertical input terminals. (b) The scope display still provides the peak, trough and zero reference points.

Measurements made on a Dumont 208 scope with the chopping arrangement, were found to be within 5 per cent when checked with both a

Tektronix 545 scope and the calibrated meter on a Boonton Signal Generator. However, the method was more inaccurate when the rf voltage was very low, or the modulation trough was very deep.

Matthew C. Baum, Solid-State Circuits Generalist, New York, N.Y.

Visual Display Helps Determine Tuning Fork Q

Obtaining the Q of a tuning fork can be an easy process if the fork's transient, rather than its steady state response, is considered. This is done with the circuit of Fig. 1, which determines Q with the aid of a visual display of the fork's transient decay pattern. It replaces the cumbersome, conventional method which measures the tuning fork's response at its resonant and half-power frequencies. Since the Q's varied from about 600 to 3500, this method requires both critical adjustments and a good deal of time.

For a decaying oscillatory system

$$Q = \pi N_e \qquad (1)$$

where Q = figure of merit and N_e = number of cycles in which the amplitude decreases by a factor of $1/e$,

Since

$$N_e = ft_e \qquad (2)$$

where f = frequency of oscillation and t_e = time required for N_e cycles to occur at the frequency f,

then

$$Q = \pi ft_e \qquad (3)$$

The oscillation decay time, t_e, can be set equal to the time constant of an RC circuit, or

$$t_e = T = RC, \qquad (4)$$

Equating, Eqs. 3 and 4 yields

$$Q = \pi fRC \qquad (5)$$

In order to have a convenient, decade reading of Q, the numerical equality

$$Q = C_\mu \times 10^3 = C \times 10^9 \qquad (6)$$

should hold true, where $C\mu$ = capacitance in microfarads.

It follows from Eqs. 5 and 6 that

$$\frac{Q}{C_\mu(10^3)} = 1 = \pi fR(10^{-9}), \qquad (7)$$

and therefore

$$R = \frac{10^9}{\pi f}. \qquad (8)$$

For f = 400 cps,

$$R = \frac{10^9}{\pi\,(4 \times 10^2)} = 7.957 \times 10^5 \text{ ohms}$$

and is accurate to 0.5 per cent for 397.5 cps $> f >$ 402.5 cps, which was the range of interest. Obviously, for other applications, the resistance could be adjusted for various frequencies.

With S_1A and S_1B closed (the normal position), Fig. 1, e_1 is applied to TF, whose amplified output, e_2, is imposed on channel A of the oscilloscope and the primary of T_1. Voltage e_3, the rectified output of T_1 is applied across the $[R_t\ R_{in}/(R_t + R_{in}]C$ network, and displayed on channel B of the oscilloscope. After adjusting e_1

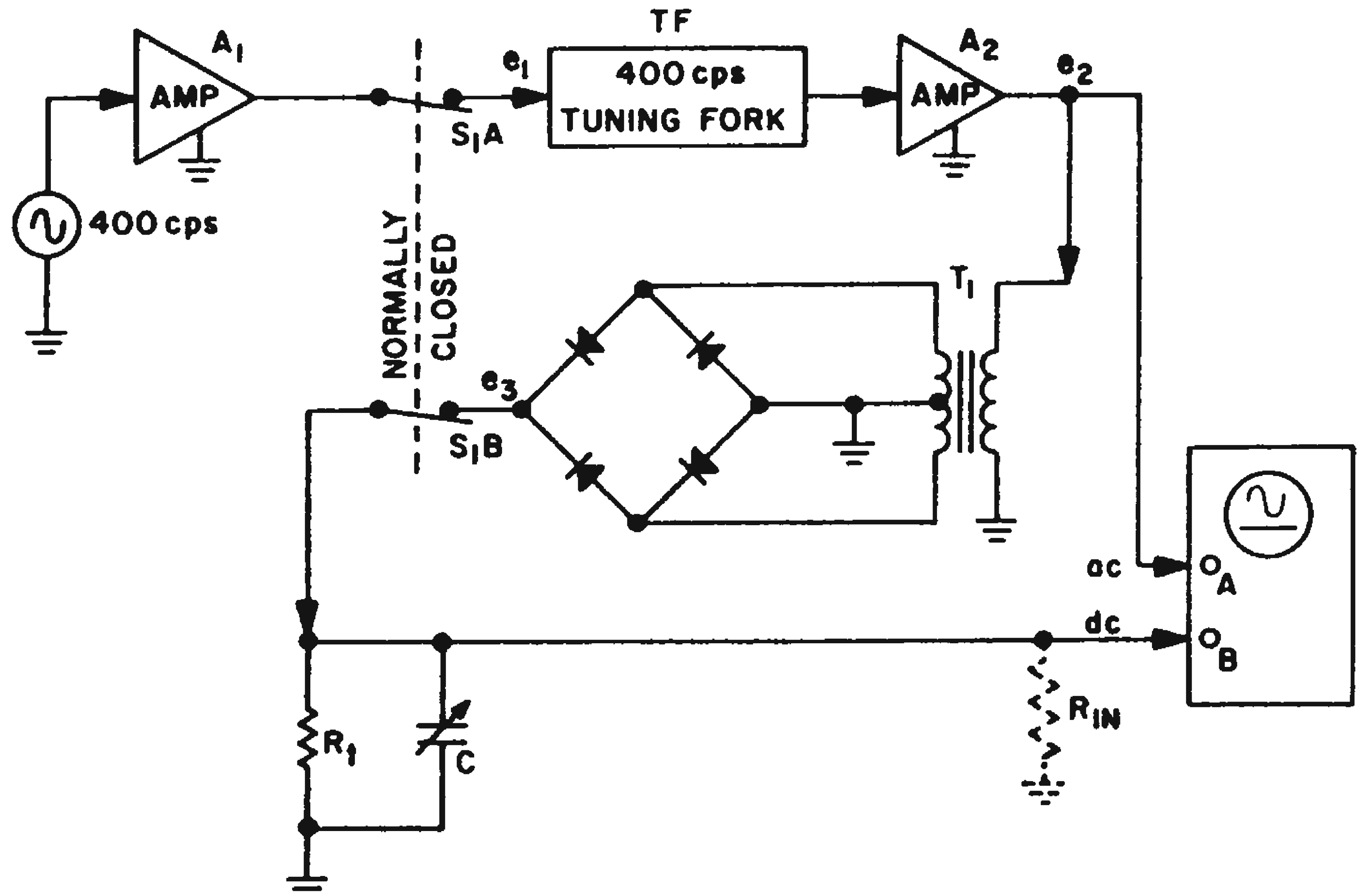

Fig. 1. Q-measuring circuit displays tuning fork's decay transient. The actual time constant is determined from the value of the capacitance C.

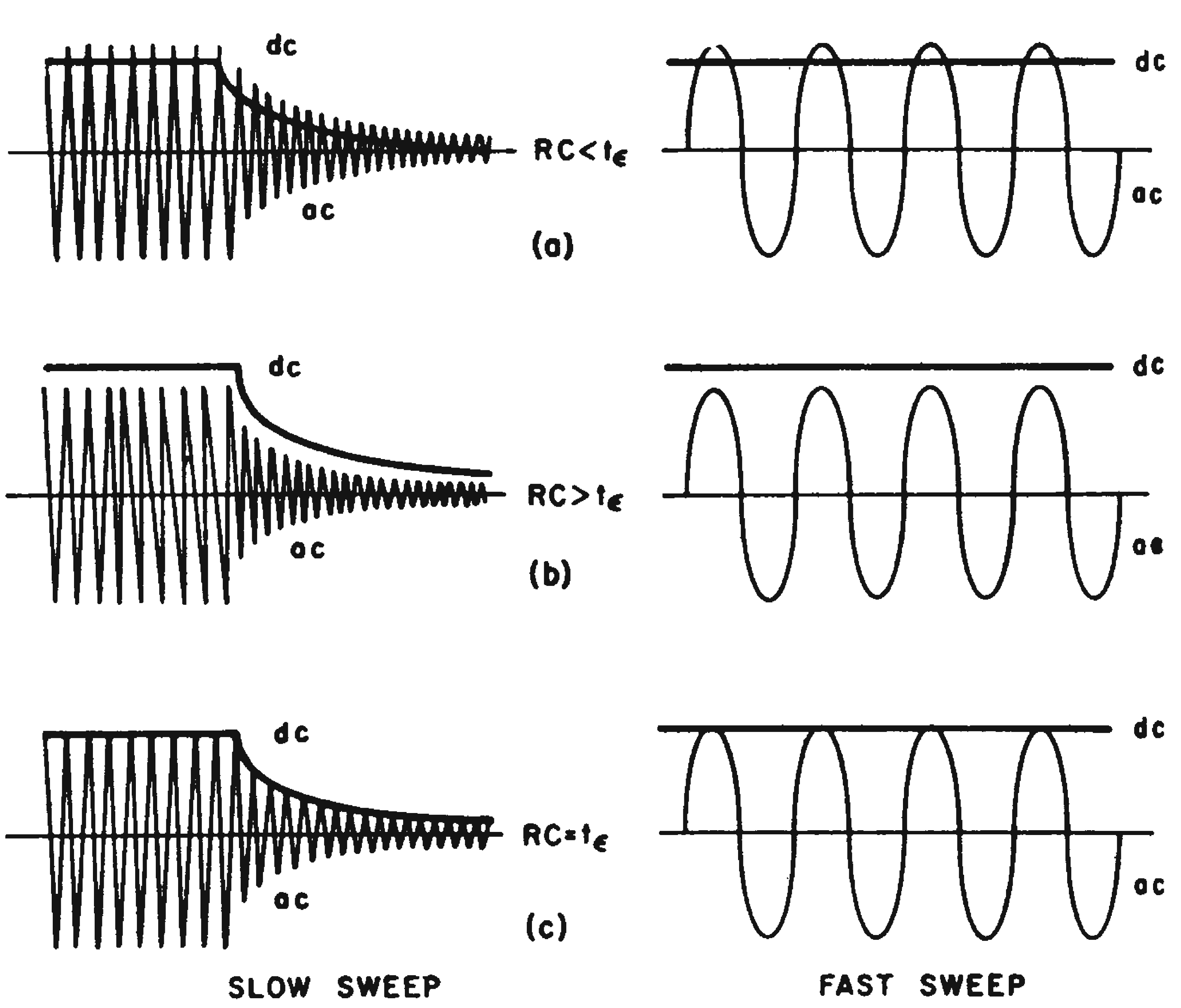

Fig. 2. Oscilloscope patterns for different values of capacitor C. In practice R is held constant and C is varied, until rectified and alternating waves are lined up as in pattern (c).

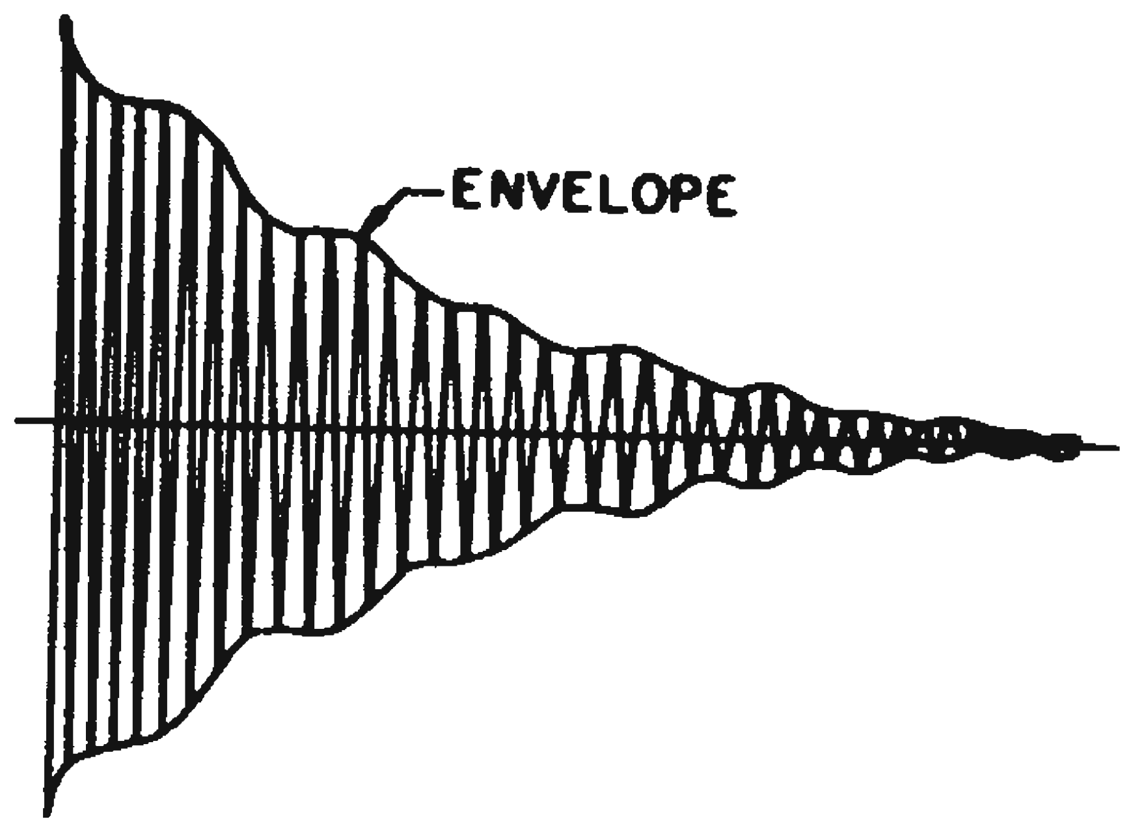

Fig. 3. This oscilloscope (slow sweep) pattern results when tuning fork is unbalanced (tines are at two different frequencies).

to the rated valve of *TF*, the zero traces of channels *A* and *B* are superimposed. With e_1 applied, the maximum traces of e_2 and e_3 are adjusted, with the channel amplifier sensitivity controls, for congruency.

Pushing down S_1 (*A* and *B*), which is a dpst, normally-closed, spring-loaded, push-button switch, will produce any one of the three oscilloscope patterns, shown in Fig. 2. The pattern displayed depends on the setting of capacitor *C*.

Pattern (a) results when $RC < t_e$, or when the capacitance of *C* is too small. Pattern (b) results when $RC > t_e$, and pattern (c) is produced when $RC = t_e$. The fast sweep patterns are, of course, of exponentially decreasing amplitude. The patterns are a comparison of the decay time of the resonant system versus that of the *RC*-network. When pattern 2c is obtained, the *Q* of the tuning fork is equal to the decade capacitor setting (to 3 significant digits) times 1,000. It was found, in actual operation, that the fast sweep patterns of Fig. 2 give greater resolution (the zero can be suppressed) and consequently reduced operator fatigue and reading error.

Another advantage of this system is that it displays any fork unbalance (that is, two adjacent resonant peaks in its transfer function) as a sinusoid envelope of the ac decay pattern. Such a case is shown in Fig. 3.

The resistor R_t, which is actually a frequency scale-factor adjustment, must be computed together with the input impedance of the oscilloscope. That is

$$R = 7.957 \times 10^5 \text{ ohms} = \frac{R_t R_{in}}{R_t + R_{in}} \qquad (9)$$

R_t can be a variable resistor, calibrated in operating frequency, should this system be applied as a *Q*-meter for a large frequency range.

This method of *Q* measurement is difficult to apply for $Q < 200$. The decay time, t_e, is too fast for an accurate reading. However, this doesn't present any difficulties, since resonant systems with $Q < 200$ can be easily measured by the orthodox methods.

Walter Plywaski, Engineer, The Martin Co., Denver, Colo.

Sensitive Pulsing Circuit Measures 10^{-15} Amp

Extremely small direct currents can be easily measured by a circuit, shown in the figure, which senses pulses whose heights are proportional to the current. The pulse height analyzer can be calibrated to read out currents approaching 10^{-15} amp.

Current *I* entering R_1C_1 is integrated until the equilibrium voltage $E = IR_1$ is reached. Periodically, a switch *Sw* shorts out C_1, discharging it to zero and transmitting a pulse of amplitude *E* through C_2 to pulse amplifier *A*. The amplifier input time constant R_3C_3 divides down the sharp rise *E* at its input to $EC_2/(C_3{+}C_2)$. Measurement is only made of the rise voltage, requiring a high-speed, constant-gain, pulse amplifier. A fast scope and camera have been able to measure currents as low as the 10^{-15} amp mentioned previously.

In selecting components, if R_1 is typically a Victoreen High-Meg resistor of thousands or even millions of megohms, the open switch resistance should be 100 times greater. Such a switch requirement is easily met by using a reed switch, manufactured by such companies as Revere and Clare. The switching is accomplished by an electrostatically shielded coil wound on a Teflon bobbin surrounding the glass. Capacitors C_1 and C_2, of approximately 10 pf can be either air or Teflon insulated.

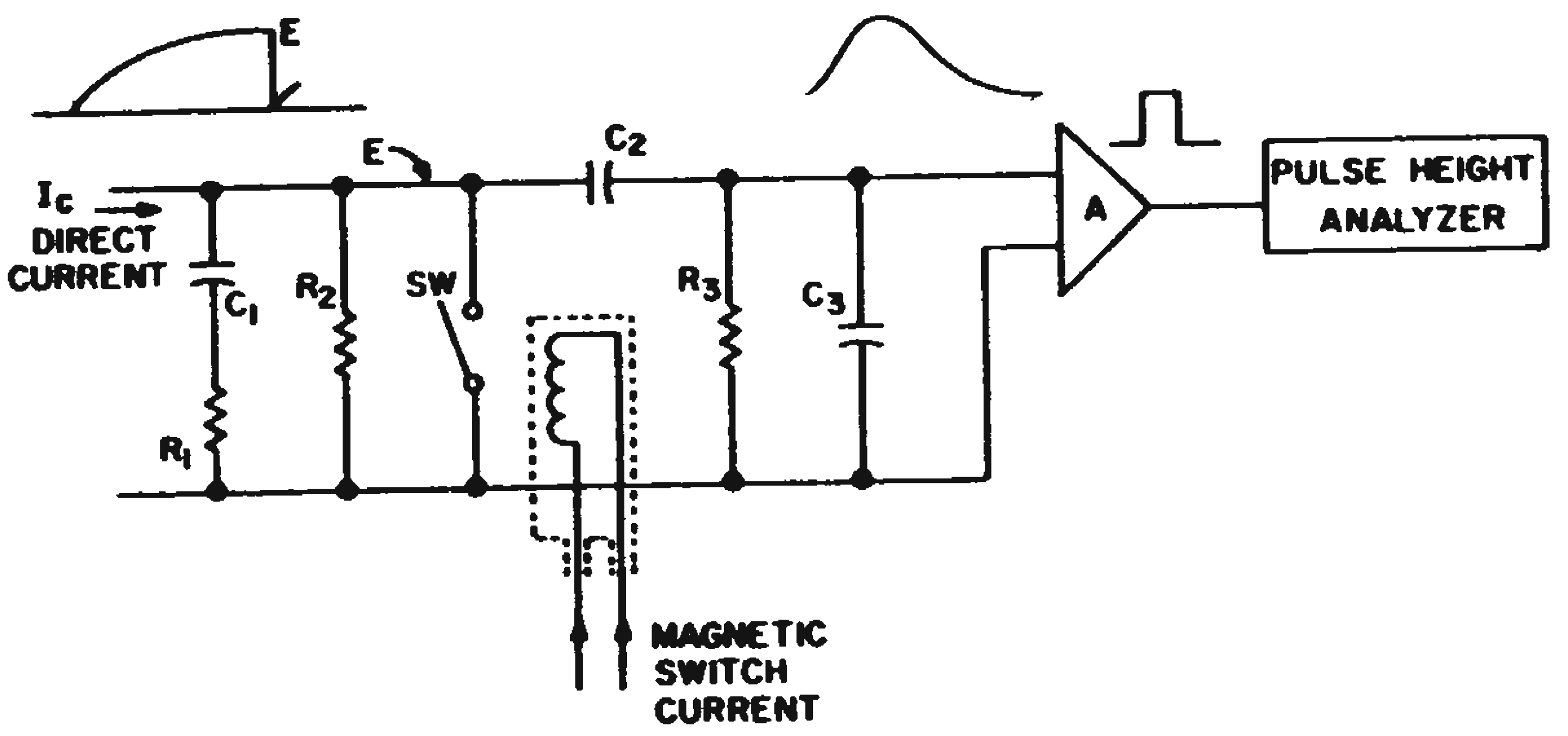

Extremely small (10^{-15} amp) direct currents are measured by sensing a pulse of proportional height.

If *I* represents the desired minimum detectable current, amplifier sensitivity must reach $IR_1C_2/(C_3{+}C_2)$. Hence, if C_1 is 100 times greater than the switch capacity of about 0.1 pf, and is 10 times greater than C_2 and C_3,R_1 is determined. Actually deeper considerations of noise and bandwidth govern the parameters. However, the approximations given here are sufficient. It will be observed that several current inputs can be commutated sequentially, merely by switching the respective R_1C_1.

Patrick F. Howden, Systems Engineer, Consolidated Systems Corp., Monrovia, Calif.

Inexpensive Megohmmeter Measures 50 to 500,000 Megohms

An inexpensive megohmmeter was developed that gives reasonably accurate (±5 per cent) measurements over the range of 50 meg to 500,000 meg. This instrument was developed specifically to test two-conductor shielded cable. It tests each conductor for line-to-line and line-to-shield resistance. The test potential is 500 v and metering is accomplished with a laboratory-type micromicro-ammeter. A one-ma-scale meter is used as a shorts indicator.

The megohmmeter is designed in such a manner that the operator is required to use both hands to accomplish any measurement. This lessens the risk of the operator measuring himself.

A basic circuit designed for the measurement of resistance is shown in Fig. 1. In this circuit, currents developed across R_{sh} represent spurious currents generated within the test set and greatly reduce the high-ohm accuracy of any ohmmeter. This spurious current effectively reduces the value obtained for R_x (as expressed in the formula $R = E/I$).

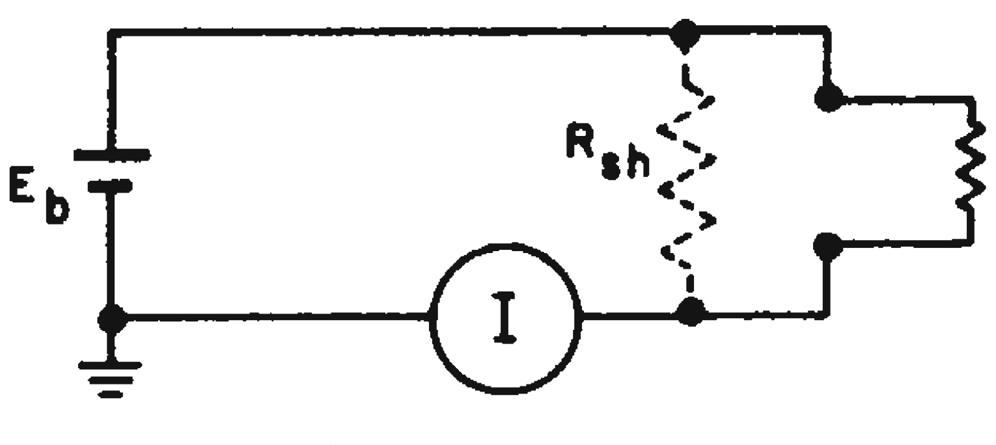

Fig. 1. Basic circuit for the measurement of resistance has leakage resistance in parallel with the unknown.

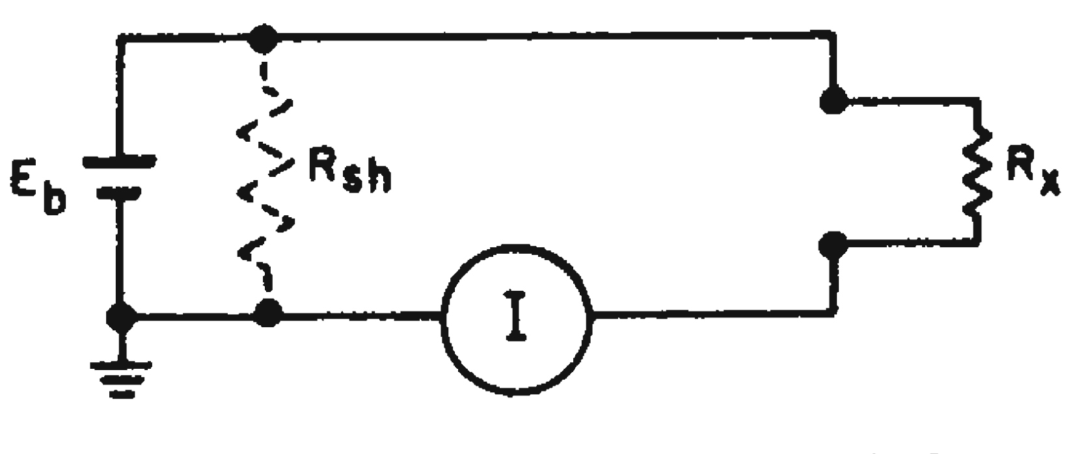

Fig. 2. In the basic circuit developed for the megohmmeter the paralleled resistance is shunted past the meter by a shield to ground.

This is not true for the circuit developed in the megohmmeter. In the basic circuit, Fig. 2, currents created across R_{sh} (representing the internal impedances of the meter circuit) are shunted past the meter by "guarding" with a shield to ground. Therefore, very high effective input resistance can be developed.

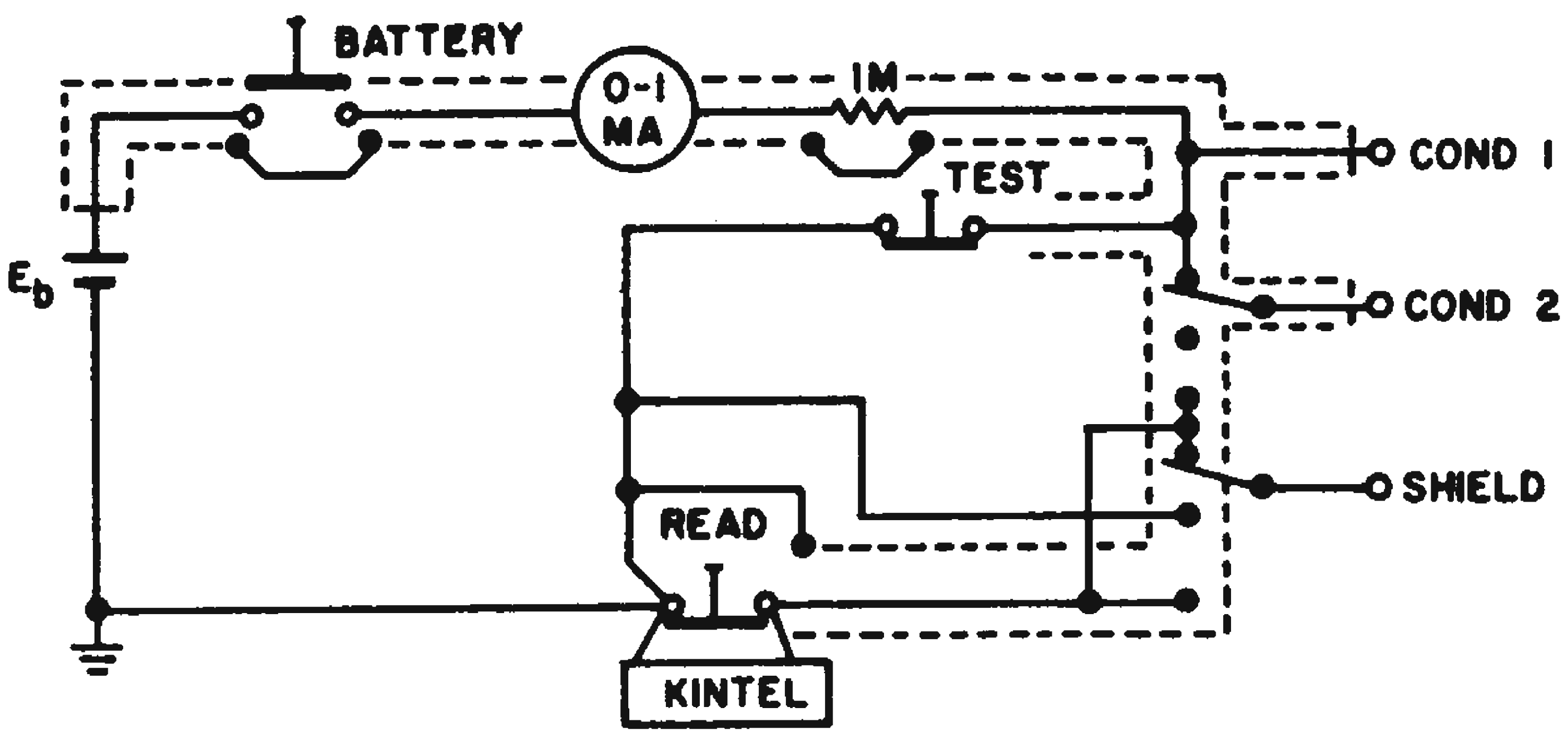

Fig. 3. Megohmmeter can make line-to-line and line-to-shield cable resistance measurements. When calibrated, unit has stable output resistance greater than 0.5 x 10^{15} ohms.

The actual circuit, as developed, is shown in Fig. 3. A three-deck, four-position selector switch is used to switch between line-to-line and line-to-shield. The extra positions and decks allow "guarding" techniques to be applied to the switch wiring. The one-meg resistor is a current-limiting device that will reduce injury should a person get across the 500-v supply.

When calibrated, the meter shows a stable output resistance of greater than 0.5 x 10^{15} ohms. The use of a calibration formula will allow measurement of resistance of that magnitude. Without the calibration formula, the megohmmeter will measure greater than 5 x 10^{12} ohms to approximately 5 per cent.

Walter B. Morton, Jr., Project Manager, Epsco-West, A Division of Epsco Inc., Anaheim, Calif.

Primary Screen Grid Emission Measuring Technique

The circuit shown was used to measure the reverse screen grid current of a tube and determine the extent of its primary screen grid emission.

A 60-cps voltage E_{g2}, is applied to the screen grid through 1N93 diodes *A* and *B*. Screen current, I_{c2}, flows during the positive half of the cycle causing the grid to heat. Diode *C*, causes the E_{c2} meter, to read on the positive half of the cycle.

Source voltage E_{g2}, is adjusted for the maximum screen dissipation specified for the tube. The equation used, $P_{c2} = 2.48\ E_c2I_{c2}$ is based on positive rectified halves of a sine wave. Dissipation is applied for five minutes before readings are taken.

The screen current should conduct for 180 deg

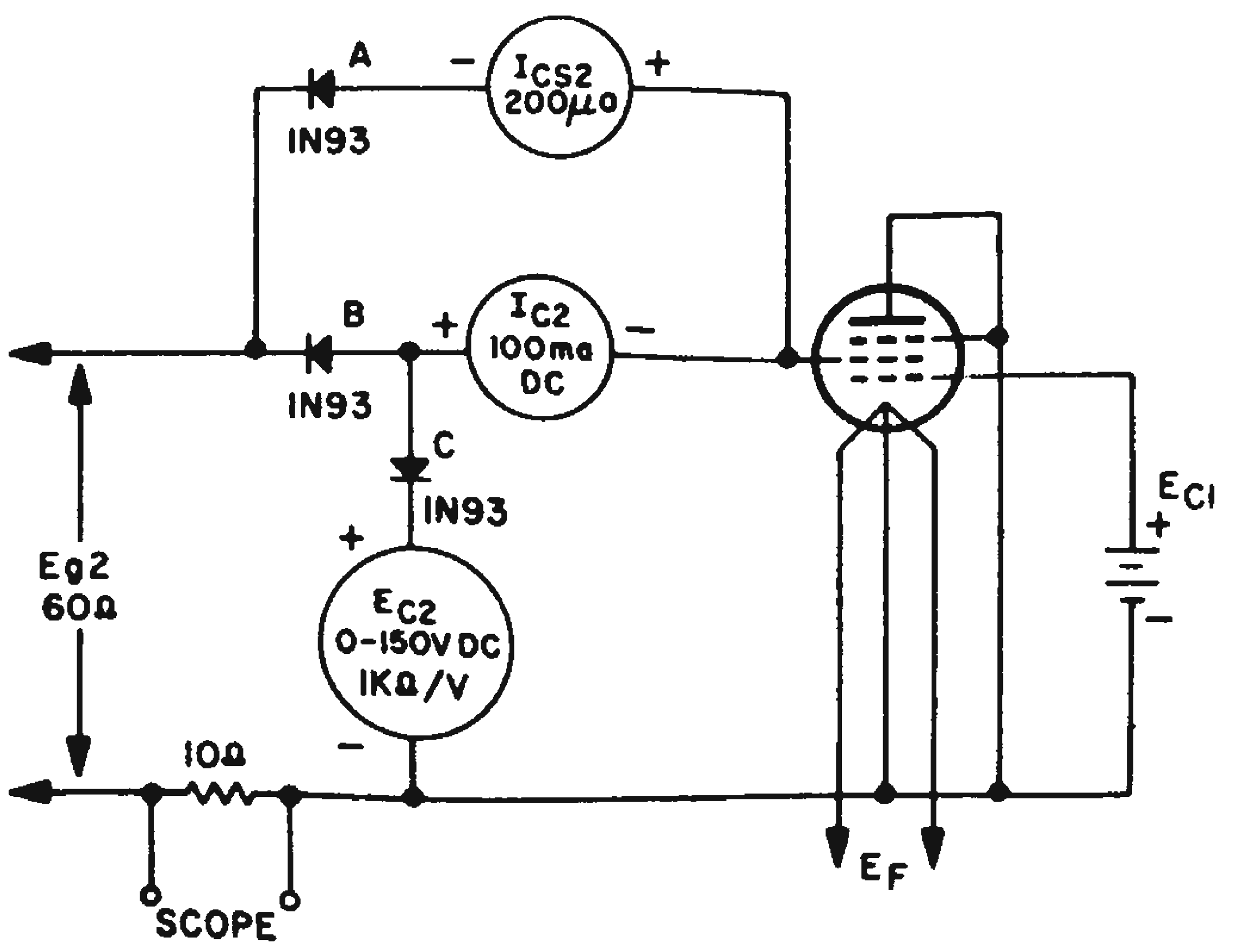

Reverse screen grid current is measured after tube has been operated at rated screen dissipation for five minutes.

during each cycle. This is observed on an oscilloscope placed across the 10-ohm resistor.

Control grid voltage E_{c1}, is set so the screen dissipation is not exceeded before the conduction angle of I_{c2} reaches 180 deg.

After dissipation has been applied for the specified time, the reverse grid current I_{cs2}, or primary screen emission, is measured. This measurement is made during the negative half of the input cycle.

H. E. Wood, Engineer, Lansdale Tube Co., Lansdale, Pa.

Switch Cover Protects Transistors from Transient Peaks

Power transformers deliver a husky transient "kick" when the primary current switch is turned "on" or "off." In many cases this can be costly. Two specific cases are:

(1) When using semiconductor rectifiers the transient voltage must be considered. This means higher rectifier cost, especially in the case of three phase full wave circuits.

(2) When a transformer-rectifier supply is used to power transistor circuitry, the transient is likely to exceed the transistor voltage rating, causing transistor failure.

Both of these conditions can be remedied in new or existing equipment by placing a small cover over the primary power switch. The cover is hinged, and must be lifted to operate the power switch. Lifting the cover operates a push button or microswitch, which disconnects the transformer from the rectifier in the first example—or disconnects the external load in the second case.

In one application, a high voltage supply, the cover switch operated an inexpensive relay, which disconnected the rectifiers. The relay cost $12, the rectifier saving was $180, a net gain of $168!

Bernard Daien, Bogue Electric Co., Paterson, N.J.

Polarized Relay Circuit Measures Duty Cycle Electrically

Measuring the duty cycle of a periodic pulse train is readily accomplished by driving a high-speed polarized relay, Fig. 1. The output is measured with a high impedance voltmeter and reads zero for a duty cycle of 50 per cent and full scale for 0 and 100 per cent. The polarity of the output changes as the duty cycle goes through 50 per cent. Accuracies of 0.1 per cent are readily obtainable for low frequency square waves.

The circuit uses an overdriven transistor to energize the relay. The stationary contacts are connected to accurate reference voltages and the moving contact is connected to an averaging network. The output of the network is an accurate representation of the charging time and polarity. The time constant should be selected to be at least ten times the period of the input.

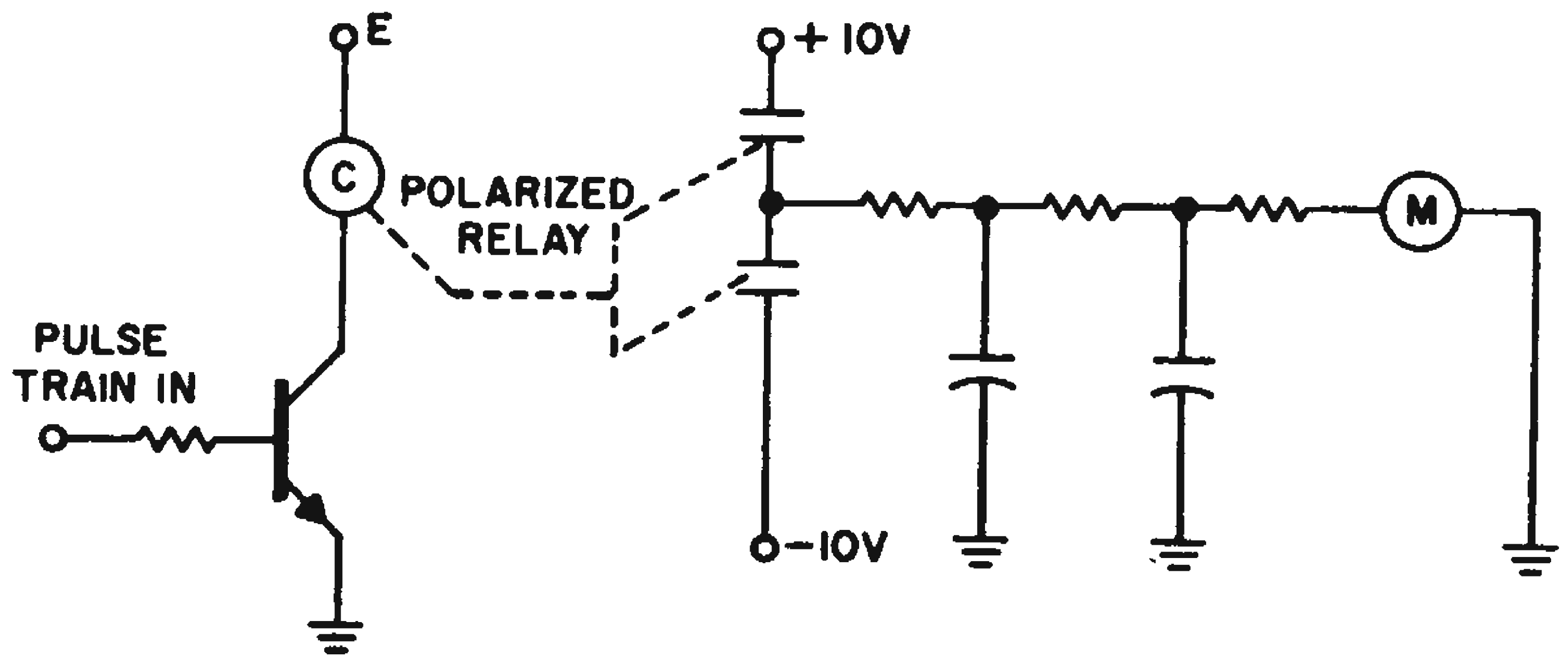

Fig. 1. High-impedance meter reads zero for a 50 per cent duty cycle, and full scale for 0 and 100 per cent.

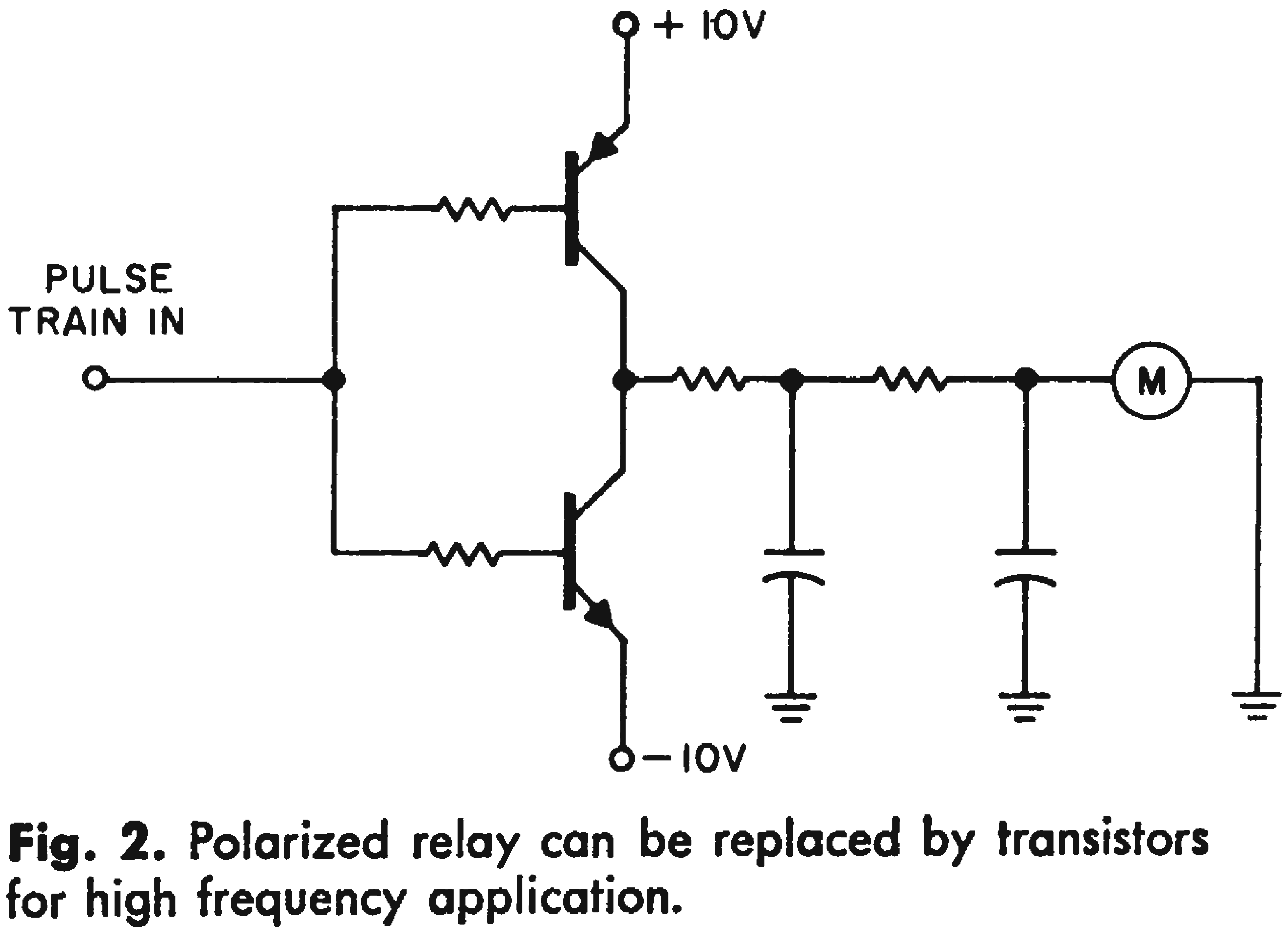

Fig. 2. Polarized relay can be replaced by transistors for high frequency application.

A high speed version of the device, Fig. 2, uses transistors throughout. The transistorized version can be used for high frequencies or where high accuracy is desired.

Jim Curry, Engineer, Tasker Instruments Corp., Hollywood, Calif.

Four-Resistor Decade Was Improved Upon

Referring to the "Four-Resistor Decade," submitted by Ralph U. Moody (*ED*, July 20, 1960, p 149), I would like to present my version, Fig. 1, designed in 1956.

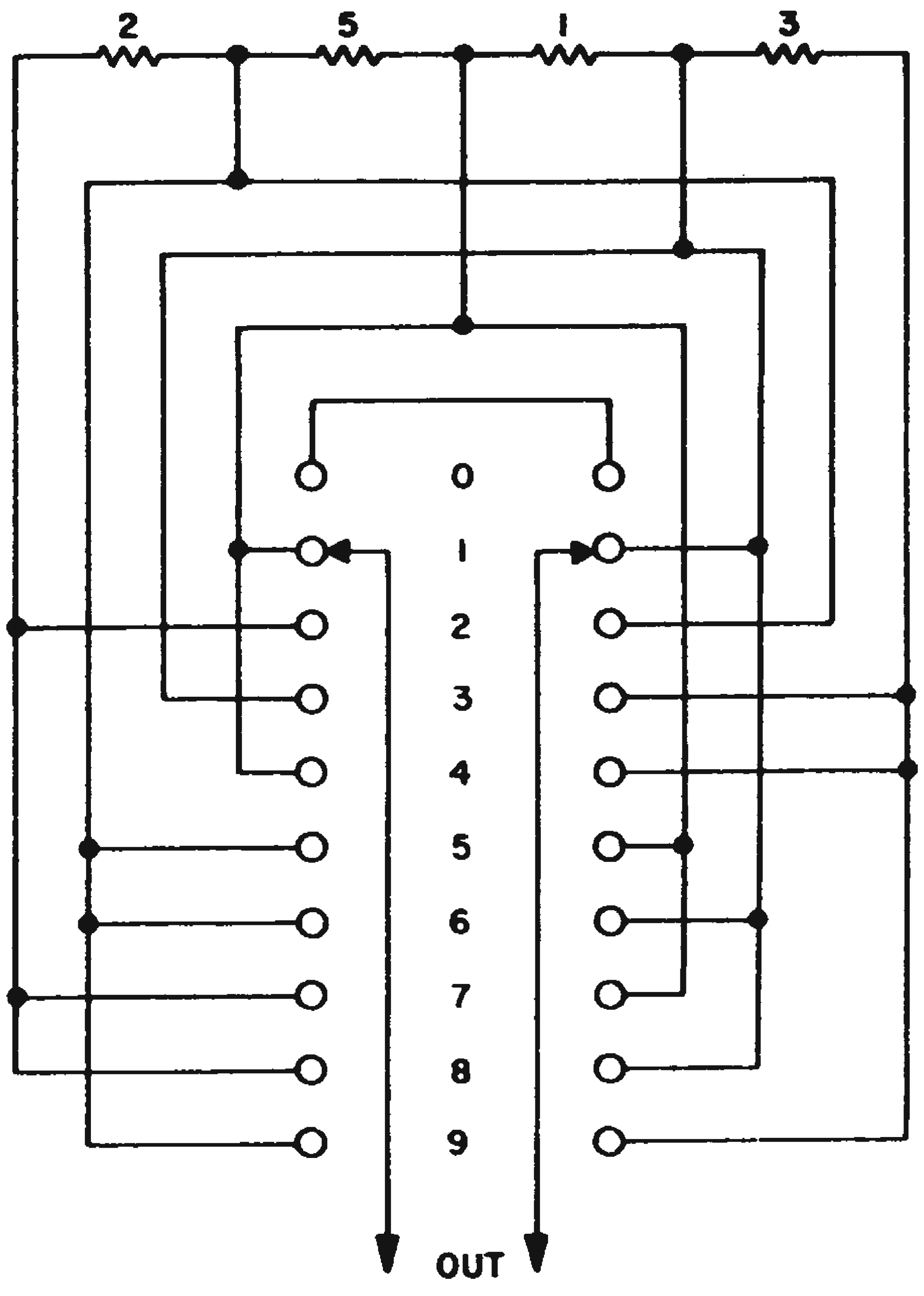

Fig. 1. Four-resistor decade.

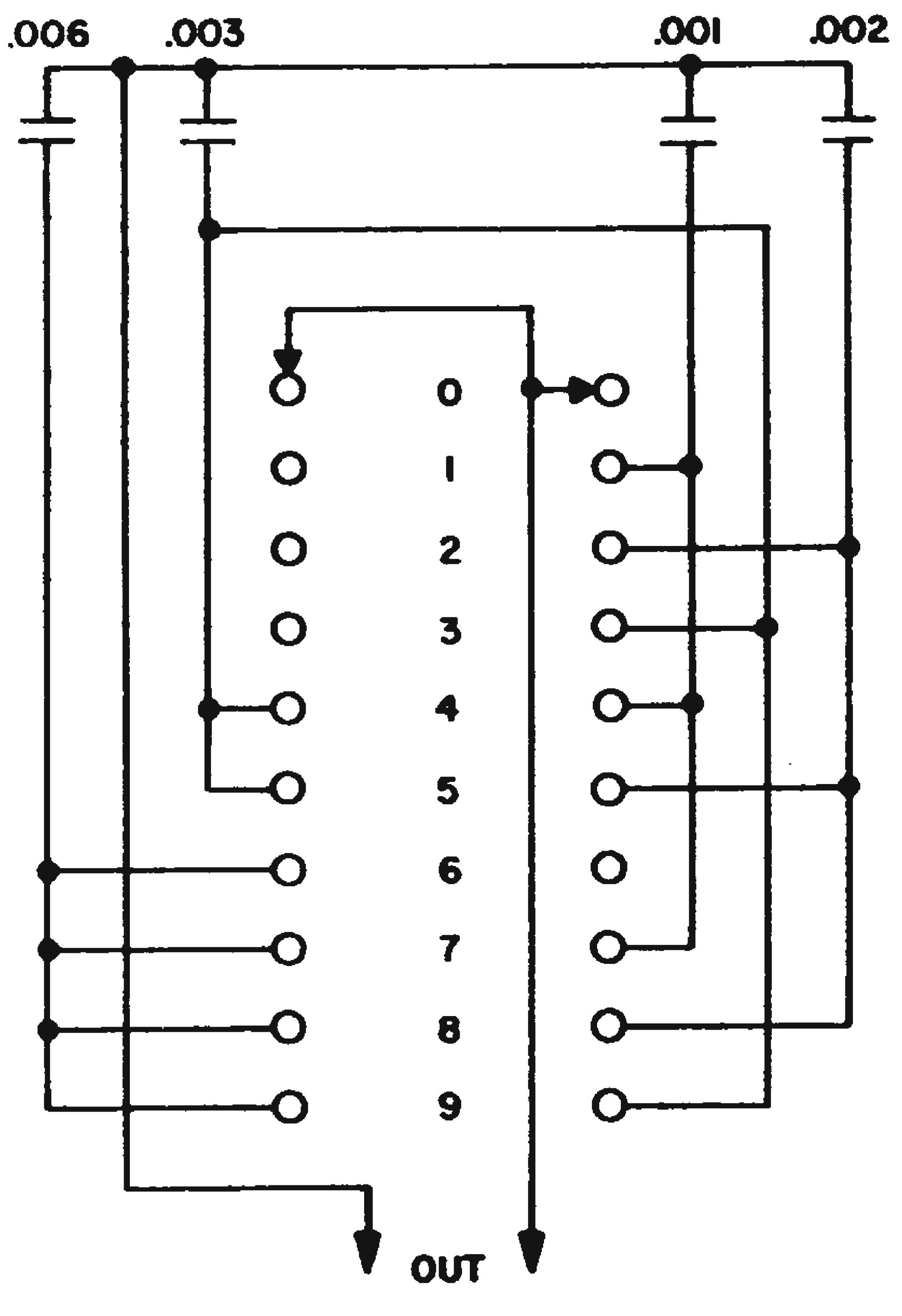

Fig. 2. Four-capacitor decade.

As you will note this circuit does not require shorting out any of the resistors although it uses the same type two-section, two-pole, 11 position rotary switch.

I would also like to submit my version of a "Four-Capacitor Decade" with the same type switch, which parallels the capacitors in numerical sequence.

Warren T. Abbott, Design Engineer, Convair Astronautics, San Diego, Calif.

Four-Resistor Decade Uses Standard Rotary Switch

Here's a resistor decade we set up using four resistors and a common two-section, two-pole, 11-position rotary switch. A special decade rotary switch is not required. The resistor values are in the indicated ratios.

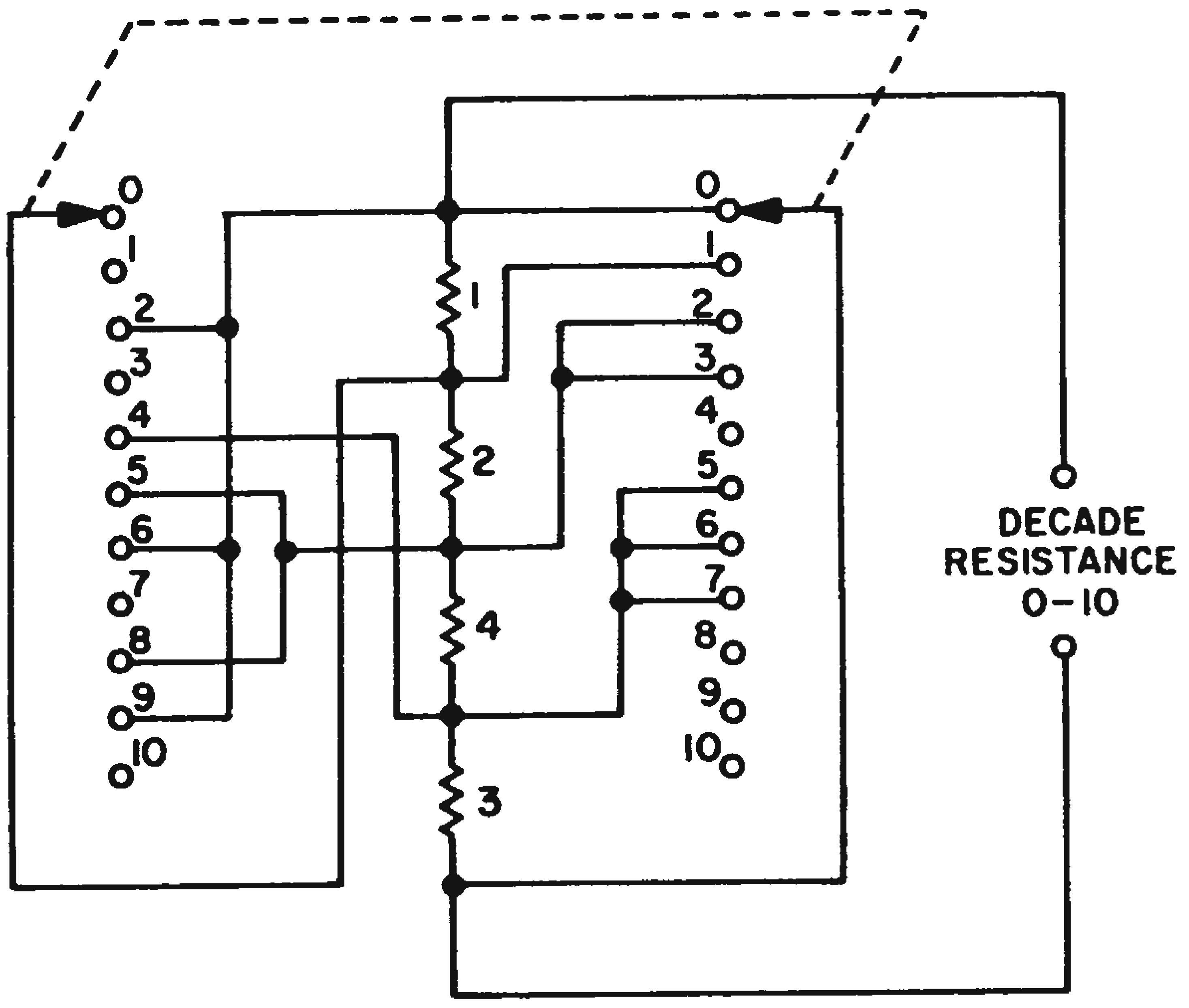

Ralph U. Moody, Design Specialist, Lockheed Missiles and Space Div., Van Nuys, Calif.

Plexiglass Reticle Helps Measure Dynamic Impedance

Investigation of the dynamic impedance characteristics of semiconductor diodes involves the measurement of the slopes of their characteristic curves. These slopes are not constant. The simplest method of displaying these curves is on an instrument such as the Tektronix Scope 570, Characteristic Curve Tracer.

The value of each slope can be easily deter-

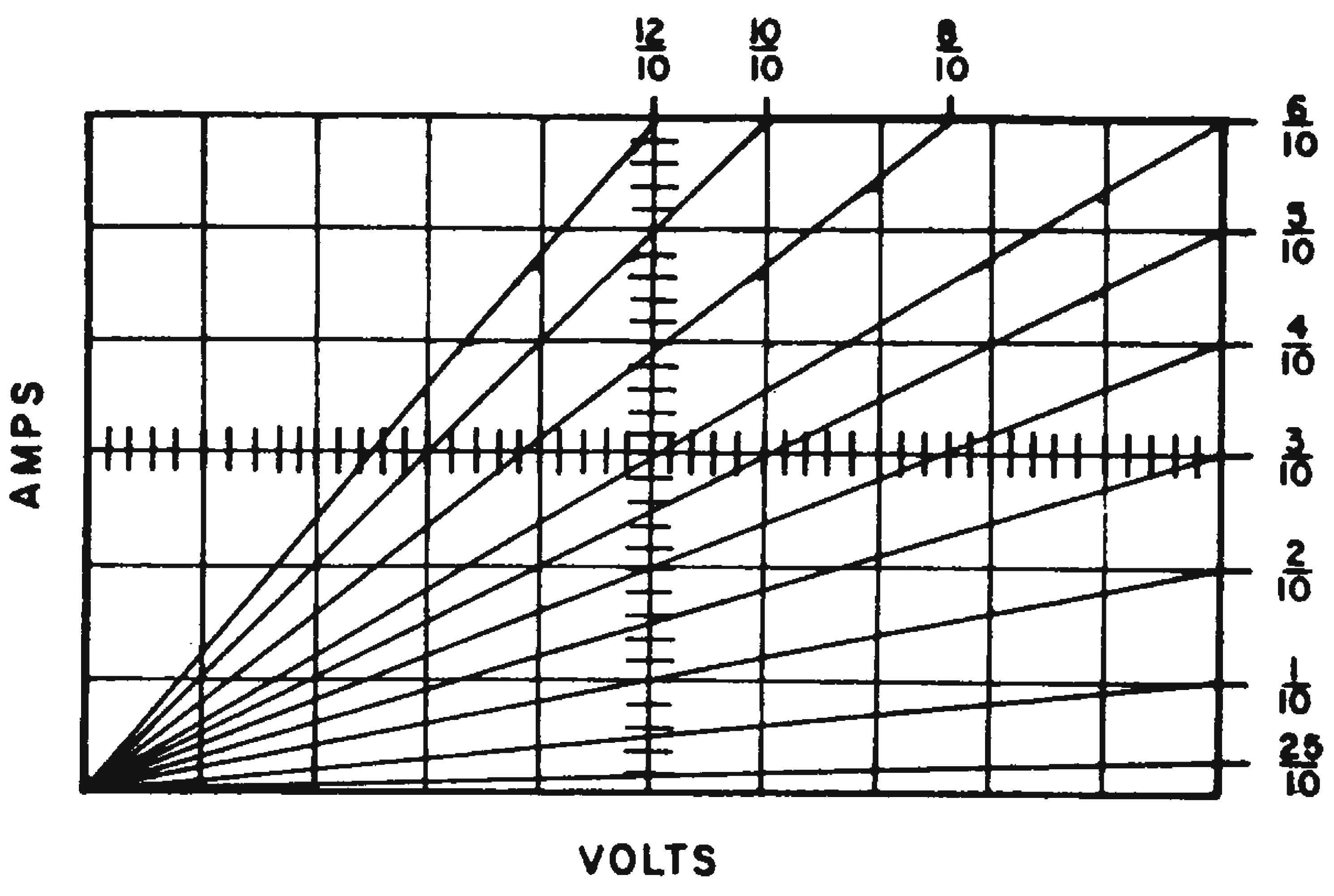

$$R = \frac{E}{I} = \frac{v/cm}{a/cm}$$

The differently sloped lines are scribed on a transparent piece of plexiglass which is placed over the crt screen.

mined by scribing lines on a plexiglass reticle and placing it over the crt screen. In operation, the trace is moved on the screen until it matches the proper slope line, giving an immediate impedance reading.

Gerald Solomon, Engineering Techniques Dept., Burroughs Corp., Research Center, Paoli, Pa.

Biased Base Clipper Isolates WWV "Tick" Tone

We wanted to obtain the seconds "ticks" of station WWV without any other frequencies being present. The "ticks" from WWV consist of 5 msec of 1,000-cps tone. In the application, the output from the WWV receiver was first passed through a 1,000-cps filter. This didn't prove to be quite satisfactory since the other tones that WWV transmits (440, 600 cps) were still audible, although at a lower level.

After some breadboard experimenting we came up with the circuit shown in the figure. Here, the 1N98 diode and the 2N525 transistor form essentially an automatically biased-base clipper. The audio signal input is rectified and filtered by the transistor and the large capacitor in the emitter circuit. The output across the 10-K resistor in the emitter of the transistor is dc or slowly varying ac. This slowly varying ac is applied to the diode so as to reverse bias it.

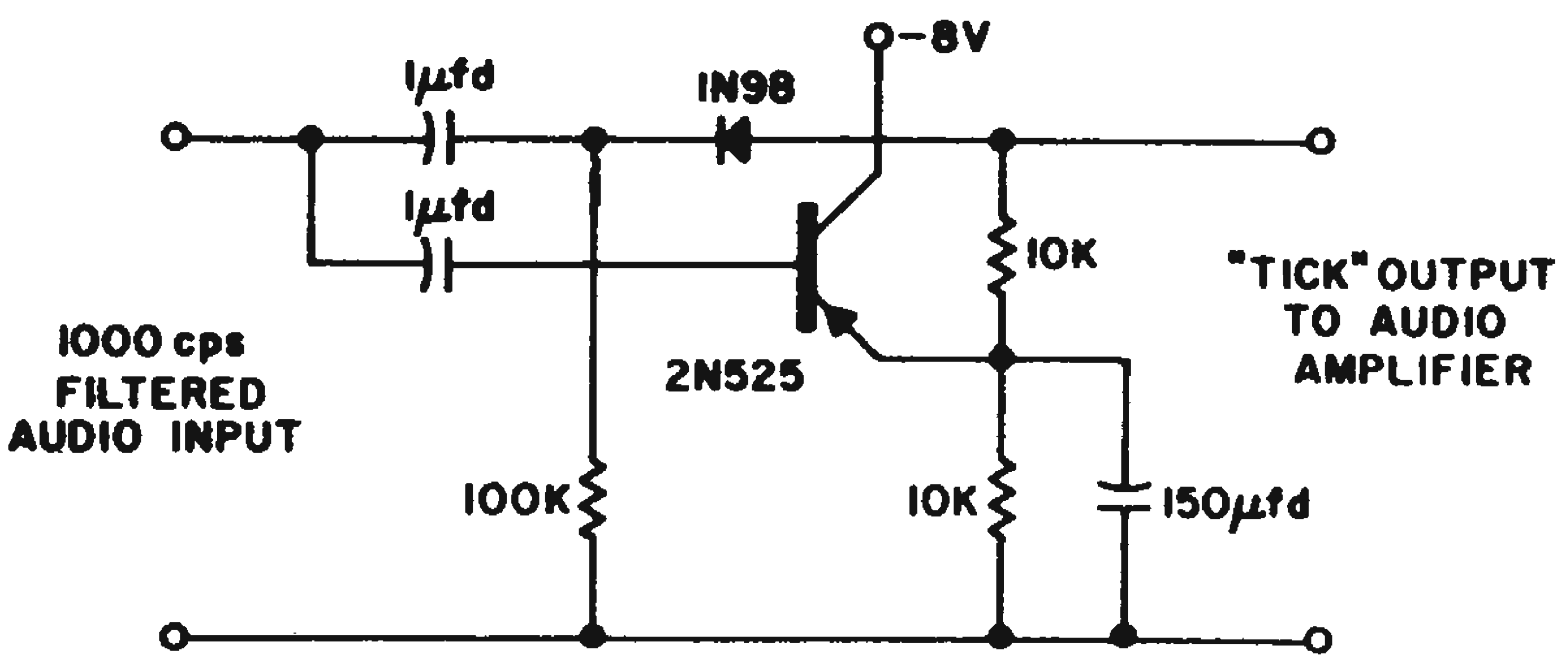

Short-duration 1,000-cps "ticks" ride through, but the longer, unwanted signals are squelched by the back-biased diode.

The amplitude of the "tick" output from the 1,000-cps filter is always quite a bit larger than the other tones, although all of the tones vary in amplitude according to the strength of the WWV signal and noise. When a "tick" comes in, the bias voltage can't respond quickly enough and the "tick" passes through the diode to the final audio amplifier. The 440- and 600-cps tones are on for a longer period of time than 5 msec. Because these other unwanted modulations create a back bias on the diode, they do not appear in the output.

Thomas E. Fay, Electrical Engineer, Mechanical Div. of General Mills, Inc., Minneapolis 13, Minn.

Search Coil Locates Noise-Sensitive Circuit Trouble-Spots

A handy little noise generator was constructed to help design certain high-impedance, voltage-sensitive circuits to be insensitive to relay contact noise and arcing.

The circuits, containing thyratrons and Shockley diodes, worked quite well in the breadboard stage. However, when wired into a cabinet with many operating relays, they were constantly being prematurely triggered.

The noise generator shown was used in the design of new circuits which would be insensi-

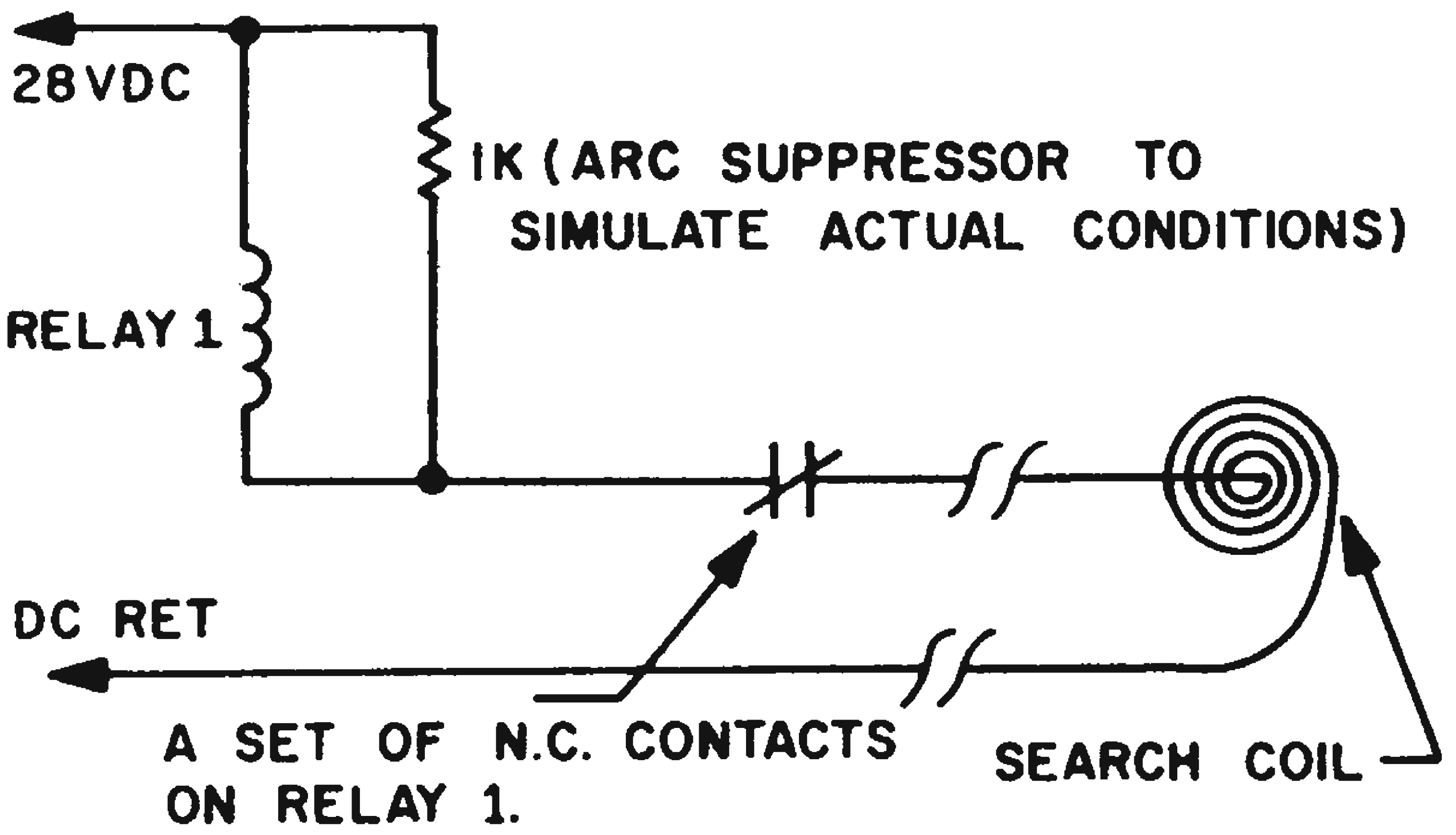

The search coil, held near points suspected of being sensitive to relay noise and arcing, quickly locates possible circuit trouble spots.

tive to the relay noise. It was also used to check out the existing ones. The search coil, consisting of several turns of hook-up wire, was held near suspected leads and circuit points. The opening and closing of the contacts simulated in the search coil the fields actually encountered in the completed equipment. Possible areas of premature triggering were quickly located while the circuits were still in the breadboard stage.

Carl R. Faix, Design Electrical Engineer, RCA, Moorestown, N. J.

Oscilloscope Mask Permits Rapid Digital Readout

The oscilloscope mask shown in the figure permits rapid reading, in digital form, of numerical information. The mask, made of metal or cardboard, consists of two lines of holes of as many binary places as one is interested in reading. Vertical lines are drawn on the face of the mask to show the octal division of each word.

In use, the scope trace length is adjusted to match the digit spacing drawn on the mask. The trace is positioned in the vertical direction so that the base level is in line with the holes in the mask. Thus, reading from left to right, the octal readout shown in the sample photograph is 701010.

Because the mask is separated from the tube by the plexiglass grid, parallax problems may develop if the observer is not directly in front of the tube. Making the holes small in relation to the digit width will reduce this parallax effect and will permit wider viewing angles. Or, if the scope trace is broadened by advancing the astigmatism control, the trace will fill the holes instead of appearing as sharp lines.

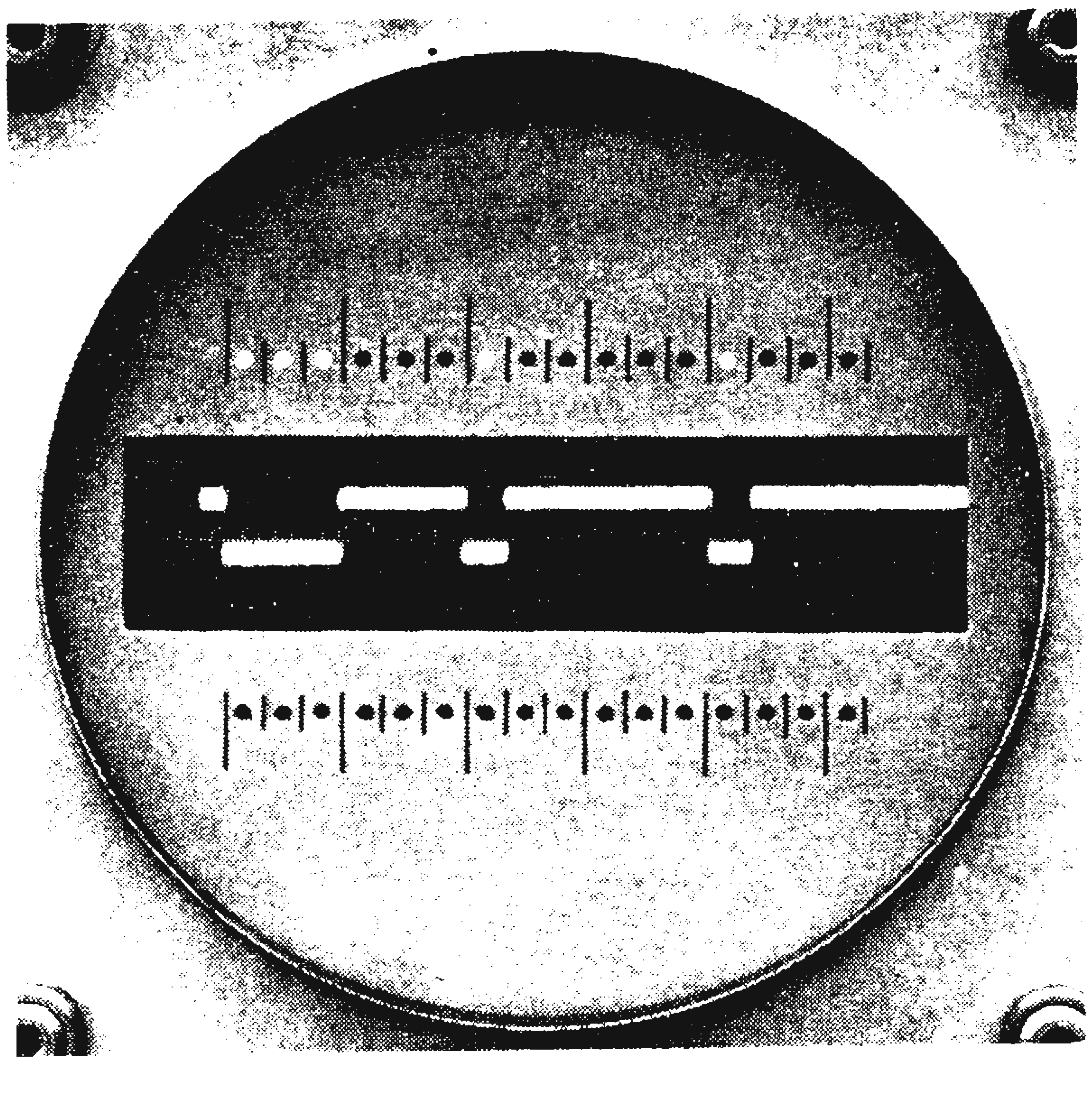

Placed over the oscilloscope tube face, the cardboard mask permits the display to be rapidly transformed to a digital form.

The central portion of the mask shown has been cut out so that the scope can be used in the normal manner without removal of the mask from the scope. With a dual trace unit the set of octal numbers can be read by means of the upper set of holes.

Eugene W. Herr, Computer Engineer, Emerson Electric Mfg. Co., St. Louis, Mo.

Transistorized Pot Allows Fine DC Voltage Adjustments

When breadboarding and testing transistor circuits, it is often desirable to have a fine voltage adjustment of a low dc voltage source. Many times a variable low dc voltage supply is unavailable due to the many laboratory demands for these units. Most laboratories, however, have batteries or 28 vdc lines at hand. The transistorized voltage adjuster shown here is a simple and effective circuit for providing a continuously variable lower voltage from these fixed dc sources. Its major advantage, as compared to a power potentiometer, is that it presents a high-line impedance (above 10,000 ohms) while handling currents up to 200 ma.

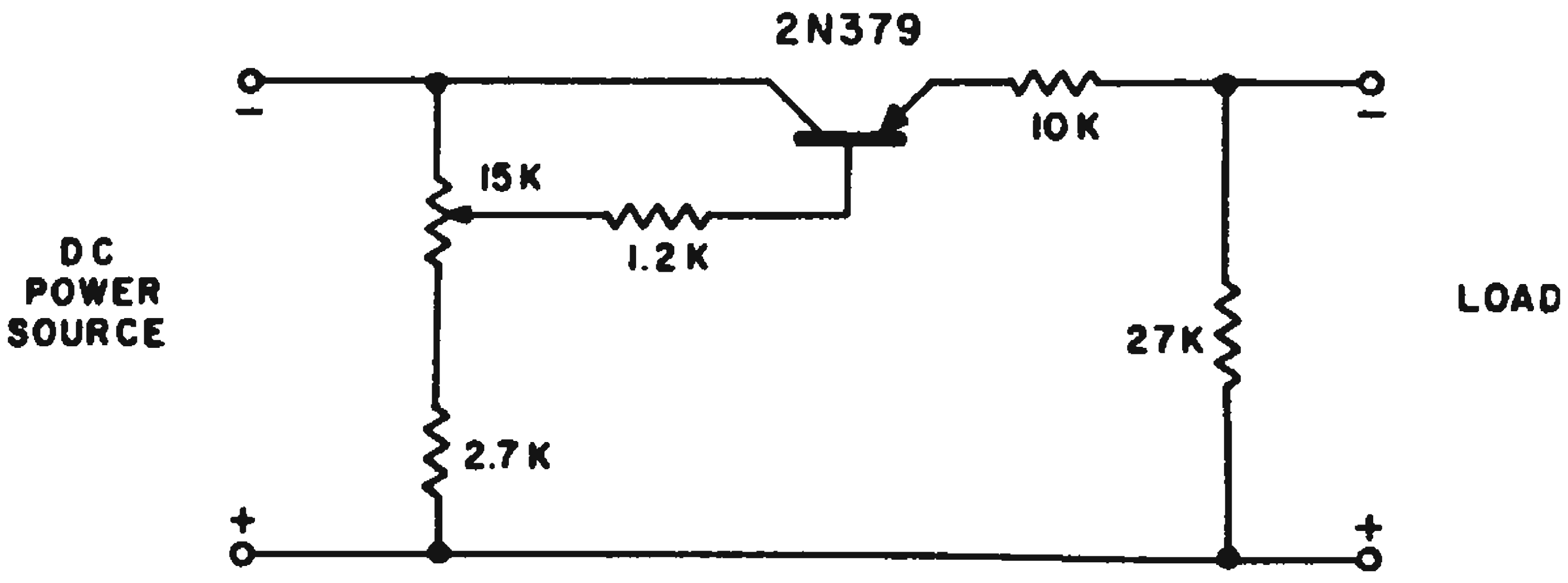

A transistorized potentiometer provides a fine voltage adjustment of a low dc voltage source, while presenting a high-line impedance.

The two input leads are connected to the respective terminals of the dc power source and the load is connected directly to the output. All circuit power is supplied by the source and no other connections are necessary. In effect, the transistor is used as a variable series resistance element.

The 15-K potentiometer provides the adjustable bias, thus varying the effective resistance of the transistor. The 2.7-K and the 1.2-K resistors are used for base-current limiting. The 10-ohm resistor is used as a fuse to limit the output current to a maximum of 250 ma. For the transistor shown, the input voltage should not exceed 70 v. None of the components are critical and can be changed to meet individual requirements, although the allowable transistor power dissipation should be considered.

William B. Turner, Senior Engineer, Fairchild Astrionics Div., Fairchild Engine and Airplane Corp., Wyandanch, L.I., N.Y.

Q-Meter Measures IF Chassis' Resistivity

In designing an if chassis it was necessary to compare the rf resistivity of several metals and platings. This was simply done by connecting sample strips of metal in series with a series-resonant circuit and noting their effect on "Q". The resistance value for each strip was then calculated at the intended operating frequency. For best accuracy the series coil should have a high *Q* to cause a near maximum deflection of the *Q*-meter.

In our laboratory set-up, measurements were made at 11.5 mc. A solenoid coil 1 in. in diameter was wound with 4 turns of #10 AWG. Its inductance was 0.5 µh. The metals to be compared were cut into strips 1-1/2 by 3/8 in. Three holes were drilled into each strip: one 1/4 in. hole to fit the *Q*-meter terminal, and two holes spaced 3/4 in. to fit the coil wire (#37 drill). The first strip, made of brass, was fastened to the *Q*-meter "Low" terminal. One end of the coil was soldered into the first wire hole, and the other end connected to the "High" terminal. The "Q" was found to be 233 at 11.5 mc. The coil was then soldered into the second wire hole in the strip, and the "Q" now measured 225. Since $R = X_L/Q$, and $X_L = 37$ ohms, the two values of *R* are 0.159 and 0.164 ohm respectively. The difference between the two values is 0.005 ohm. The process was then repeated with other materials, and the results compared.

Herbert H. Lenk, Cincinnati, Ohio.

Selecting Proper Resistance Simplifies VTVM Range Divider

When designing the input voltage divider (range switching network) for a dc vacuum tube voltmeter, it is convenient to select 10 meg as the total resistance. But this causes each resistance (except the lowest) in the string to have an odd value, obtainable only by connecting several resistors in series.

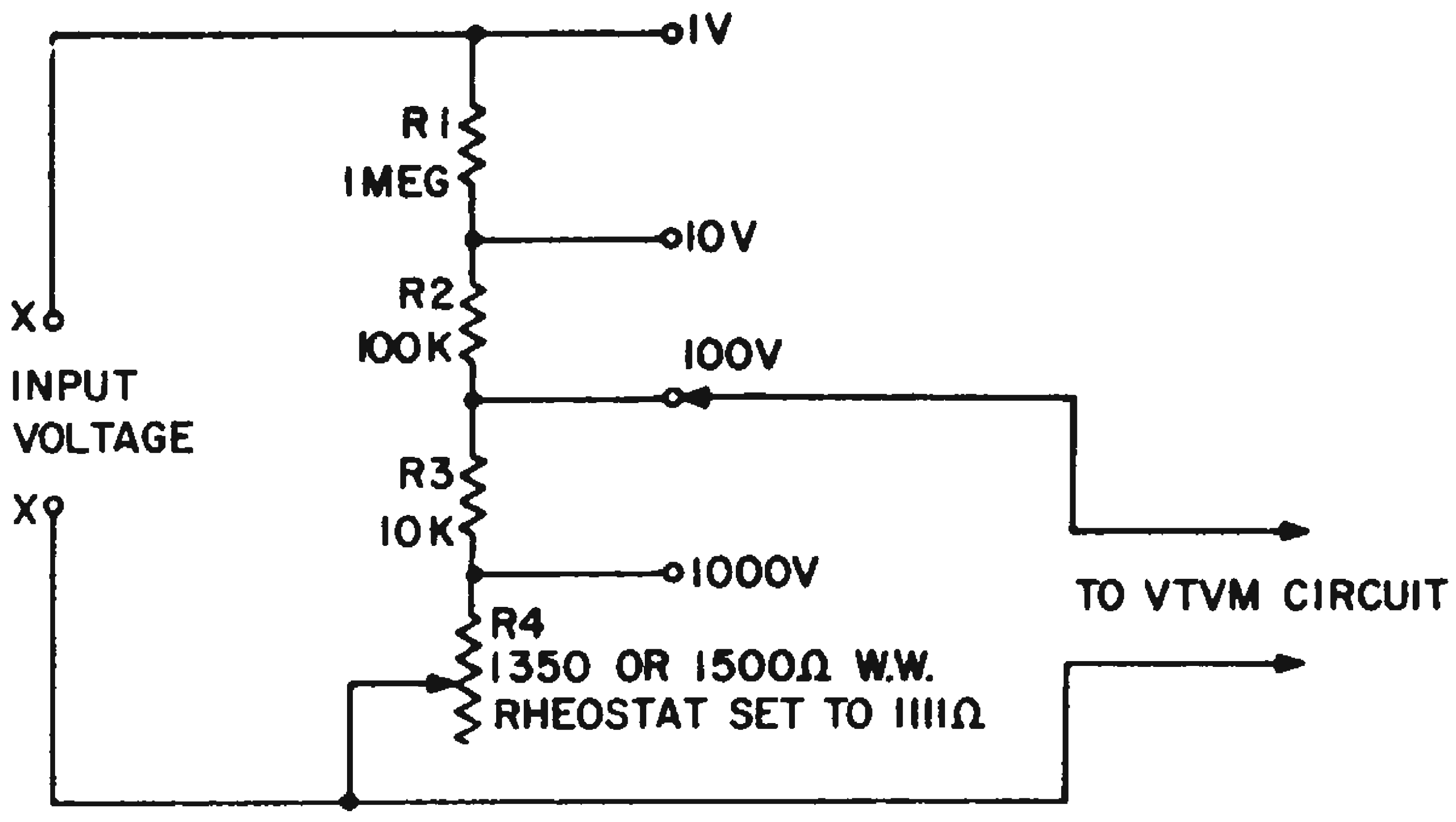

Voltage divider can be simplified by selecting the total resistance to be 1,111,111 ohms.

The divider can be simplified by selecting 1,111,111 ohms for the total resistance. (There is nothing sacred about the customary even 10 meg.) When this is done, all except the lower resistor (R_4 in the accompanying illustration) can have even values obtained with single resistors. The 1,111-ohm unit (the only odd-valued one) may consist of one each 1000-, 100-, 10-, and 1-ohm resistors in series. Or, for further simplification, may be a miniature 1,350- or 1,500-ohm wirewound rheostat, as shown, set to 1,111 ohms with a standard input voltage applied to terminals X-X.

Rufus P. Turner, Consulting Engineer, Los Angeles, Calif.

Diode Calibrates RMS Meter For Noise Voltage Readings

A temperature-limited diode can be used to recalibrate a standard rms meter to give correct readings of noise. This recalibration is necessary because an rms meter is designed to measure pure sinusoids only. The waveform of a noise signal is decidedly nonsinusoidal.

The calibrating device works on the principle that the current through a temperature-limited diode is a function of the heat generated in its filament. Since the heat generated is proportional to the rms voltage applied, the current through the diode is also a function of its rms filament voltage. Thus, if a noise voltage is applied to the diode filament, its plate current will be a measure of the rms value of the voltage.

The calibrating circuit shown in the figure uses a low impedance amplifier to drive the diode's

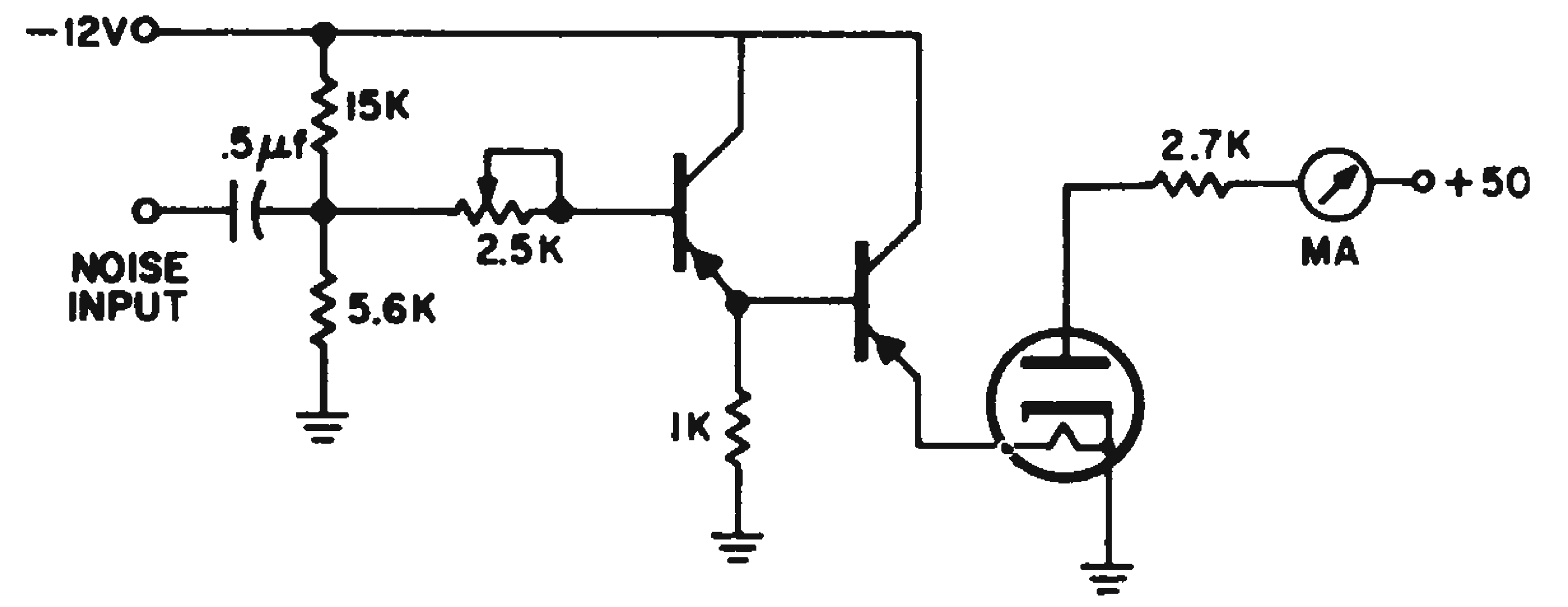

filament. The rms voltmeter can be calibrated by the following procedure.

A known sine wave signal is applied to the input of the amplifier. The current through the diode and the deflection of the rms meter is noted. A sample of the noise to be measured is next applied and adjusted to give the same current reading as recorded for the sine wave. The noise voltage is then measured on the meter. The ratio of the sine wave voltage reading to the noise voltage reading is the calibrating factor. That is, the quantity the rms meter readings must be multiplied by this factor to give the correct rms noise voltage value.

Gwynn M. Reel, Design Specialist, Airborne Electronics, Martin-Orlando, Orlando, Fla.

Universal Ratio Set is Suitable For Voltage Comparisons

The universal ratio set is well known for its accuracy and convenience as a device for comparing precision resistors.(1) However, it can also be used as a voltage comparator.

This use may be illustrated by considering the problem of comparing the electromotive force of a standard cell to that of a normal (reference) cell. The test circuit is shown in Fig. 1. As the first step, switch S-2 is closed and rheostat *R* is adjusted to produce a null at detector 2. At null, the voltage drop from *A* to *B* is equal to the sum of the electromotive forces of the two cells. Switch *S-1* is then closed and the universal ratio set dials are adjusted to provide a null at detector *1*. At this null, the voltage drop across *R1* is equal to *E1*, the electromotive force of the normal cell. When both null conditions are satisfied, the following ratios are obtained:

$$\frac{E_2}{E_1} = \frac{IR_2}{IR_1}, \quad \frac{E_2}{E_1} = \frac{R_2}{R_1}$$

It is clear that

$$E_2 = \left(\frac{R_2}{R_1}\right) E_1$$

and the accuracy of the comparison is dependent on the accuracy of ratio of the ratio set. Commercially available ratio sets provide ratio accuracies from 0.01 to 0.005 per cent. Care must be taken when wiring and operating the test circuit to minimize errors due to thermal emf's.

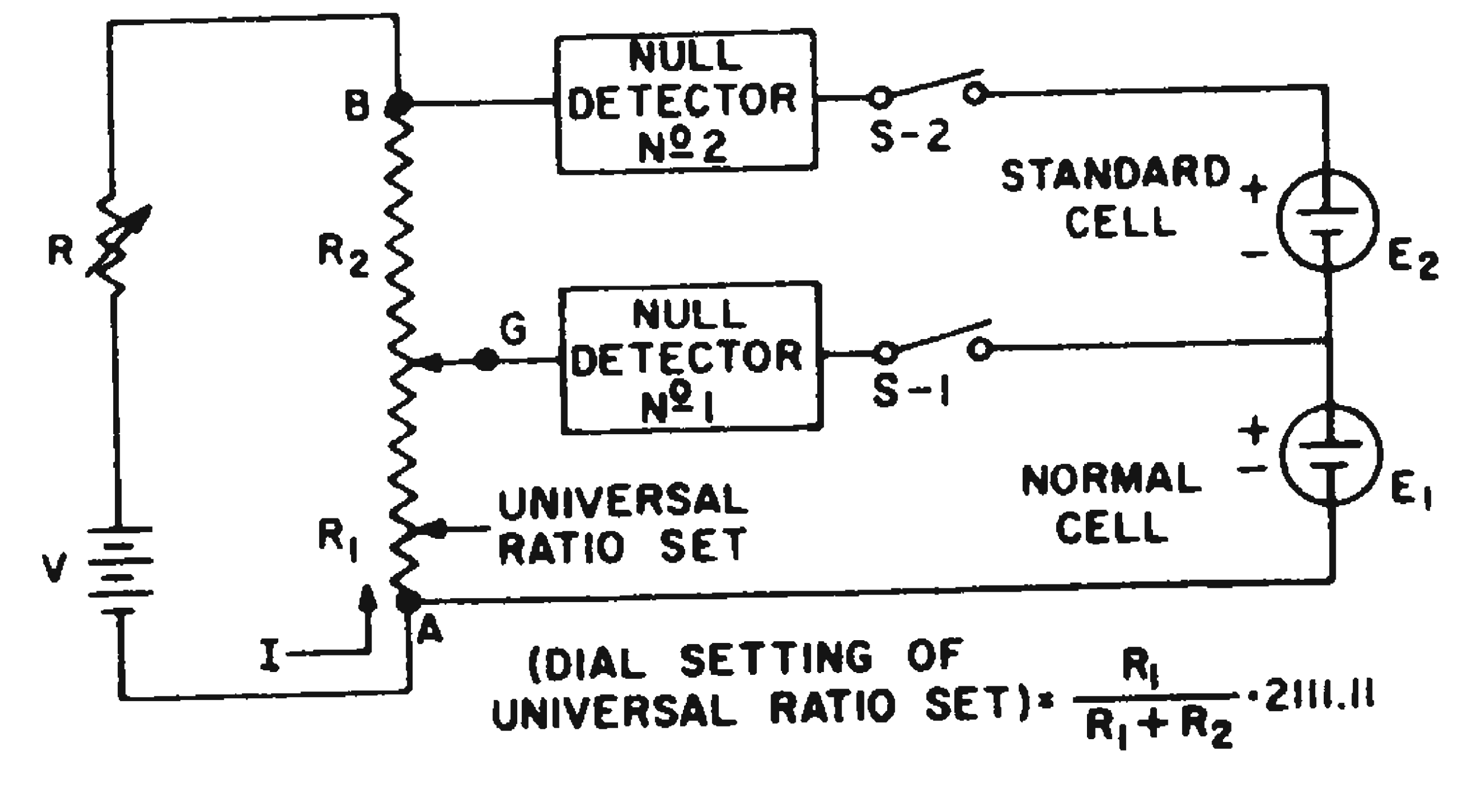

A universal ratio set can be used to compare voltages as well as to compare precision resistors.

Double-Substitution Technique for Greater Accuracy

If greater accuracy is desired, together with greater freedom from the effects of thermal electromotive forces, a double-substitution technique can be used. A first reading is taken as described above. A second reading is then taken with the cell positions interchanged. The value of the unknown E_2 is then determined from:

$$E_2 = \left(\frac{D_2}{D_1}\right) E_1$$

where D_1 is the first dial setting and D_2 is the second dial setting. Accuracies of a few parts per million are possible with this method.

Kenneth H. ReCorr, Radio Corporation of America, Electron Tube Div., Harrison, N.J.

Voltmeter-Variable Resistor Measures Zener Current

To measure the current flowing through a Zener diode without breaking the circuit, connect a voltmeter and variable resistor across it as shown in the figure. The variable resistance is then reduced until the voltmeter reading just starts to drop. At this point the resistor is absorbing all the current which used to flow in the diode. The resistance may then be measured and Ohm's law used to calculate the current, or an ammeter may be used as shown. The accuracy of the measurement is determined by the sharpness of the Zener breakdown, which is usually described by the diode's manufacturer.

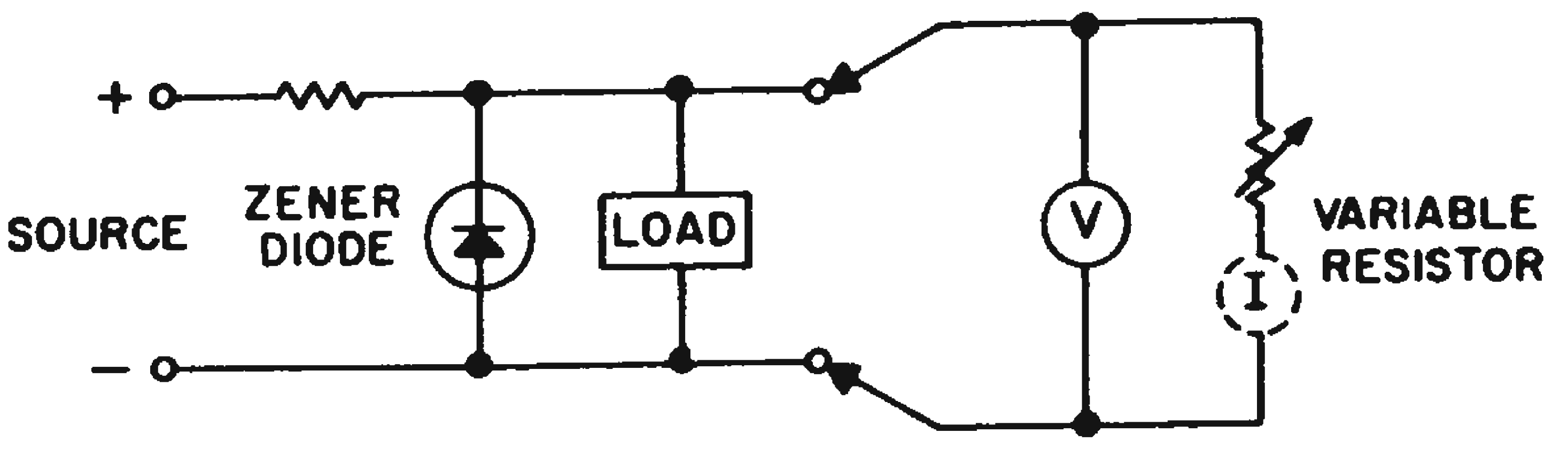

Current in variable resistor equals Zener diode current when voltmeter reading begins to drop as resistance value is reduced.

David J. Goldman, Electrical Engineer, Di/An Controls, Inc., Boston, Mass.

---

(1) J. L. Thomas, "Precision Resistors and Their Measurement," *NBS Circular 470*, Oct. 8, 1948.

Diodes Checked Out On Single 60-Cycle Tester

Here's a simple testing circuit we devised for the rapid processing of semiconductor diodes. With the diodes placed across the test clips, the set-up determines its polarity, or whether it is shorted or open. An alternating, rather than dc, voltage is used.

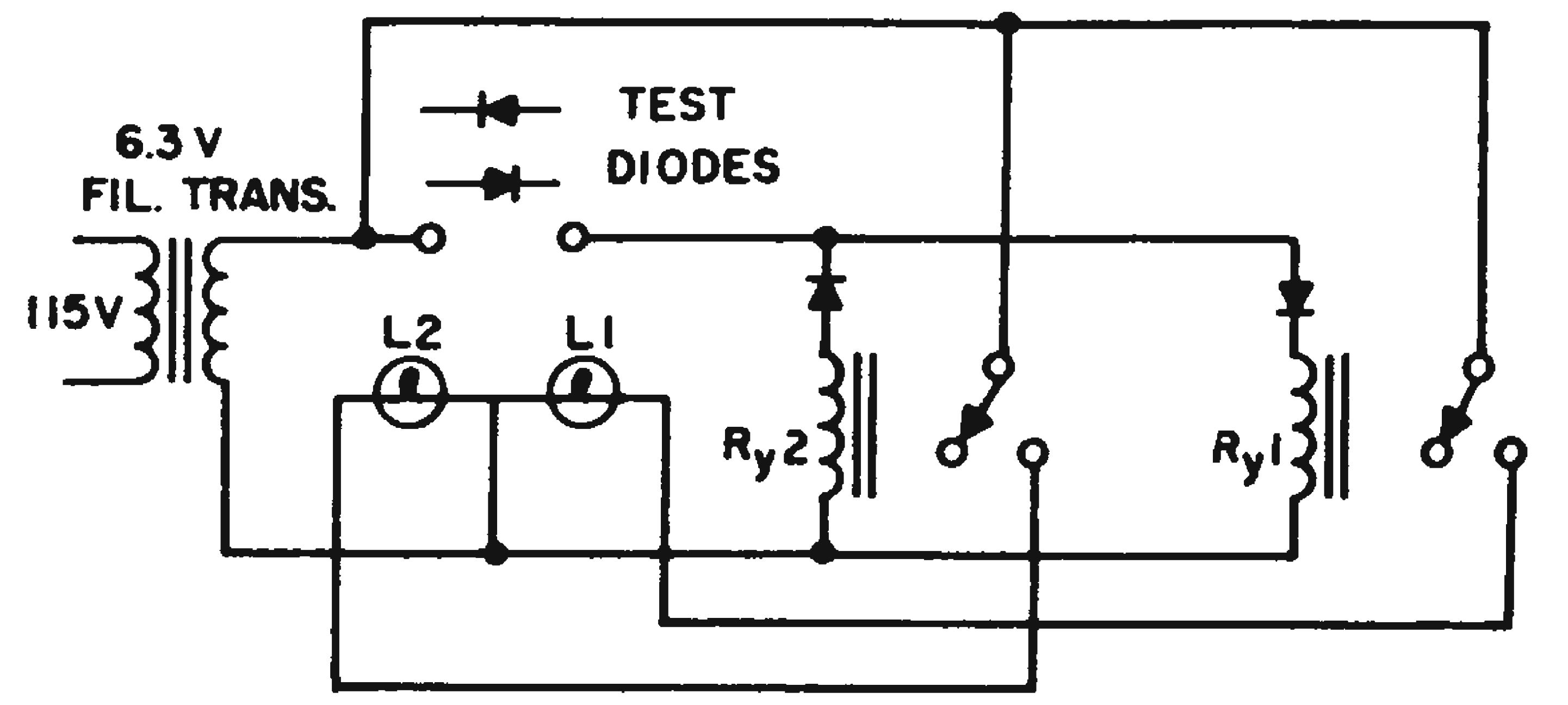

Diodes placed on test clips can be rapidly checked on this 60-cycle, rather than dc, tester.

The circuit works as follows:

Cathode placed to right	— Relay No. 1 operates and lights *L1.*
Cathode placed to left	— Relay No. 2 operates and lights *L2.*
Short circuit	— Both relays and both lamps operate
Open circuit	— Neither relay or lamp operates

Raymond J. Shaughnessy, Text Engineer, Raytheon Co., Brighton, Mass.

Z-Axis Blanking Helps Determine Lag or Lead

Oscilloscopes of even modest caliber provide reasonably accurate measurements of sinusoidal phase angles by means of Lissajous patterns. This technique falls short in determining whether the unknown voltage or current vector leads or lags the reference vector.

By simply applying a blanking pulse to the Z axis, one can easily determine leading or lagging conditions.

Assume an unknown voltage vector lags the reference voltage vector anywhere between 0 and 180 deg. Connect the reference vector to the Y axis, the unknown to the X axis. Though not apparent to the eye, except at very low frequencies, the resultant Lissajous pattern is formed by the electron beam moving in a clockwise path. This path remains clockwise for phase shifts anywhere between 0 and 180 deg.

If the unknown voltage vector leads the reference voltage vector anywhere between 0 and 180 deg, the electron beam will move in a counterclockwise path.

The time required for the beam to complete one revolution is the same as the period of the applied frequency.

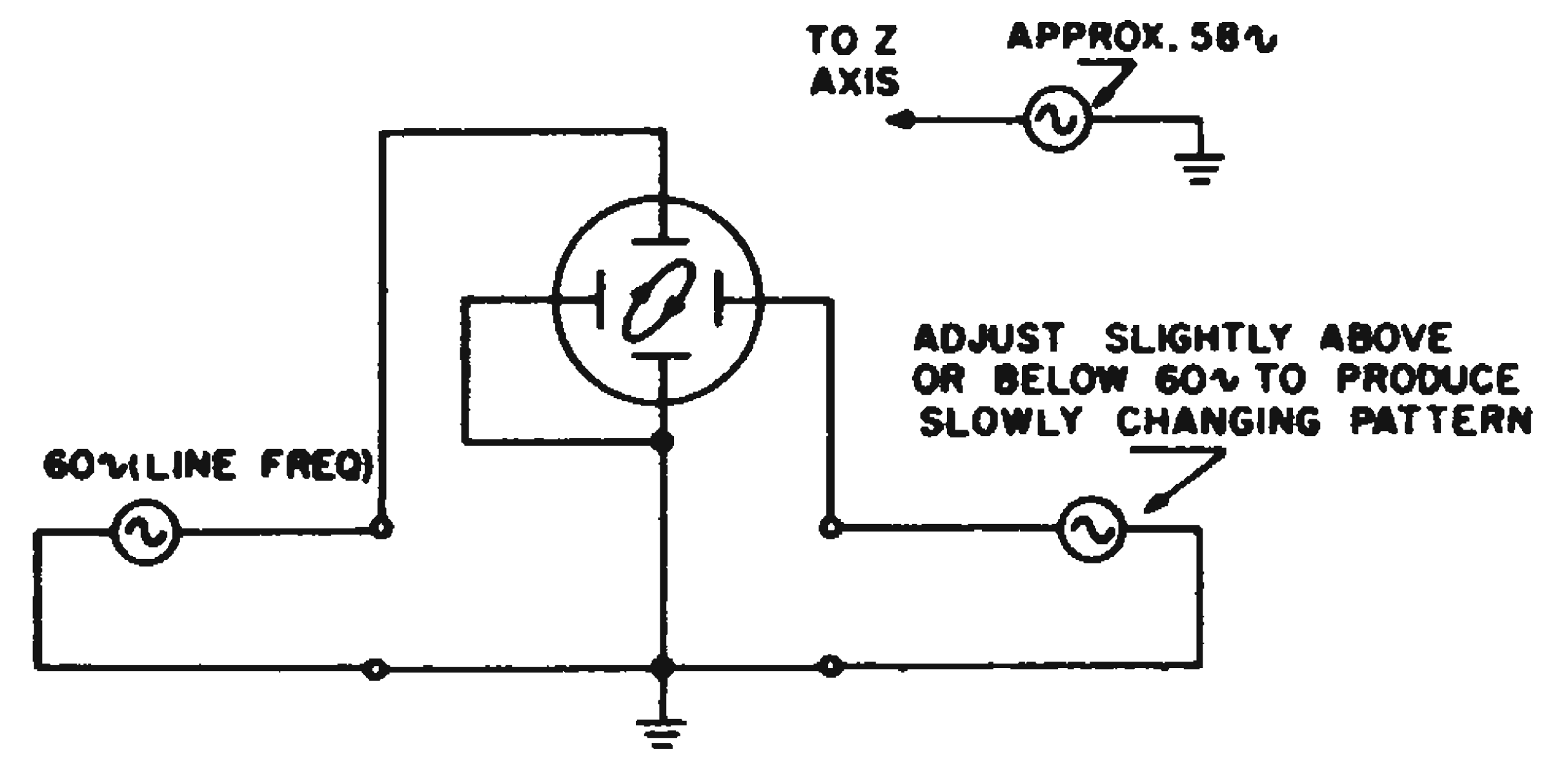

Slowly changing Lissajous pattern ilustrates direction of beam rotation for leading and lagging phase shifts from 0 to 180 deg.

It follows that a blanking pulse (practically any wave shape) applied to the Z axis, with a frequency equal to that present at the X and Y axis, will tend to blank out a portion of the Lissajous pattern. The blanked out portion will appear stationary. Decreasing the blanking frequency slightly forces the blanked portion to move in the direction of beam rotation; clockwise for lagging phase shifts, counter clockwise for leading phase shifts.

The foregoing applies to oscilloscopes that display a 0-deg phase shift in the first and third quadrants.

Michael Rakochy, Bell Telephone Labs., Allentown, Pa.

Current Amplifier Increases Null Meter Range

A meter-indicating device to respond to ±5 v was needed, and needed quickly. No instrument was on hand that could handle such voltages.

The problem was solved by using a pnp and an npn transistor as a current amplifier to drive a center-zero 1-ma meter which was available.

The resultant circuit, shown in the figure, worked very well. No switch is required for the batteries, since, when the initiating voltage is removed, battery current is only a few microamperes. The device could also be used as a tuning meter for an fm receiver.

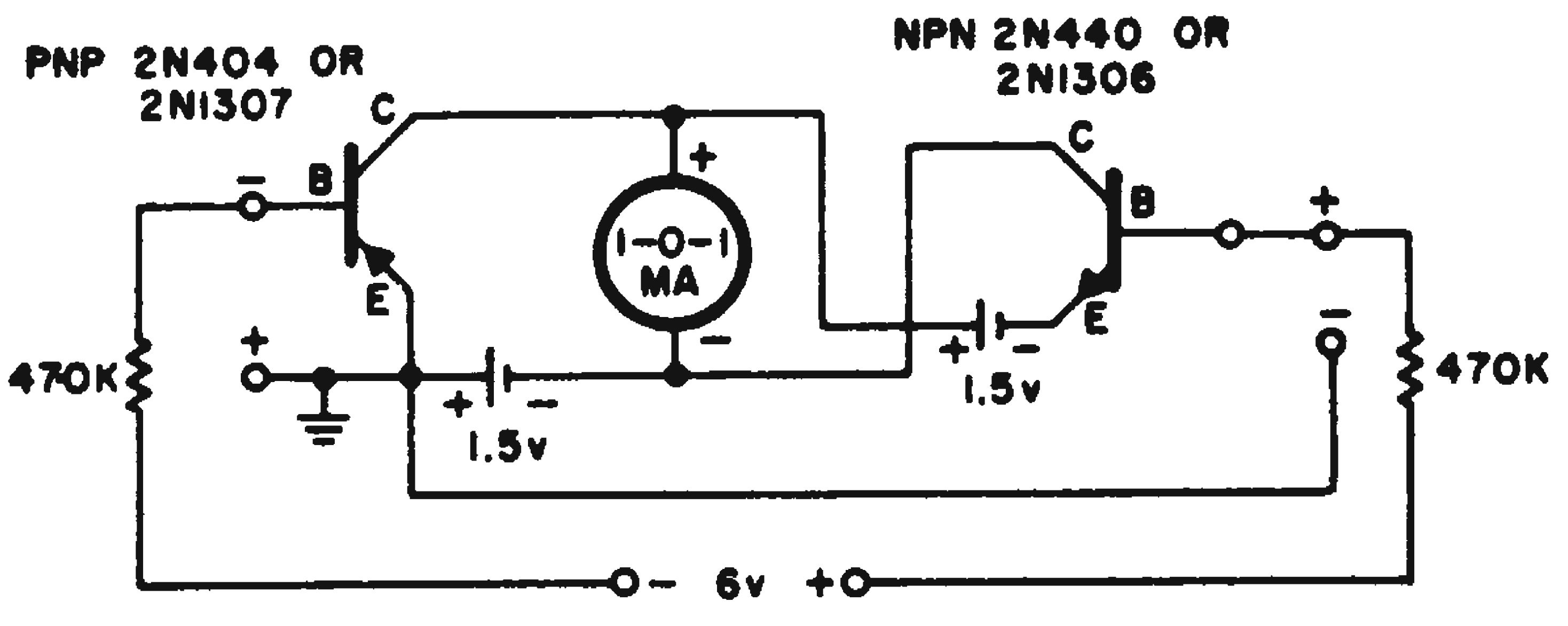

Range of 1-ma center-zero meter is increased by driving it with transistorized current amplifier. Circuit was used to indicate ±5-v levels.

L. C. Pochop, Electronic Engineer, U. S. Naval Ordnance Laboratory, Corona, Calif.

Two-Transistor Circuit Increases Null-Detector Sensitivity

The sensitivity of null detectors can be considerably increased by using the amplifying circuit shown in the figure. This circuit was found to be particularly useful for in-the-field work. It permitted high-accuracy bridge measurements to be made with a rugged, but relatively insensitive, null-detecting device.

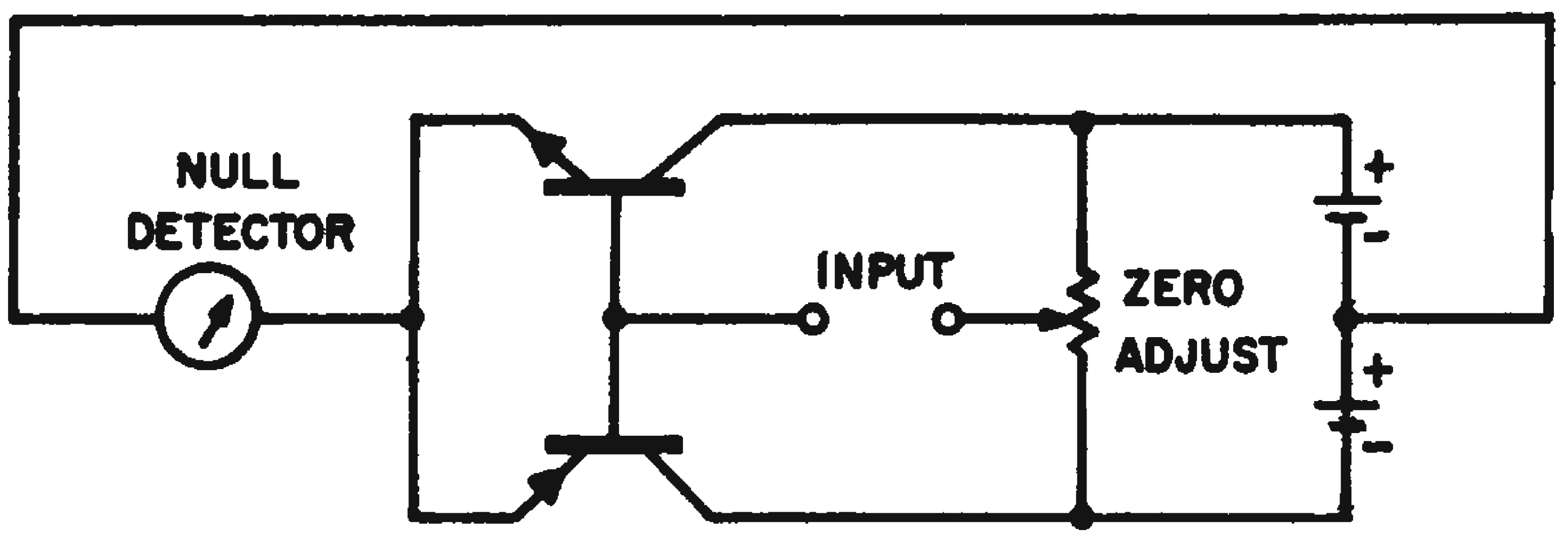

Five-component circuit increases null detector sensitivity, allowing high-accuracy bridge measurement to be made in the field with rugged, relatively insensitive equipment.

Only five components are used in the circuit, including two complementary transistors operated push-pull. A current gain equal to the average beta of the transistors is provided. Voltage gain is unity. The circuit was found to be extremely stable, with drift over a few hours use between 0.02 and 0.10 μa. For more gain, circuits can be cascaded.

The resistance of the potentiometer is not critical. It is used as a zeroing control to center the needle of the null indicator.

Matching of the transistors is not necessary although the circuit is more stable if they are matched. The resistance of the null detector is not critical either. Input impedance of the current multiplier is beta times that of the null device.

Yale Jay Lubkin, Senior Staff Engineer, Loral Electronics Corp., New York, N. Y.

Small Test Probe Uses Hybrid Isolation Amplifier

A small test probe needed an isolation amplifier with high input impedance and unity gain. The amplifier had to have a gain deviation of no more than ±1 per cent over a 25-mc bandwidth, with the gain remaining stable within ±2 per cent over long periods.

The problem was solved by designing a hybrid amplifier combining the high input impedance of a vacuum tube and the low output impedance on a transistor. A nuvistor triode, having the advantages of both small physical size and high input impedance, was used at the input. Thus, the input impedance of the circuit, shown in the figure, is about 1 meg in parallel with 10 pf.

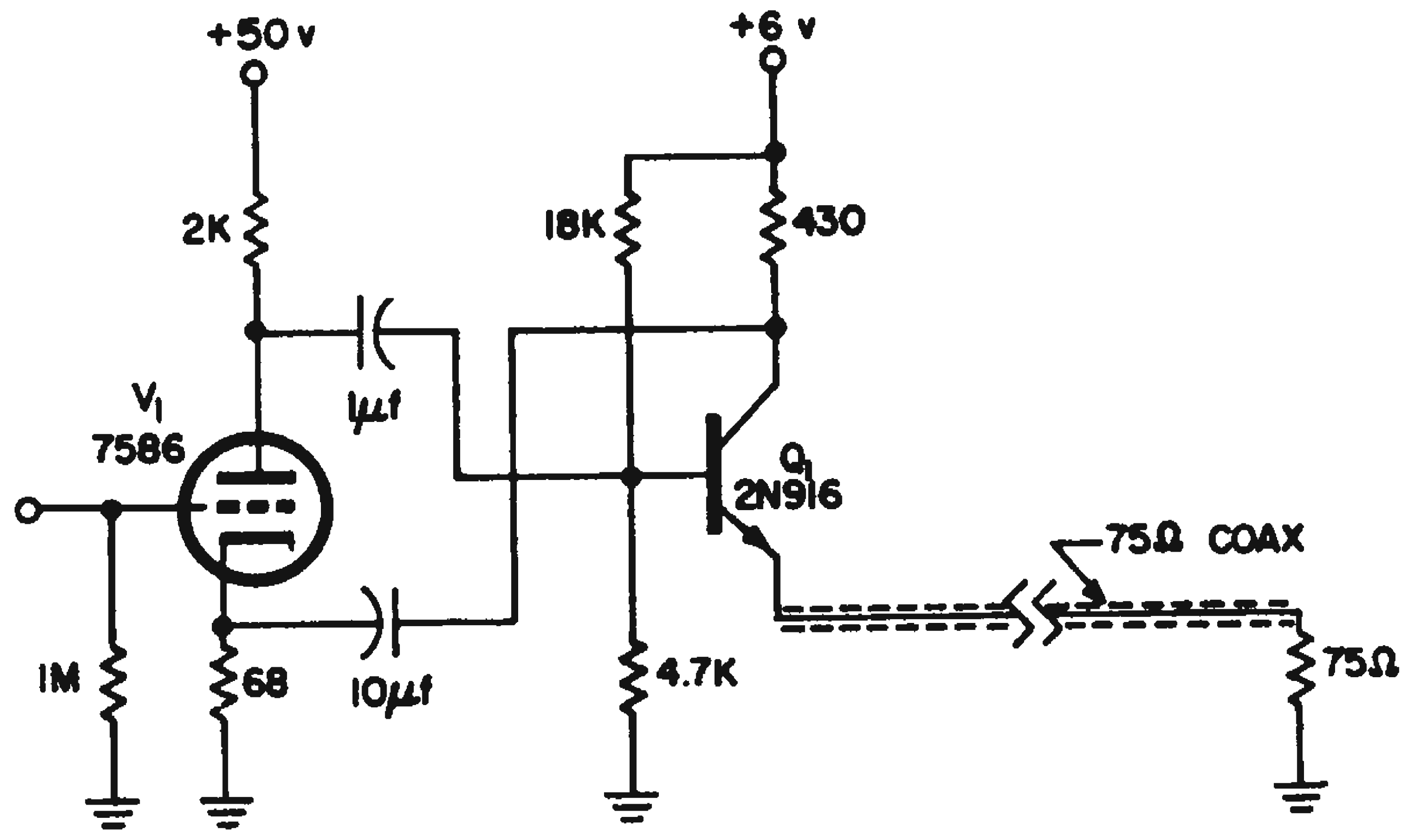

Hybrid isolation amplifier uses nuvistor and transistor to achieve high input impedance, unity gain.

The output at the plate of the monitor, V_1, is coupled to the base of Q_1. The transistor output, taken from the emitter, is then fed through a length of coaxial cable terminated in its characteristic impedance.

High gain stability is achieved by providing negative feedback from the collector of Q_1 to the cathode of V_1. This results in an overall gain of unity. Measurements have shown that the overall voltage gain remained within 1 per cent of its initial value for a 30 per cent reduction in g_m of V_1. The frequency response (1 db down) is 10 cps to 55 mc. The collector supply voltage was also used to operate the filament of V_1. The maximum input level is limited to about 0.2 v which was satisfactory for our application.

Owen B. Laug, Electronic Engineer, National Bureau of Standards, Washington, D. C.

Balanced Magnetic Fields Determine Pulse Amplitudes

In the design of magnetic memory systems it is often necessary to measure accurately the amplitude of current pulses. Recently, Tektronix introduced a probe that clips onto a current-carrying wire and allows the current pulse to be displayed on a scope. The following technique was devised to increase the accuracy of measuring the current-pulse amplitude with this probe.

The wire carrying the unknown pulse is placed in the mouth of the probe and displayed on the scope—I_m in Fig. 1. A second wire, carrying a calibrating current pulse, I_c, is so placed in the probe mouth that its current direction opposes that of the current pulse to be measured. The amplitude of the calibrating current is adjusted until the scope shows a net zero current during the time the "unknown" current pulse is present. This indicates that the amplitudes of the calibrating and the unknown pulses are equal, as shown by the composite waveform of Fig. 1.

By increasing the gain of the scope, the calibrating current pulse can be adjusted very accurately for zero net current during the presence of both pulses. Under these conditions $I_c = I_m$.

A circuit for generating the current calibrating current pulse is shown in Fig. 2. The output circuit is an emitter follower that is normally "off." The current calibrating pulse is generated when Q_1 is turned "on" and saturated. While Q_1 is "on," essentially 10 v is applied to its resistive emitter circuit. By adjusting the trimpot R_1, the current calibrating pulse can be varied from approximately 50 to 100 ma. The amplitude of the current calibrating pulse is measured across the precision resistor R_2 with a precision voltage pulse calibrator. Q_2 is used to switch Q_1.

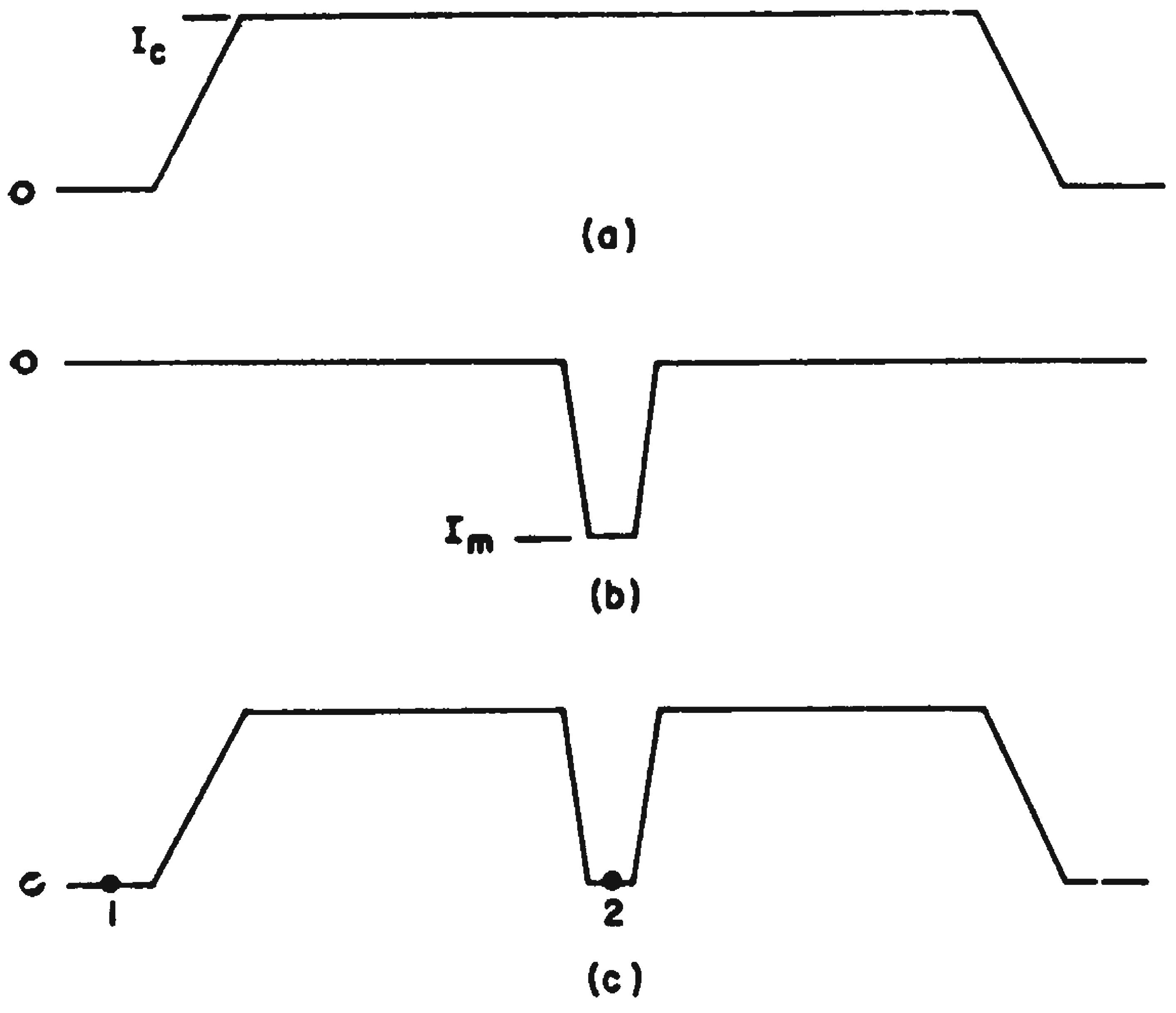

Fig. 1. Current pulse amplitude is measured by balancing magnetic field of known amplitude pulse against the unknown and displaying resulting waveform on scope.

(a) Current pulse to be measured

(b) Calibrating current pulse

(c) Composite current pulse displayed on scope. When points *1* and *2* are aligned, $I_c = I_m$.

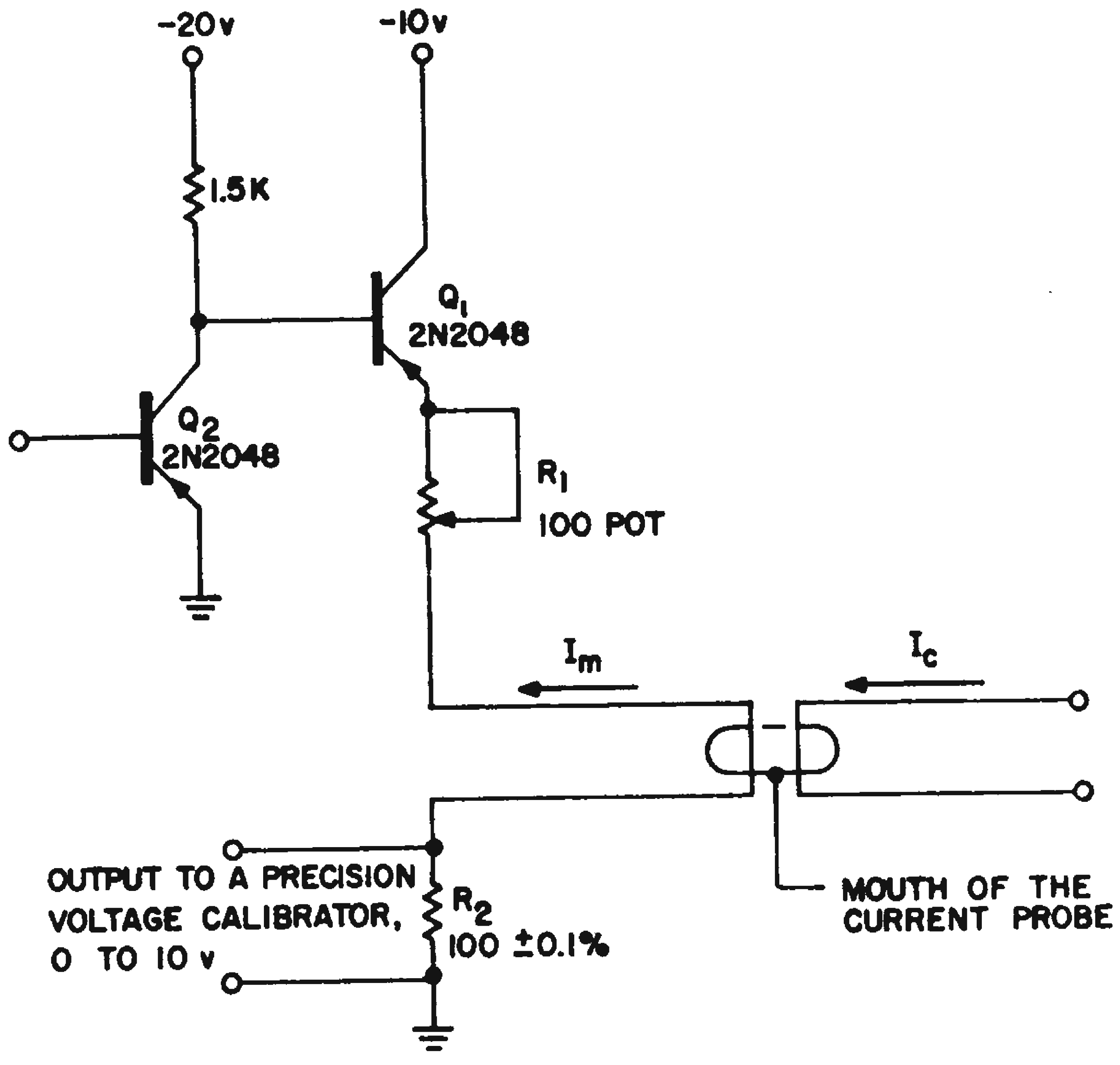

Fig. 2. Circuit for generating the calibrating pulse which is balanced against the unknown in the mouth of the current probe.

The accuracy of this technique depends primarily on how accurately points *1* and *2* in Fig. 1c can be aligned, the tolerance of the precision resistor R_2, and the accuracy of the voltage pulse calibrator. However, it is not unreasonable to measure the amplitude of current pulses with an accuracy of ±1 per cent.

Samuel J. Osler, Jr., Senior Engineer, Philco Computer Div., Willow Grove, Pa.

Low-Cost Scope Attachment Traces Transistor Characteristic Curves

Transistor characteristic curves can be easily traced by using the low-cost oscilloscope attachment shown in Fig. 1. It can be connected to any oscilloscope having calibrated horizontal and vertical sweeps. A 400-cps power supply is required. However, the use of this frequency led to a reduction in circuit complexity and, hence, like reductions in size, weight and cost.

Transistors can be tested only in the common emitter configuration. Other user requirements could be met with additional switching. The 4-pole polarity switch reverses the collector supply, bias current, and meter connections as required for pnp or npn transistors. The collector has a half-wave sinusoidal voltage sweep, set with a variable transformer, which is supplied through an isolation transformer. The transformers are selected with combined ratios that yield a peak output of the maximum desired collector voltage, and with a power rating that will accommodate the largest transistors to be tested.

Base bias current is supplied from a 24-v transformer secondary with a filtered, full wave rectifier. This source is controlled by the dropping resistance of a 3-gang potentiometer. This limits the maximum base bias to 100 ma as read on the panel meter. Three current ranges (0-1, 1-10, 10-100 ma) are selected by a 2-pole switch that also changes the meter shunts. The shunts must be experimentally wound to match the impedance of the 1-ma meter by using a series calibrating meter.

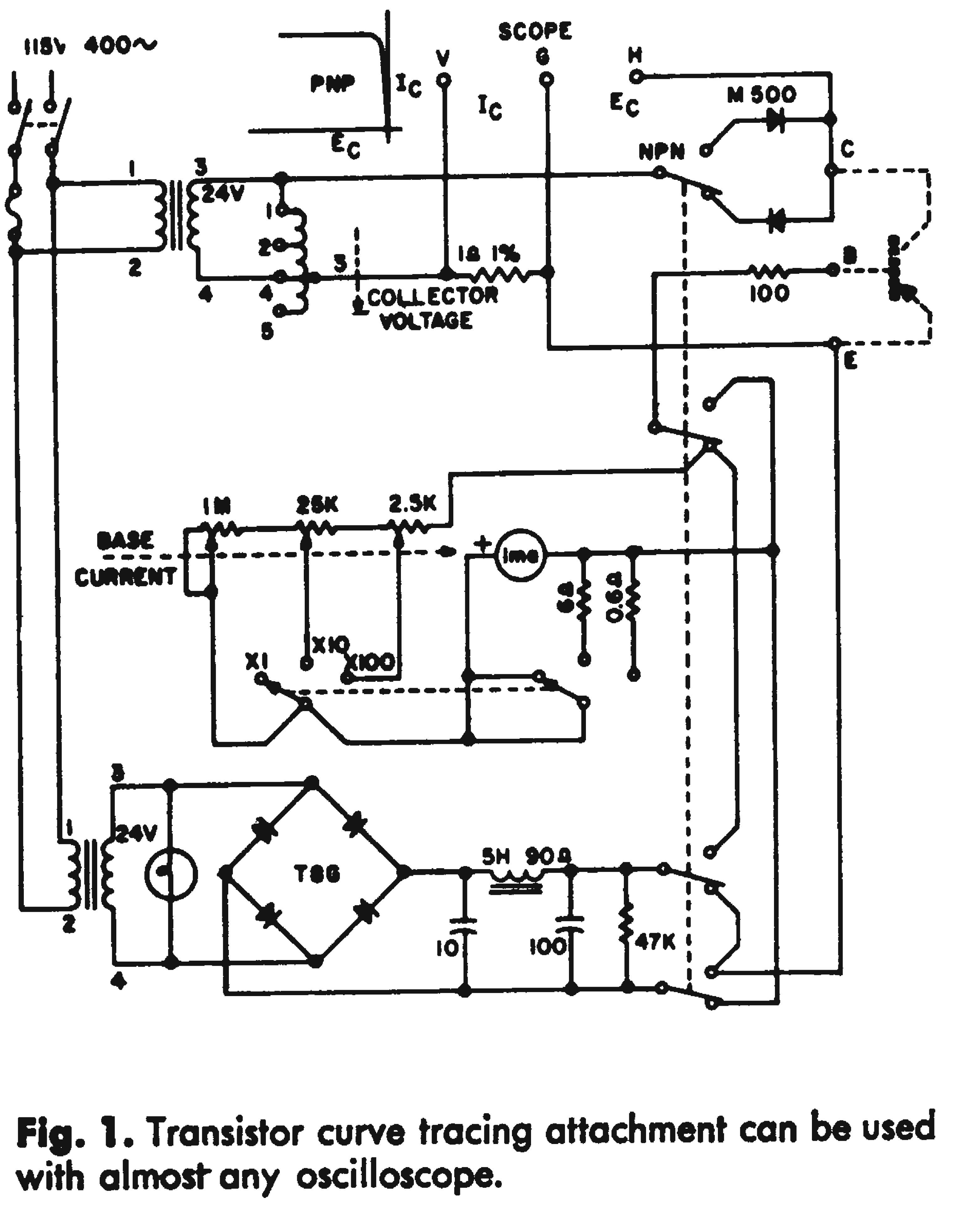

Fig. 1. Transistor curve tracing attachment can be used with almost any oscilloscope.

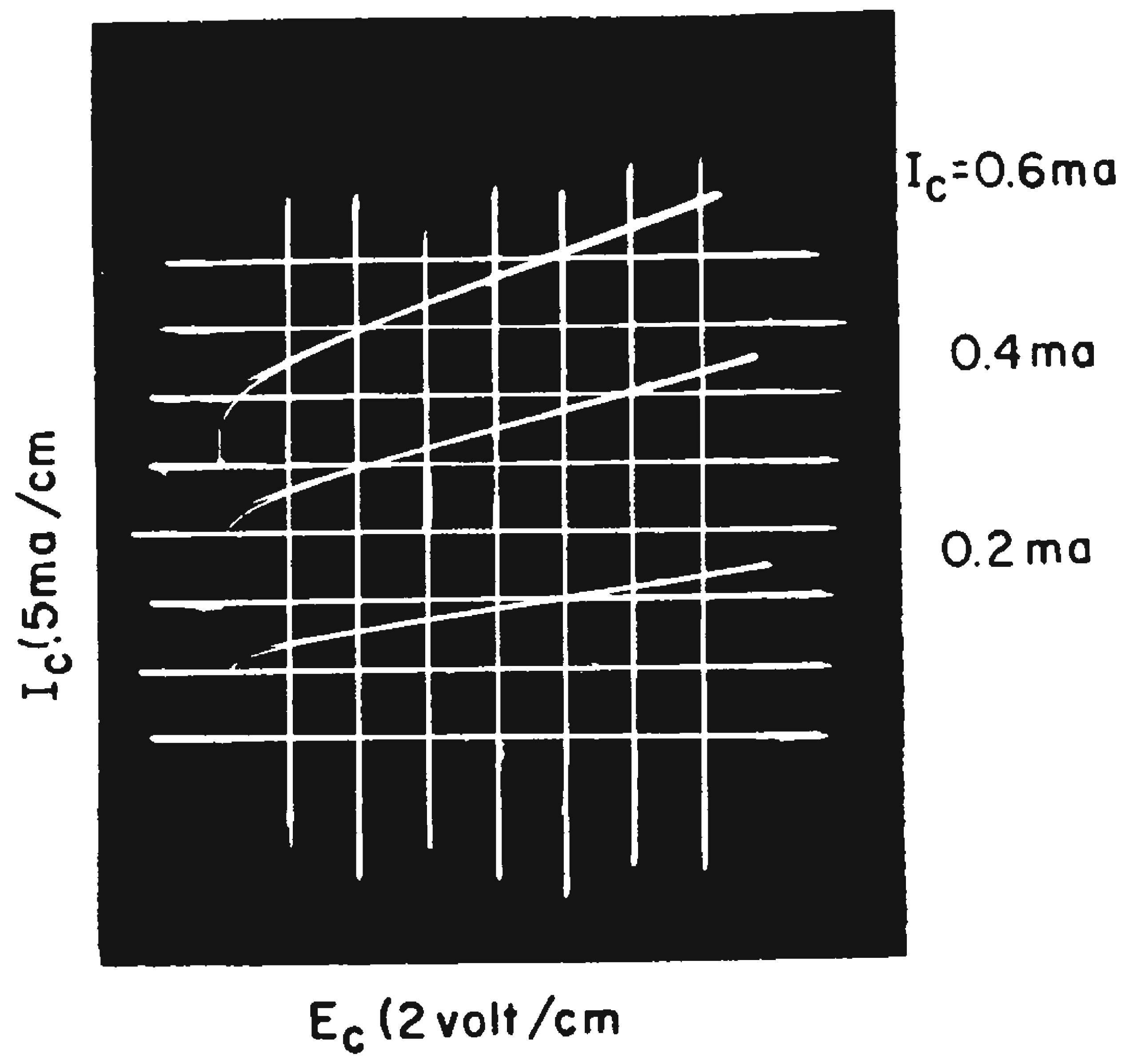

Fig. 2. Characteristic curves for 2N188 pnp transistor are obtained by taking multiple exposure photos for different base current values.

The characteristic curves are presented on an oscilloscope connected to the terminals marked *H* and *V* respectively, and to *G*. A sensitive scope with directly calibrated control knobs (such as a Hewlett-Packard 130A) is particularly convenient for changing scale-factors during the test procedure. The collector current is sampled across a ohm ± 1 per cent shunt, giving a one-to-one correspondence between current and vertical scope deflection. The sinusoidal collector-to-emitter voltage produces the horizontal sweep.

The power is turned on, and the "Collector Voltage" and "Bias Current" controls are turned to the full counterclockwise position. With the polarity switch and "Base Current" switch properly set, the transistor is inserted into the socket, or if more convenient the *C*, *B* and *E* 5-way terminals are used. The characteristic curve will be presented on the scope as a second or fourth quadrant display for pnp or npn transistors respectively. This form of display gives the correct relative sense to the collector voltage deflection while connecting the common emitter to the common ground terminal found on most scope inputs.

Next, the collector voltage is brought up to the desired operating value. The collector current is varied through desired values by adjusting the base bias current. While this is done it is necessary to avoid exceeding transistor ratings. Families of curves are conveniently obtained by resetting the bias control. Multiple exposure photographs can be taken for a permanent record. Shown in Fig. 2 is a family taken for a 2N188 pnp transistor with three different values of bias current.

Chester B. Shapero, Research Engineer, Cupertino, Calif.

Circuit Calibrates Meter For Sine Waves and Noise

White noise and sinusoids of the same effective value read differently on averaging or peak-reading instruments. Some average instruments which are calibrated to read rms values on sine waves, read white noise inaccurately. The circuit of Fig. 1 will read identically for sine waves and noise of the same effective value, and can be calibrated for rms voltages.

The potentiometer P_1 is adjusted until noise and sine waves of the same rms values read the same on the meter. P_2 is then adjusted to give the proper scale value on the meter (1-10 v or 5-50 v). The theory of operation is not given here, but may be had by writing to the author.

Limitations of the method are that it may not read rms of harmonic waves or combinations of a small number of sinusoids. It is also sensitive to the noise bandwidth, when the noise is filtered narrower than, say, 1-kc bandwidth.

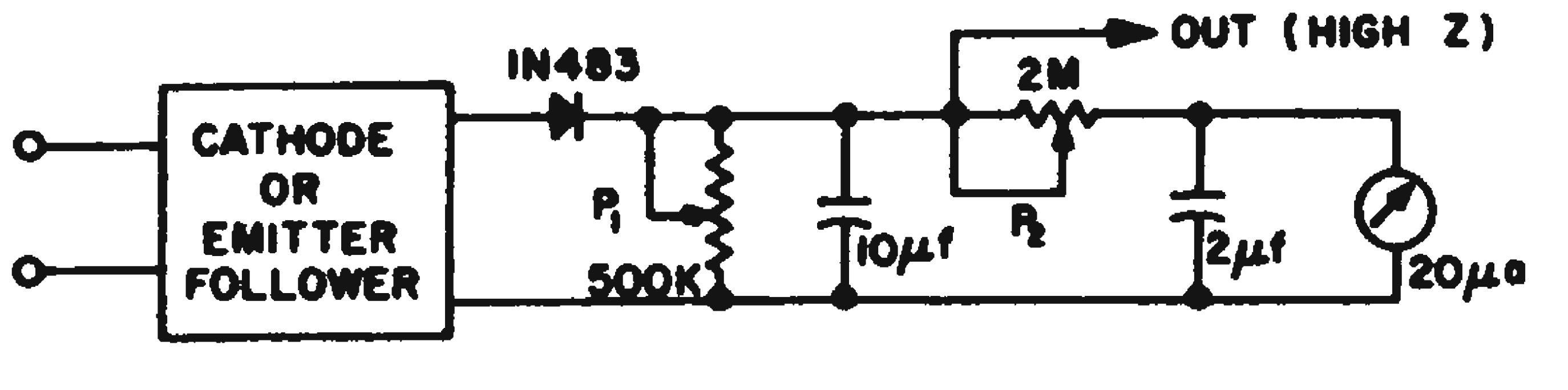

Circuit calibrates meter to read identically for sine waves and noise of the same effective value. Author Davis will send, upon written request, a description of the circuit operation.

The application in which this circuit finds its best use is as a cheap "rms" meter on a spectrum analyzer or bandpass filter. The circuit can be adjusted to read the same for a sine wave and filtered noise of any specific bandwidth. Calibration, noise and combinations of a single sinusoid plus noise may then be measured without computations or adjustments.

A. J. Davis, Research Engineer, Marshall Space Flight Center, Huntsville, Ala.

Ordinary Diode Protects VTVM From Overload

A vacuum tube voltmeter can be protected from the effects of overloads by putting an ordinary diode across its meter terminals.

Although the meter in a standard vtvm is commonly regarded as "burn-out proof," overload conditions can cause the meter current to be 3 to 4 times the full-scale value. Such an overload or surge could result in a bent pointer or even in an open armature coil.

The characteristic curve of a type 1N538 diode has its knee at approximately 0.55 v. Meters in vtvm's usually have a full-scale deflection of 0.18 v. Thus, a 1N538 diode connected directly across the meter terminals will have negligible effect on the meter accuracy. At the same time, it will provide good limiting action when the voltage applied to the meter appreciably exceeds the full-scale value.

In an actual circuit having a 200-μa meter (which required 195 mv for full-scale deflection), the meter current was limited to 250 μa even though the input voltage to the unit was increased to 30 times the full scale reading. Although other special diodes (such as Zeners) could be used, the cost of a common type such as the 1N538 makes it quite attractive for this application.

L. A. Stoll, Sr. Engineer, Electronics & Ordnance Div., AVCO Corp., Richmond, Ind.

Transistor, Relay Switch Safeguard Sensitive Galvanometer

An overload safety device was needed to prevent damage to high frequency galvanometers driven by very low impedance amplifiers. The transistor switching circuit and sensitive fast-acting relay combination shown in the figure was found to be quite reliable.

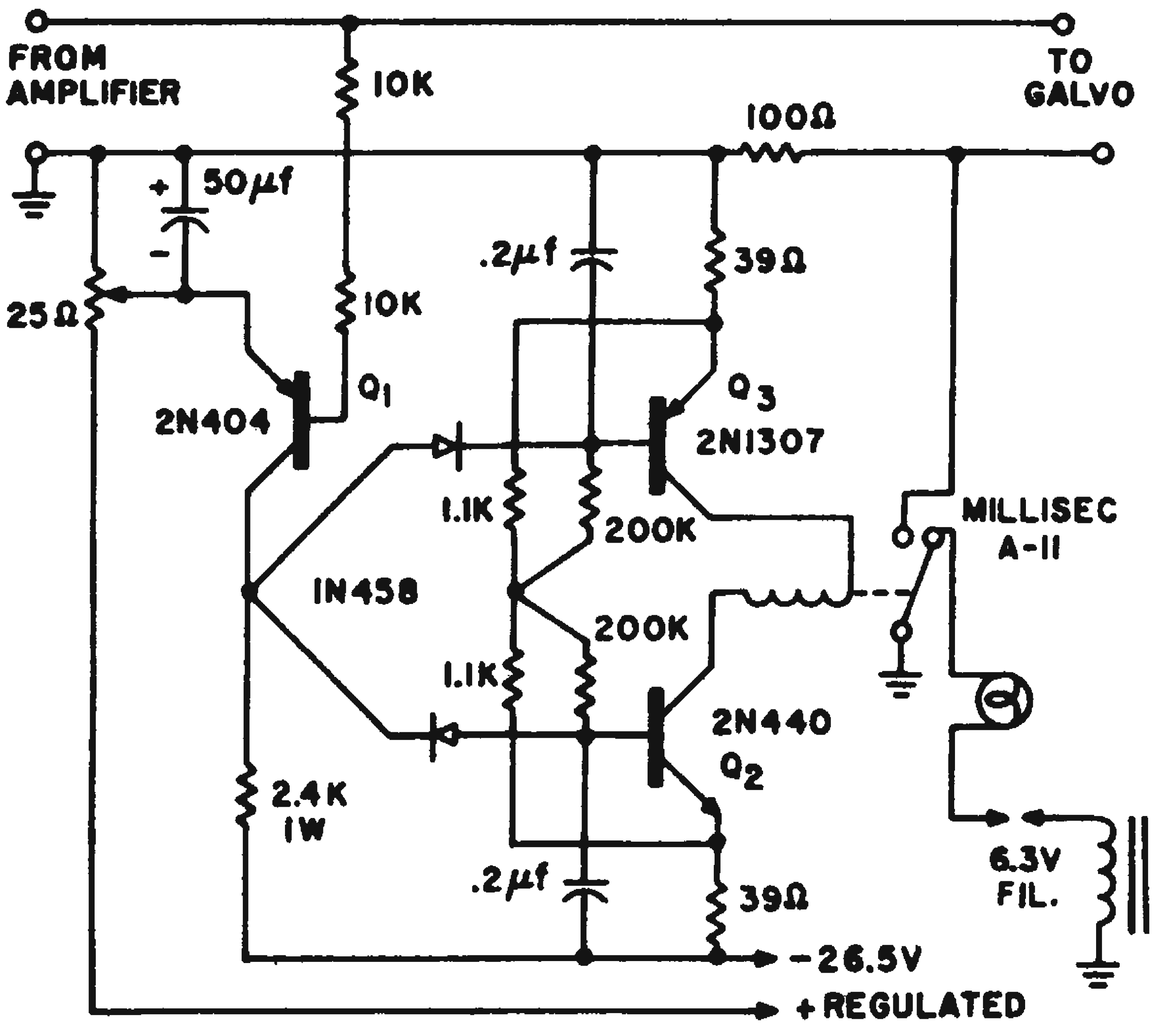

Overload safety circuit protects sensitive galvanometer by switching 100-ohm protective resistor into ground line.

The relay opens on either a positive or negative overvoltage and the cutoff points are equalized by adjusting the emitter bias of Q_1. The 10 K pot in the base circuit of Q_1 provides a sensitivity adjustment.

T. B. Whiteley, Physicist, U. S. Naval Ordnance Laboratory, Corona, Calif.

Modified Detector Adds Markers For Frequency Response Tests

The frequency response of tuned circuits is usually observed on an oscilloscope by using a swept-frequency generator and an am detector. One or more fixed-frequency sources, called markers, help to identify specific frequency points on the response curve.

By slightly modifying the usual detector circuit, two additional markers can be created for each actual one. These are located symetrically on either side of the original marker.

The arrangement is useful for the production alignment or the checking of bandpass circuits. Here, the original marker is set to the desired center frequency and the additional markers indicate the desired 1 db or 3 db bandwidth points.

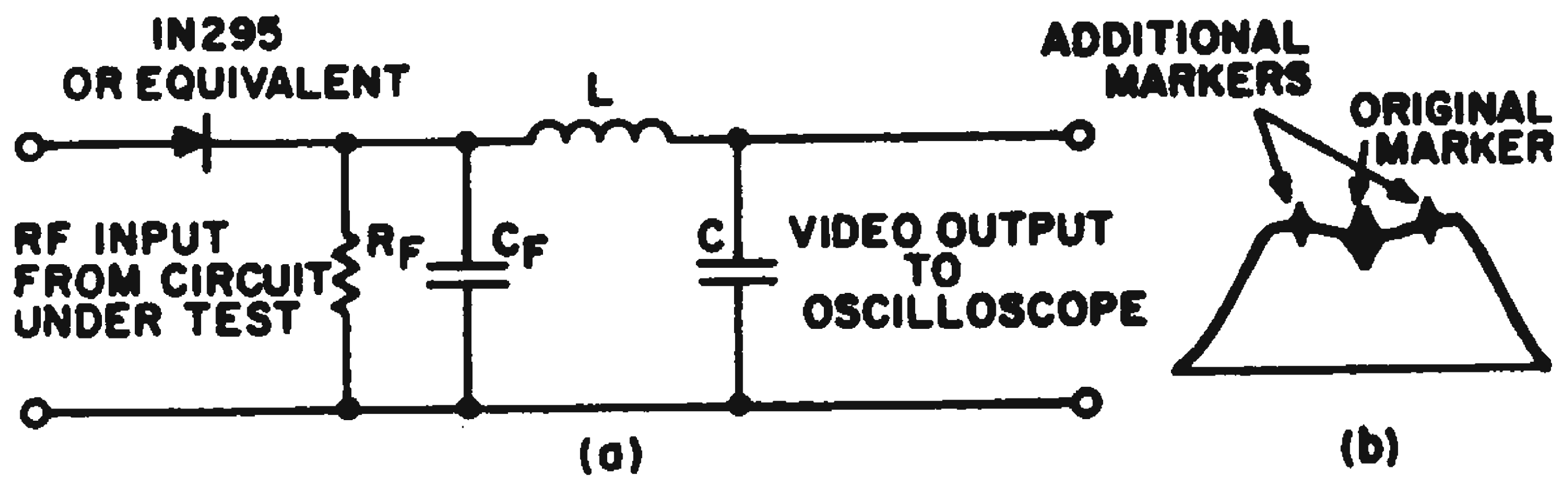

Fig. 1. (a) Detector, modified by LC combination at output, produces additional marker pips for frequency response tests of tuned circuits. (b) Typical oscilloscope pattern circuits such as tuned If or rf amplifiers.

Shown in the figure are the modified detector circuit and a typical frequency response pattern that can be obtained with a single marker source. The detector circuit is conventional except for the series *LC* combination on the output side.

The central "pip" in the response curve is the usual one caused by the swept-frequency zero-beating the marker generator frequency. Beat frequencies significantly higher than zero are normally bypassed by the detector filter capacitor C_F. But, at the frequency for which L is series resonant with C and C_F, there is an enhancement of the beat frequency component in the output. Because of this series resonance, the additional "pips" are created on either side of the zero-beat point. The frequency separation of the side markers from central marker is $1/2\pi LC_T$, where C_T is the series combination of C and C_F. For best results, a high impedance oscilloscope input should be used. However, any capacitance associated with the input simply will be added in parallel with C.

In equipment to be shipped, it has been found useful to connect the modified detector to a test point to aid in-the-field troubleshooting.

John T. Zimmer, staff engineer, Raytheon Co., Wayland, Mass.

Visual Readout for Tester Uses Silicon-Controlled Switch

Stepping relays are frequently used to sequence a series of tests on electronic components such as transistors and diodes. The circuit shown in the diagram will provide a visual indication of which test is being performed and if the test has been passed.

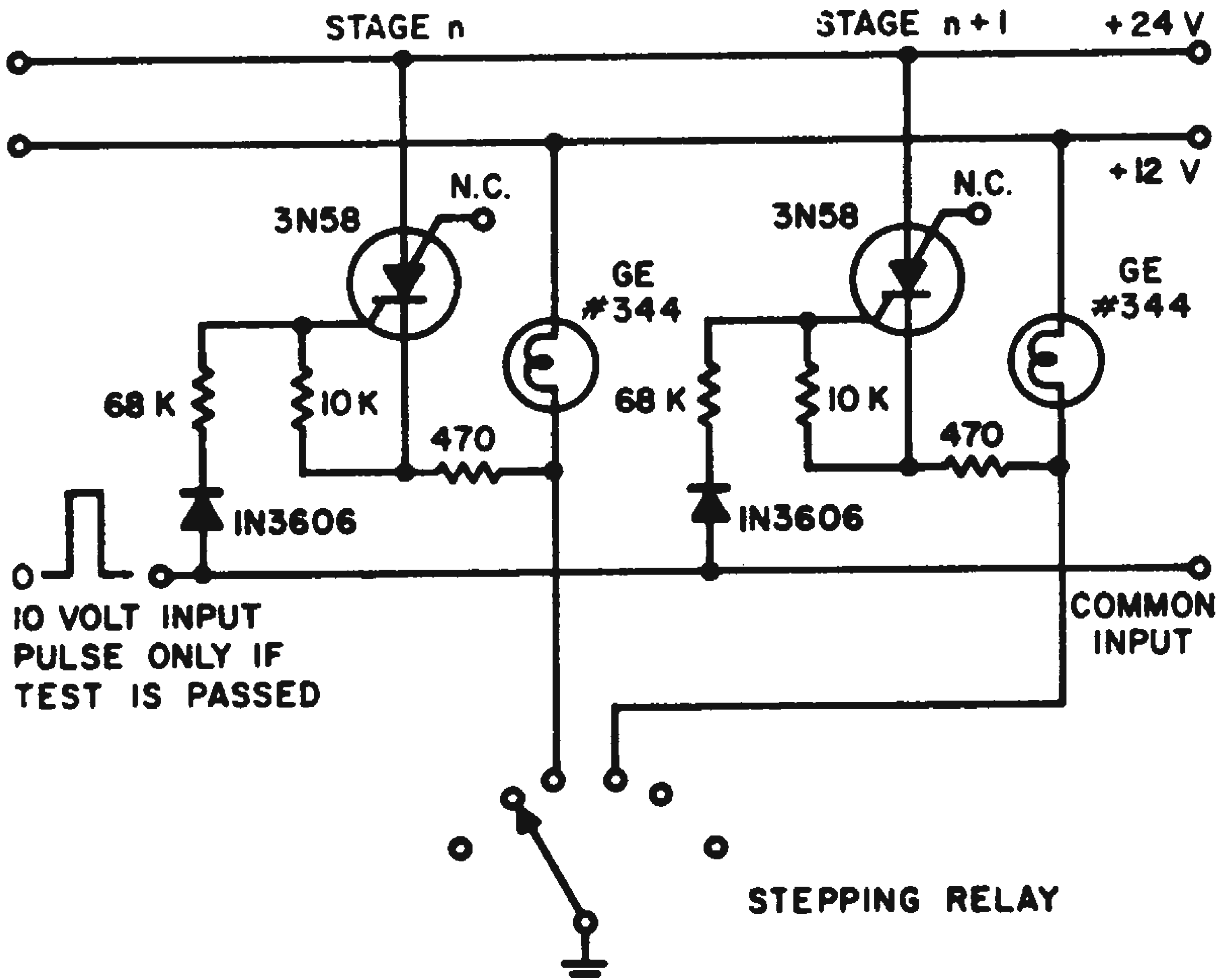

Silicon-controlled switches and lamps indicate those tests in a sequence that have been passed.

The stepping relay position is indicated by a lamp connected from ground to +12 v. If the device passes the test, a 10-v common input pulse turns on only the silicon-controlled switch at the relay location. When the relay sequences to the next location, the grounded terminal of the lamp is returned to +24 v through the silicon-controlled switch and 470-ohm resistor in series. Consequently the lamp remains on at reduced intensity, indicating the test was passed. If the device fails the test, no input pulse occurs and the silicon-controlled switch is not turned on. The lamp will then turn off as the relay sequences to the next position.

If a low-impedance input line is used, the 1N3606 diodes can be eliminated since their purpose is to isolate the line from changes in load.

The lamps are reset by opening the +24-v supply momentarily. If voltage is reapplied too rapidly the lamps may relight. This can be avoided by replacing the type 3N58 silicon-controlled switches with 22-K resistors connected between the anode gate (N.C.) and a 24-v supply which is not interrupted. An alternate solution is to connect a 0.005-μf capacitor across the switches.

Erwin Pacia, General Electric Co., Semiconductor Products Dept., Syracuse, N. Y.

Modified Chopper Drives Zero-Center Meter

By modifying a conventional transistor chopper, we designed a drift-free, triggered-meter, rectifier circuit to drive a zero-center meter movement. The circuit operates from a single-ended source and can pick out very low-level signals from hash and hum levels 100 times as great.

The transistor switches are connected in a modified, bridge-rectifier circuit, whose load is the meter movement. This type of circuit has several inherent advantages over other triggered-meter rectifier circuits.

Since the transistors are used only as on-off devices, and no dc amplification is required at the output, there is essentially no dc drift. Zero adjustment is not needed.

Also, since it is a bridge circuit it operates at high efficiency from a single-ended signal source. This eliminates the need for transformers or phase inverters. The circuit can operate directly from a signal source of at least 5 v rms. And, it can easily be isolated from ground.

The circuit is particularly adaptable to meter amplifier circuitry using current feedback for linearization, since the ac return is completely floating. Designed with the components listed, the largest detectable error was 0.3 per cent of full scale.

The trigger signal need not be a perfect square wave. It should be at least 40 v peak-to-peak and must be isolated from the system ground. In this circuit, the trigger was derived from a 35 v rms transformer winding with a 10-K series resistor and two 20-v Zener diodes back-to-back.

Input impedance of the circuit is approximately 20 K. Input voltage should be approximately 4.4 v rms (in phase with the trigger signal) for full scale deflection.

A balanced dc output voltage for driving recorders or external control circuits is available across the meter terminals.

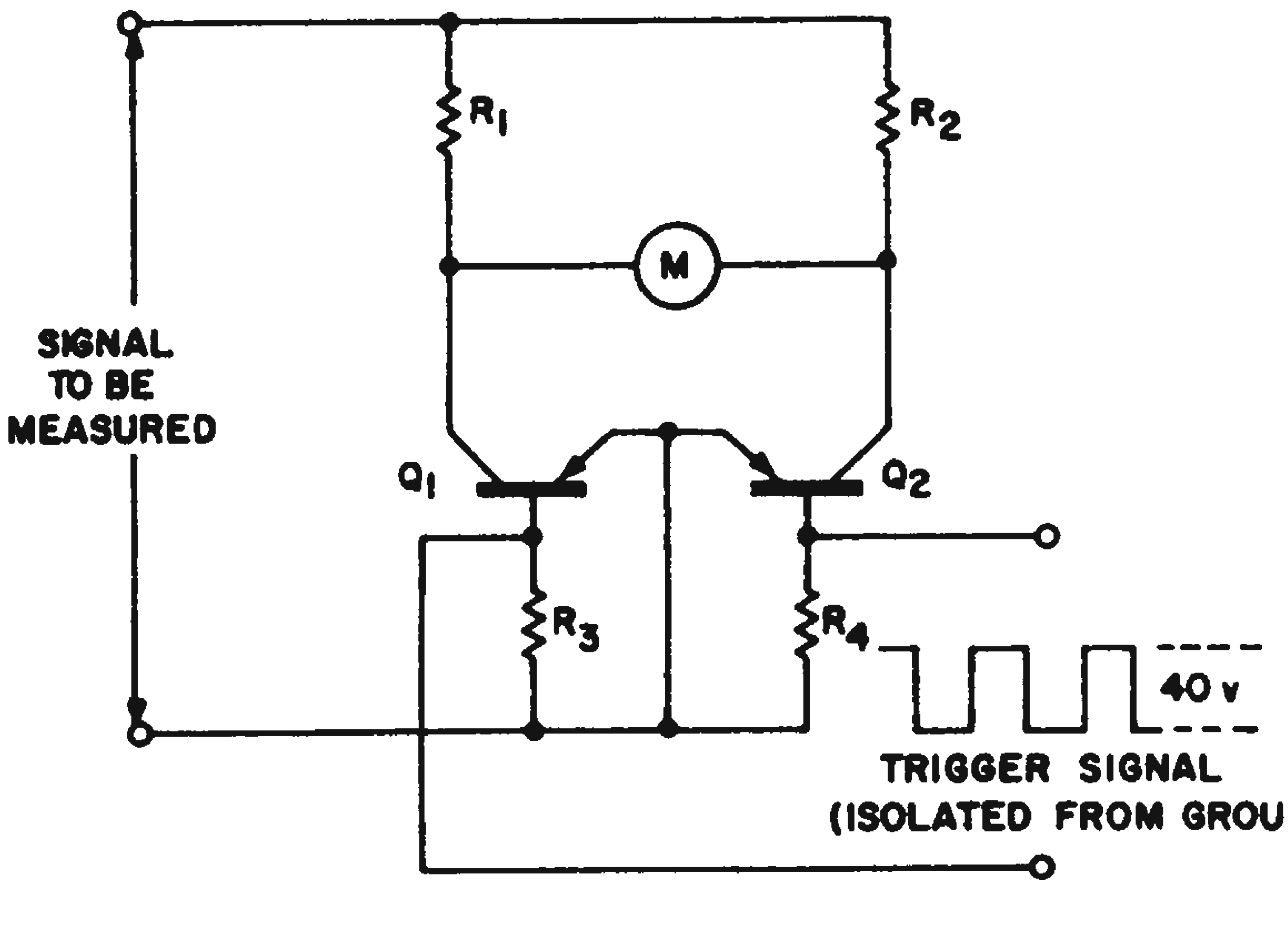

Transistor chopper connected in modified bridge rectifier circuit, drives zero-center meter with essentially no dc drift. Circuit values are:

R_1, R_2 —33 K, 1/2 w, 5%
R_3, R_4 —27 K, 1/2 w, 10%
Q_1, Q_2—2N220 transistors
M—100-0-100 μa, 1,000 Ω, movement

Don Gephart, Staff Engineer, Ohio Semiconductors, Div. of Tecumseh Products Co., Columbus, Ohio.

Simple Null Circuit Has Many Applications

A simple null circuit consisting of a constant current generator and a resistor is a handy tool for a circuit designer. It can be used to cancel out large dc voltage in monitoring a superimposed time-varying voltage. In amplifier circuits, it can be used to extend the low frequency response down to, but not including, dc without using large capacitors. Another application is generation of low-voltage reference levels. The basic circuit (*a*) consists of a constant current generator and a resistor. The output voltage is:

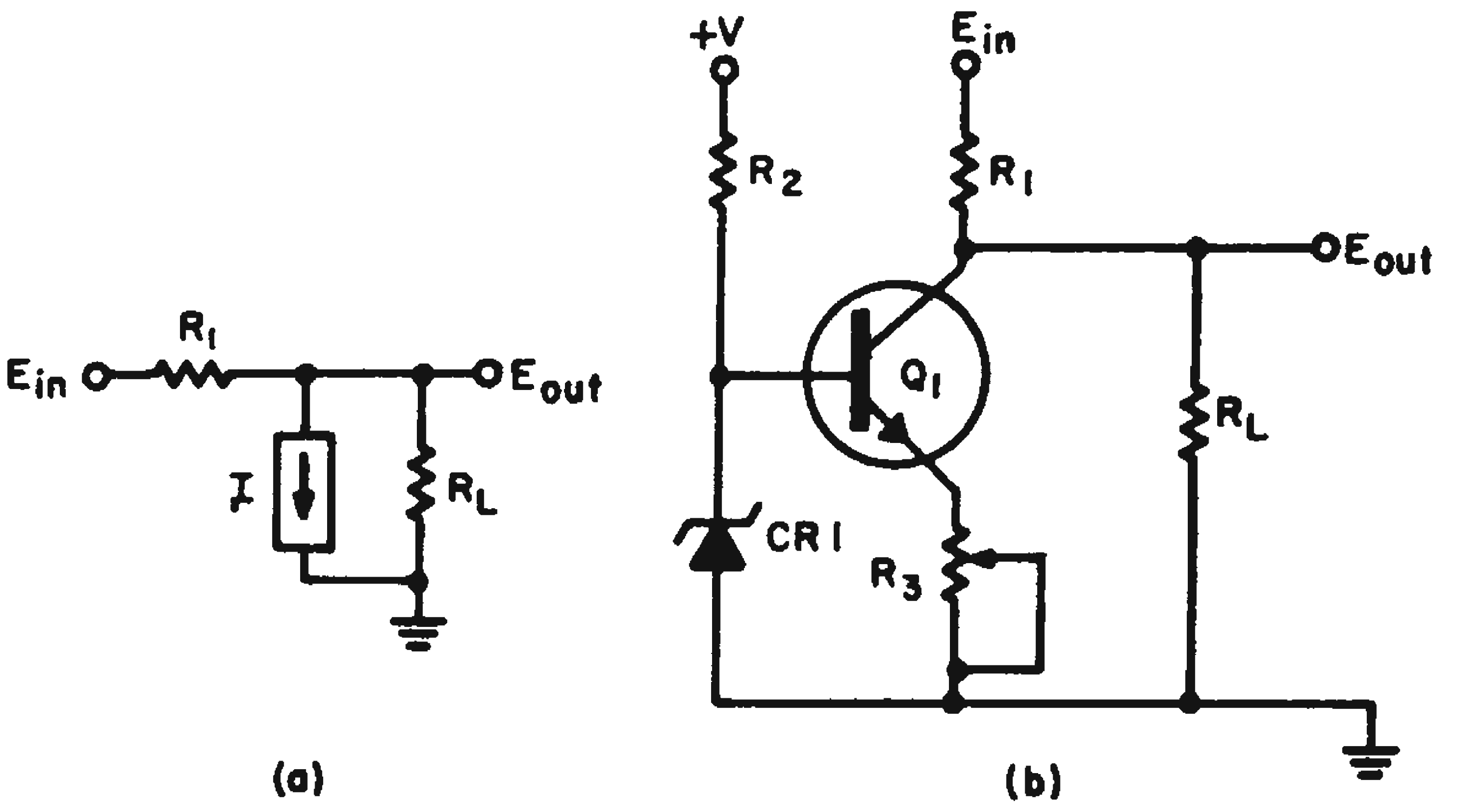

(a) (b)

Basic constant current source and resistor circuit (a) can be developed into simple nulling circuit (b).

$$E_{OUT} = \frac{E_{IN} - I(R_1 + s)}{1 + \dfrac{(R_1 + s)}{R_L}}$$

where s = source resistance. If the source resistance is small compared with R_1, then:

$$E_{OUT} = \frac{E_{IN} - I\,R_1}{1 + \dfrac{R_1}{R_L}}$$

if $R_L \gg R_1$
$E_{OUT} = E_{IN} - I\,R_1$.

The output voltage, therefore, is translated from the input voltage by the amount IR_1.

In the circuit schematic (*b*), current I is varied by adjusting R_3 so that:

$$IR_3 + V_{BE} = V_z$$

where V_z = breakdown voltage of the Zener diode.

It should be noted that the breakdown voltage of the transistor need only be greater than the time-varying voltage and is independent of the dc translation voltage.

Dough McKinley, design engineer, Ling-Temco Vought, Inc., Dallas, Tex.

Testing Field-Effect Devices On Transistor Curve Tracers

Commercially available field-effect transistors (FET) frequently have pinch-off voltages, V_{po}, in excess of the 2.4 v maximum obtainable from the Tektronix type 975 curve tracer.

The illustration shows a simple modification that overcomes this difficulty. An external resistor, R_x, is attached to the base and emitter terminals of the curve tracer (the gate and source terminals, respectively, of the FET). The step-selector is then operated in the current-mode.

Since the output of the current generator appears as an infinite resistance to reasonably small values of external resistance, the voltage per step across R_x is I_bR_x, where I_b is the selected current step.

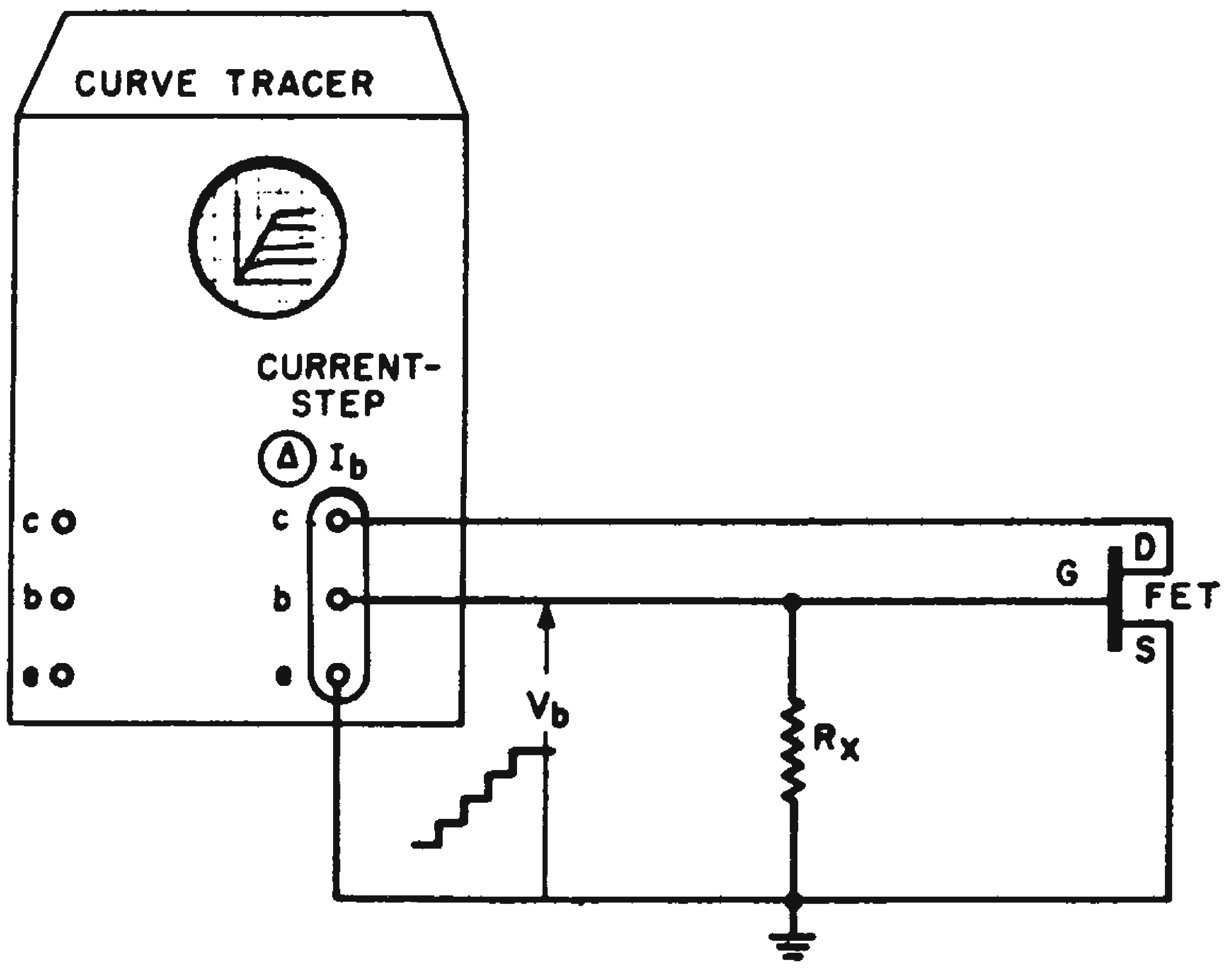

Curve tracer's current-step source is used to obtain FET pinch-off voltages.

The compliance voltage of the current-step generator is about 13 v. Therefore, to avoid non-linearity distortion, the peak output should be limited to values less than about 12 v. ($V_{peak} = hI_b\,R_x$, where h is the total number of steps.)

For example, a compatible setting would be R_x = 1 K, and I_b = 1 Ma/Step, resulting in V_b of 1 v/step and a peak voltage of 12 v. Note that R_x is considerably less than the multi-megohm input impedance level of typical FETs, resulting in negligible loading effects on R_x.

John V. McMillin, project engineer, Measurement Research Center, Inc., Iowa City, Iowa.

Determining Voltage Gain Of Field-Effect Transistors

The drain-source voltage vs drain current characteristic of an FET can be presented on a curve tracer by using a simple technique. A resistor is connected from gate to source (base to emitter on the curve tracer) and appropriate polarity voltages are used for the drain and gate. The external resistor converts the base current steps into voltage steps of known magnitude. Thus, for example, if a 10-K resistor is used and the base current steps are chosen as 50 μa pre step, steps of 1/2 volt will result.

The display thus obtained can be used to determine the voltage gain of the circuit. The end points of each gate-source voltage trace are at the intersection of that trace and the load line $1/R_L$. Thus, by moving along the load line over a given gate-to-source voltage (V_{gs}) range, and projecting vertically to determine the corresponding change in drain-to-source voltage (V_{DS}), the actual voltage gain (μ) can be found as

$$\mu = \frac{V_{DS}}{V_{gs}}$$

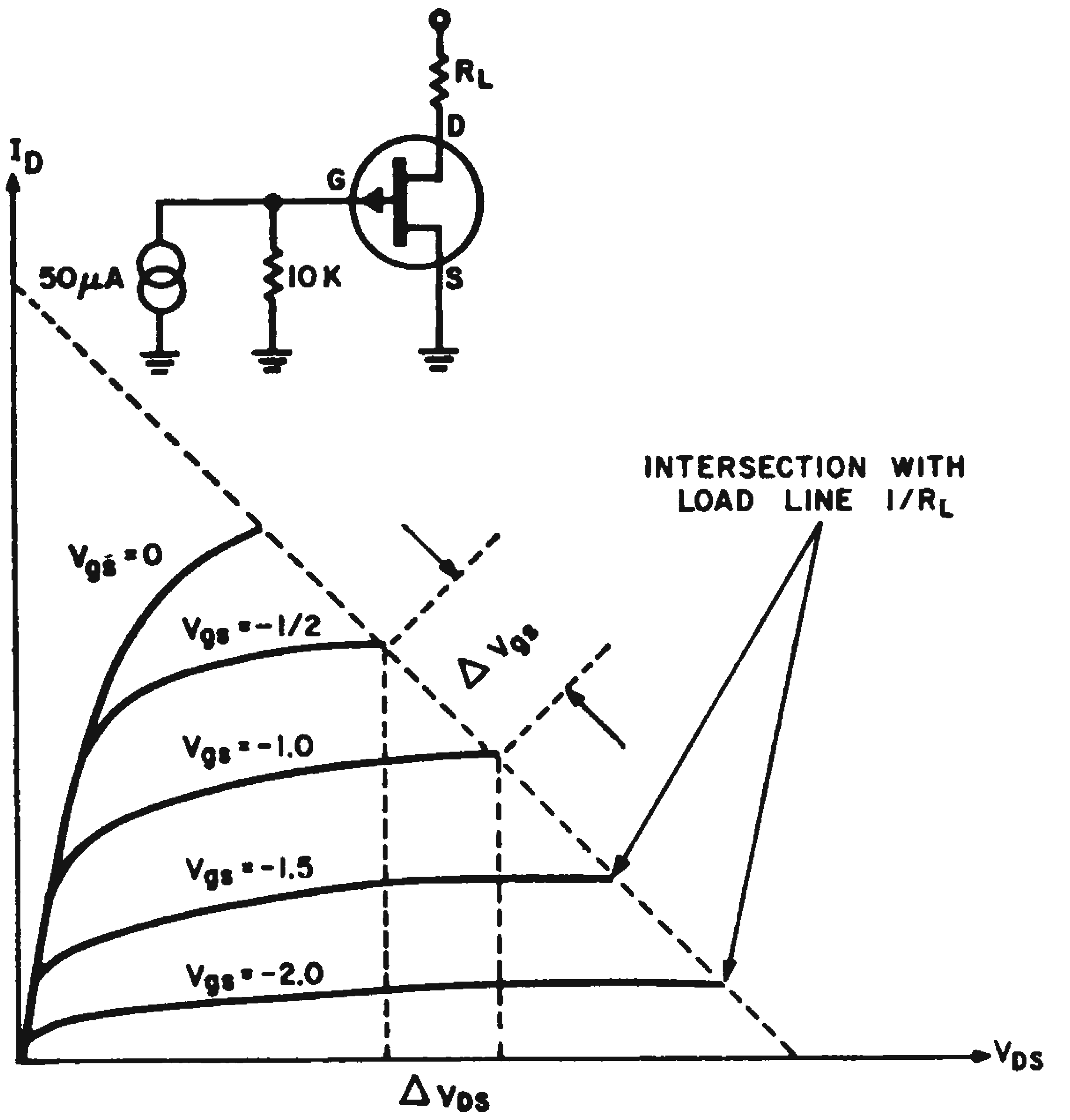

Voltage gain of FET can be determined from characteristic curves obtained using simple circuit.

T. B. Hooker, electronic engineer, General Electric Co., Philadelphia.

Simple Meter Circuit Indicates Transistor Beta

The dc beta of a transistor at a specific value of collector current can be measured with a simple circuit that is in close agreement with measurements made on the Tektronix curve tracer. The circuit was designed to measure beta between 20 and 200 at a collector current of 20 ma.

Transistor Q_1 is the transistor under test, and Q_2 is part of a feedback loop which holds the collector-to-emitter voltage of Q_1 constant at approximately 1 volt. The base-to-emitter junction of Q_2 is forward-biased by the collector voltage of Q_1.

The collector-to-emitter current of Q_2 flows into the base of Q_1 and is indicated on the meter in the collector circuit of Q_2. This base current to Q_1 will cause its collector voltage to drop to a value equal to the sum of both base-to-emitter forward voltage drops. These voltage drops have been assumed to be 0.5 volt each. R_1 is then chosen to provide a drop of 11 volts when the collector current of Q_1 is 20 ma.

When a transistor is plugged into the test socket, its collector current will automatically stabilize at 20 ma. The base current causing this collector current is read on the meter It is necessary only to divide this reading into 20 to obtain the beta of Q_1.

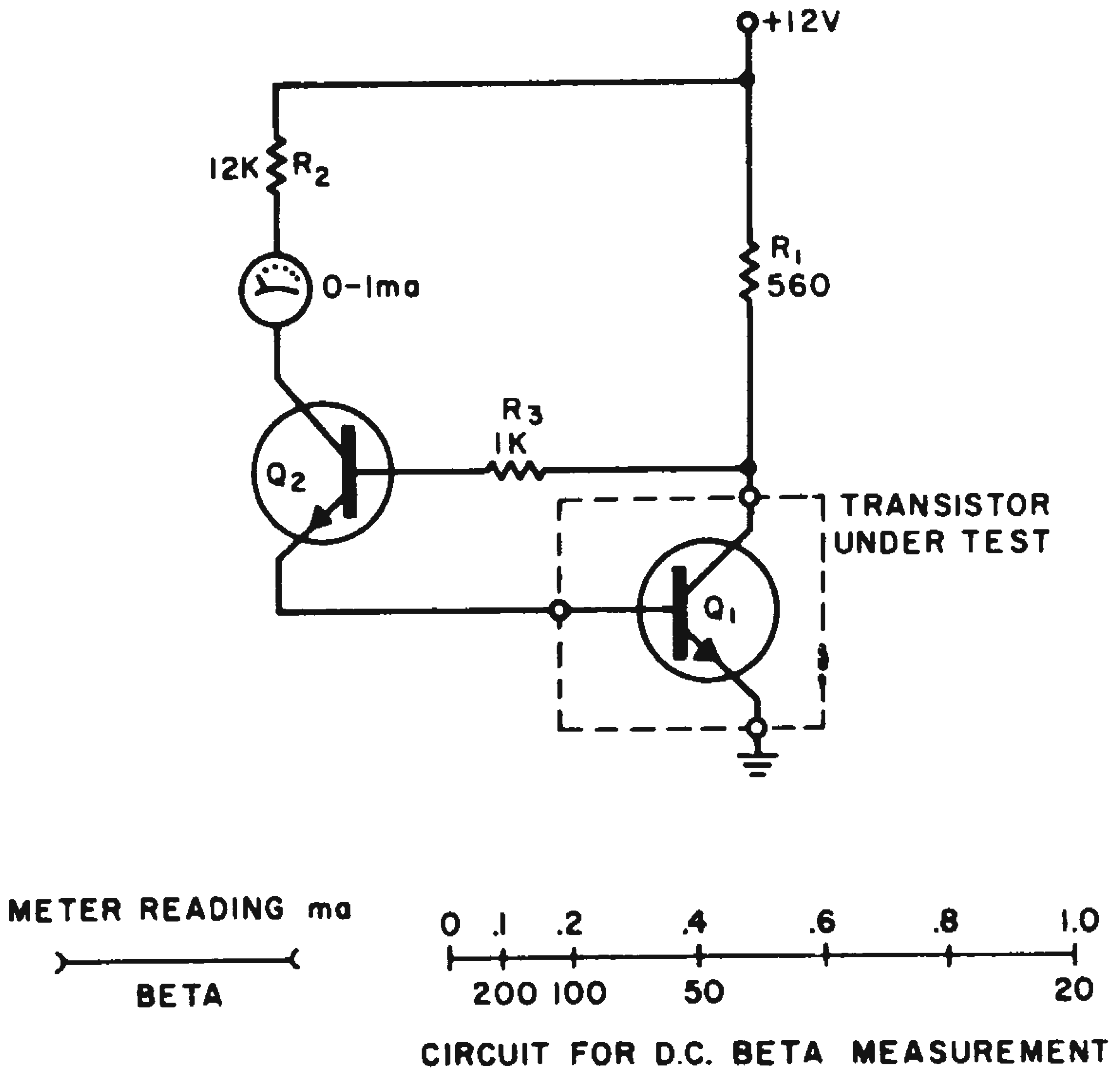

Scale of meter can be inscribed to provide direct reading of transistor beta at 20-ma collector current.

James J. Klinikowski, electronics engineer, Burroughs Corp., Plainfield, N. J.

Amplifier Test Method Uses No External Source

An amplifier operating in the range of 100 mw and up can be tested without the use of an external signal source by letting the amplifier supply its own drive signal. The block diagram illustrates the set-up for a uhf amplifier, but the basic idea can be extended to the audio frequency range.

The ferrite isolator is optional if the step attenuator has low input vswr. However, it was handy when the author made the set-up. One power meter may be switched to the coupler outputs if three are not available. The signal source, an often expensive item, is omitted and little additional equipment is needed to replace it.

The procedure is to set the attenuator for a low value, say 3 db, and then alternately adjust the line stretcher and amplifier tuning until oscillations begin. As the output power increases, the attenuation is increased to maintain the drive at a suitable level.

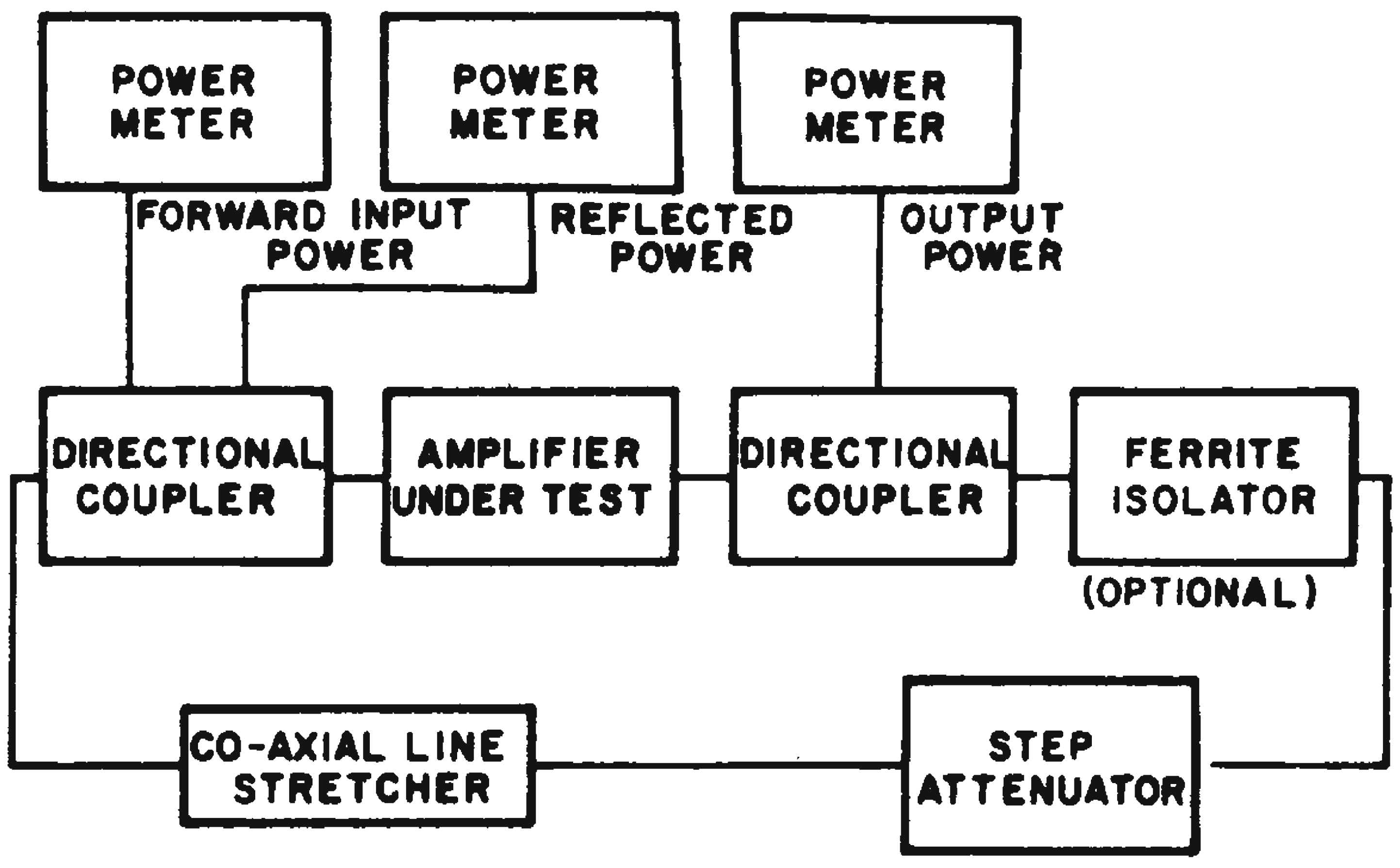

Setup for self-testing amplifier is shown for uhf unit. Technique can also be used at lower frequencies.

The line stretcher is repeatedly adjusted for maximum drive level thus indicating an "in-phase" feedback. The various parameters of the amplifier are adjusted for desired performance.

It can readily be seen that by developing an oscillator circuit, one can determine the optimum performance that would be expected from the design if the feedback had perfect phase and magnitude.

This idea was used only in the 2-Gc frequency range. For lower frequencies, the line stretcher would be replaced by a phase shifter, the ferrite isolator would be omitted and the power measuring equipment would be replaced with voltmeters or in-line wattmeters, depending on the frequency used.

Norman G. Rhinehart, electronic engineer, Microdot, Inc., South Pasadena, Calif.

Sensitive Current Detector Indicates Direction of Flow

Presence of a current above a minimum level, can be detected and indicated by a simple direct-coupled two-stage amplifier. By using diodes as pass devices, the circuit can detect current in either direction. The alternate current paths can be seen by tracing the direction of the arrows of the pass diodes and the emitters of the input transistors. Using circuit values shown, a current of about 10 μa will light up the appropriate lamp.

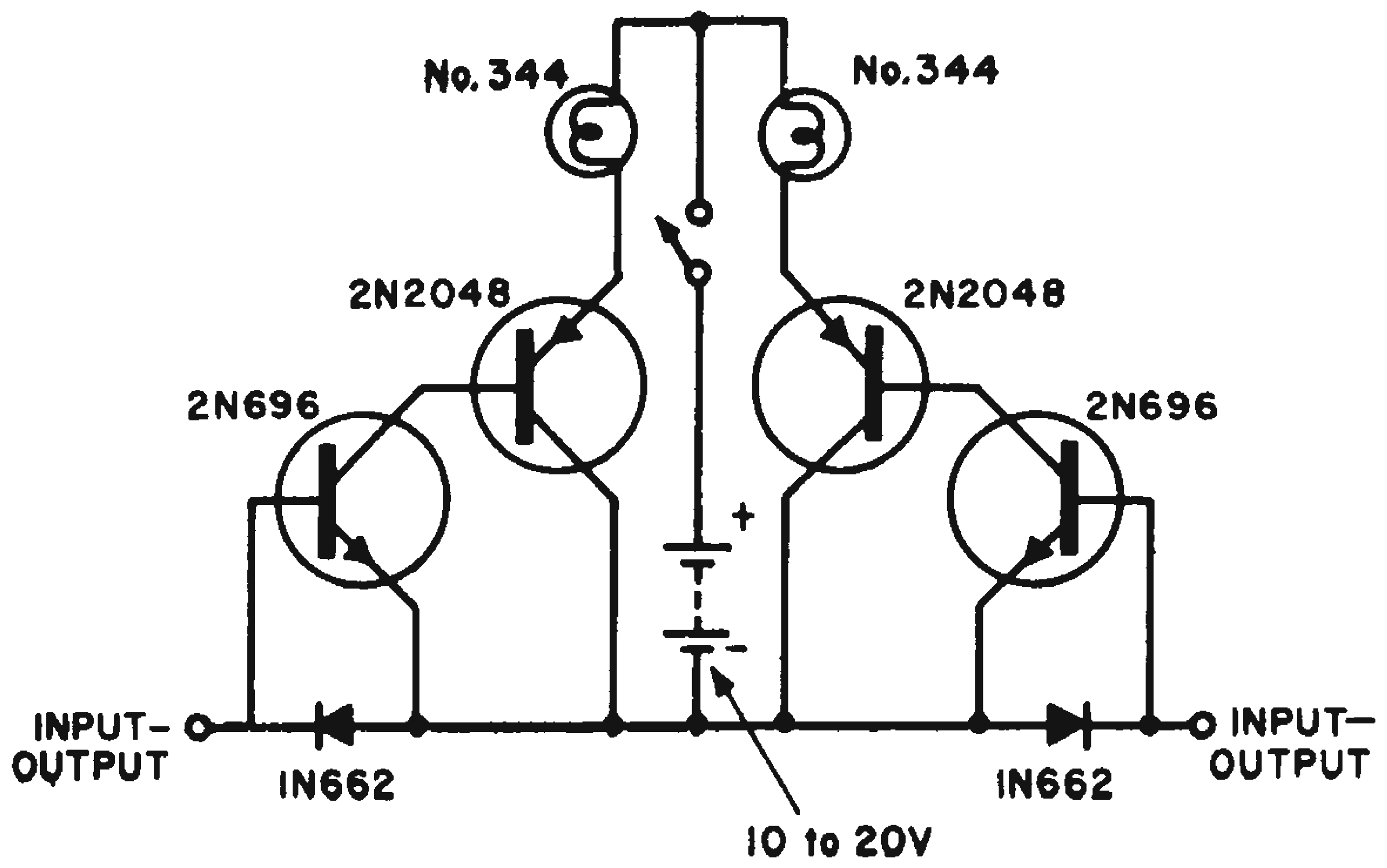

Sensitive current detector uses two lamps to indicate direction. The left-hand lamp indicates a current flow from left-to-right, and the right-hand lamp indicates the opposite flow.

Selection of semiconductors is not critical, but diodes must be of the same material as the input transistors. Considering the circuit as a two-terminal black box, the circuit appears as two junctions in series to a first approximation. Therefore, for currents in the order of 1 μa, the terminal resistance is in the megohm region. At a current of several milliamps, the resistance is less than a thousand ohms.

Richard Gerdes, electronic engineer, Kitt Peak National Observatory, Tucson, Ariz.

Malfunction Indicator Employs Filament Transformer

An inexpensive center-tapped filament transformer permits use of a conventional ac relay for detecting an open-circuit condition in balanced, parallel circuits.

In one specific application, a photographic printer has two banks of exposure lamps which cannot be seen when the unit is operating. Therefore, some lamp failure detection method is necessary. In the circuit shown, no voltage appears across the relay coil in normal lamp operation, since flux is cancelled in the transformer. If any lamp fails, relay K_1 is energized. Contacts on K_1 may turn on a warning light, energize an alarm, shut the machine off or perform other necessary functions.

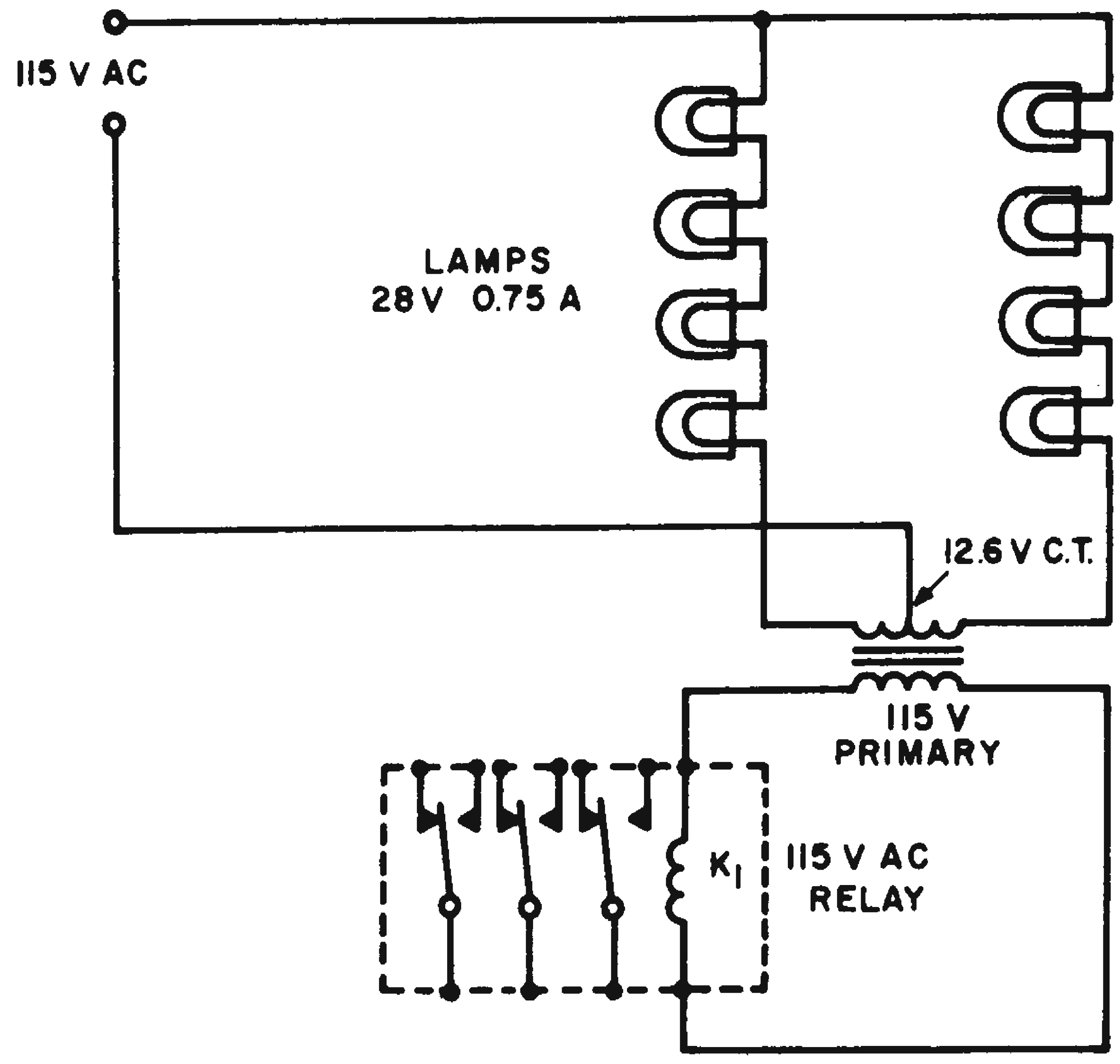

Failure of lamp in either bank will energize relay through unbalanced filament transformer winding.

Andrew Balint, design engineer, Bell and Howell Co., Chicago, Ill.

Microvoltmeter Converts For Differential Measurements

Small variations in dc voltage, such as diode voltage drop with current changes, can be measured with a microvoltmeter having a high input impedance and good long time stability. Only a mercury battery and a 10-turn infinite resolution (film) potentiometer need to be added.

The diagram shows the meter connected in a simple circuit to measure diode voltage-drop variation with current change. Initially the diode current is adjusted to the reference value, I_{DO}, and the drop is read with the meter connected as a VTVM. The meter is then connected to the pot wiper and nulled to establish the zero reference point. I_D is then increased and the incremental voltage read off the meter.

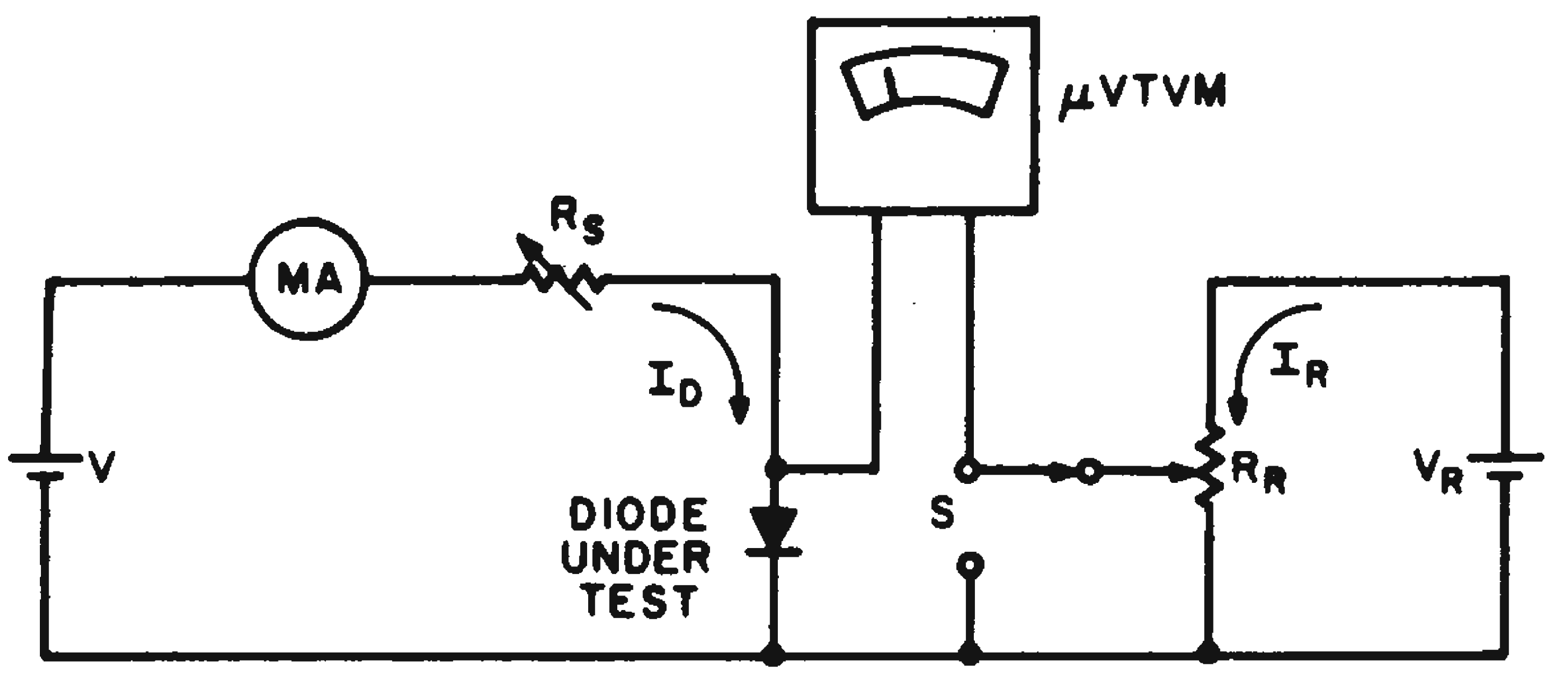

Mercury battery and 10-turn pot convert microvoltmeter for differential measurements.

This arrangement has proved very convenient for plotting characteristics of transistors, diodes, thermistors and other devices.

C. S. Pepper, associate engineer, Scripps Institution of Oceanography, Marine Physical Lab., San Diego, Calif.

Oscilloscope Output Checks Zener Voltage

Unknown or unmarked Zener diodes from the "junk box" can be quickly checked with a Tektronix 531 or equivalent osciloscope having a "sawtooth-output" terminal. Connect a resistor (approximately 220 K) from this terminal to the diode and connect the diode to an oscilloscope-case ground. The sweep waveform will be clipped at the Zener level and may be observed with the same oscilloscope, thus providing a directly calibrated, accurate indication of the breakdown voltage.

V. J. Kanesh, principal engineer, Melpar Inc., Falls Church, Va.

Low-Loss Diodes Reverse Meter Polarity

Automatic meter reversal often is desirable in circuits used to test bath npn and pnp devices. For the current measurement, the circuit shown in (a) has negligible errors at any but extremely low currents. This is due to the extremely low leakage in the diodes shunting the meter. For the voltmeter circuit, in (b), there is somewhat greater error. However, above 5 volts, it is less than 10 per cent. The rectifiers are inexpensive and in many cases they are cheaper than the switching arrangement that would be necessary for reversal. The forward drop of the diodes is low, virtually constant and can be accounted for if considered necessary. The wiring of the meters into the circuit using this method is faster, thereby cutting down labor costs.

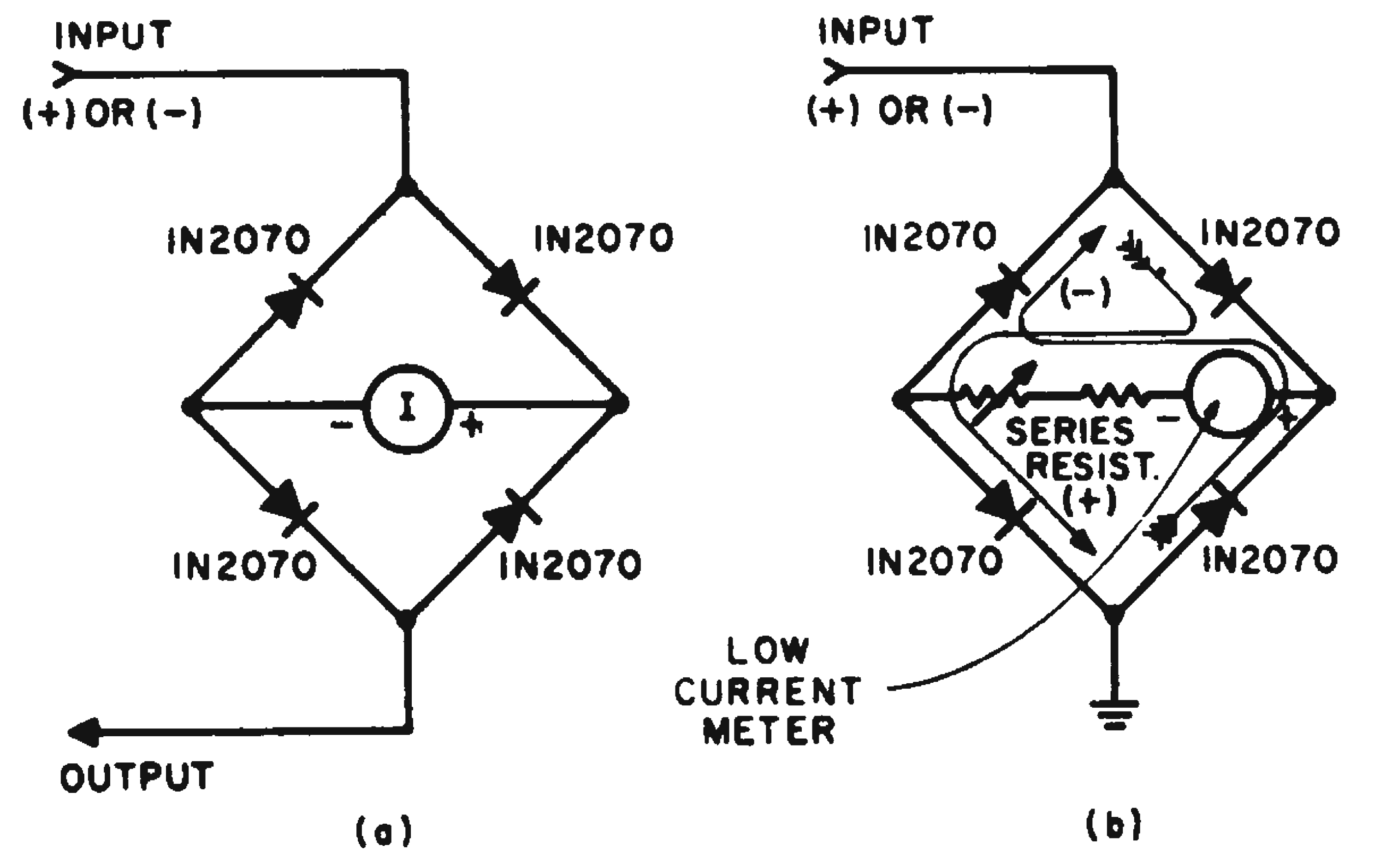

Simple meter reversing circuit uses low-loss silicon rectifiers to reduce meter loading when measuring current (a) or voltage (b).

Ronald M. Mann, engineer, Texas Instruments Inc., Dallas, Tex.

Discontinuity Tester Is Insensitive to Noise

The disadvantages of monitoring contact chatter in the 10-μsec range with conventional thyratron circuits can be eliminated by the use of SCR-controlled circuits. The prime disadvantage of the thyratron circuit is its sensitivity to noise excitation. Because of this, additional tests must be conducted to verify suspected out-of-tolerance conditions.

The SCR circuit is, in effect, insensitive to such noise excitation and is controlled only by an infinite impedance condition occurring over a definite time period.

The circuit to be monitored is placed across the input terminals. As long as no discontinuities exist, capacitor C_1 has a zero charge. An open circuit will permit C_1 to charge towards the +22 volt supply. The charging rate of C_1 is dependent upon the R-C time established by C_1, R_1, and R_2. Thus, the firing of the SCR is time controlled by the charging rate of capacitor C_1. Conduction of the SCR is indicated by lamp L_1. Additional or optional monitoring, such as a recording oscillograph, is available across the output jacks.

Reset push-button S_2 returns the circuit to initial conditions. Precise time calibration of the circuit is obtained from an external timing pulse across the time generator input. The conduction of the SCR is determined by R_1. The circuit shown requires a pulse of at least 20 volts magnitude. The series configuration of CR_1 and CR_2 clamps the potential at the high side of R_2 to approximately 20 volts. Therefore, the capacitor will always see the same potential following calibration. This minimizes time calibration uncertainties.

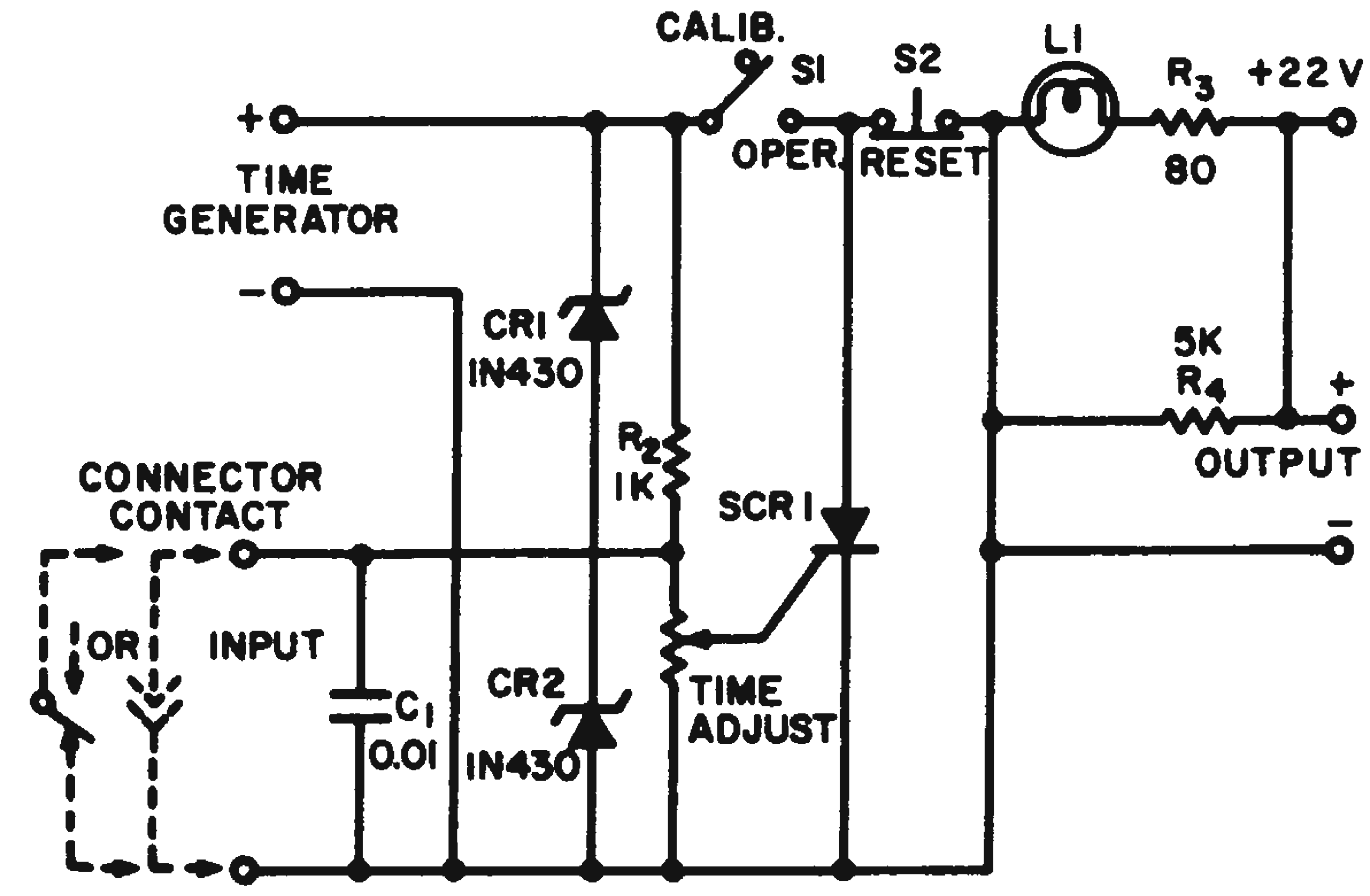

Monitor for chatter or discontinuities triggers on any discontinuity lasting more than 10 μsec.

James A. Ray, senior research engineer, Lockheed Missiles and Space Co., Sunnyvale, Calif.

Transistorized Voltmeter Has 1000 Megohm Impedance

The reverse-bias characteristics of a variable-capacitance diode can be used to design an exceptionally high-impedance dc amplifier. A dc voltmeter design utilizing this principle is shown in the diagram.

Transistor Q_1 is a 10.7-Mc oscillator, using a discriminator primary as the tank coil. The secondary of the discriminator feeds the dc amplifier Q_2, Q_3. A Darlington circuit is used to obtain a good match to the discriminator output with a voltage gain of about 100. The output is fed back to the oscillator tank circuit through the variable-capacitance diode and a 500-pf capacitor. The tank side of the diode is referenced to ground through the attenuator network.

The test voltage through the attenuator sees the variable-capacitance diode as a reverse-bias diode with a resistance of 10^{13} ohms. The power gain without attenuation would be the impedance transfer ratio, since the voltage gain is unity. This gives approximately 84 db of gain with a 30-K output load. Since all the amplifier gain is used as feedback, the circuit is very stable.

A bridge circuit, Q_4, is used for zeroing the meter. With the input probe shorted, the discriminator should be tuned to give a 4-volt V_{ce} at Q_3. The potentiometer is then adjusted to zero at the meter. The 20-K potentiometer in series with the meter is used for calibration.

A 1N759 Zener diode was used as the variable-capacitance diode. Below its Zener level the leakage is very low. Preselected units at leakages of 10^{-13} amps at 6 volts are available.

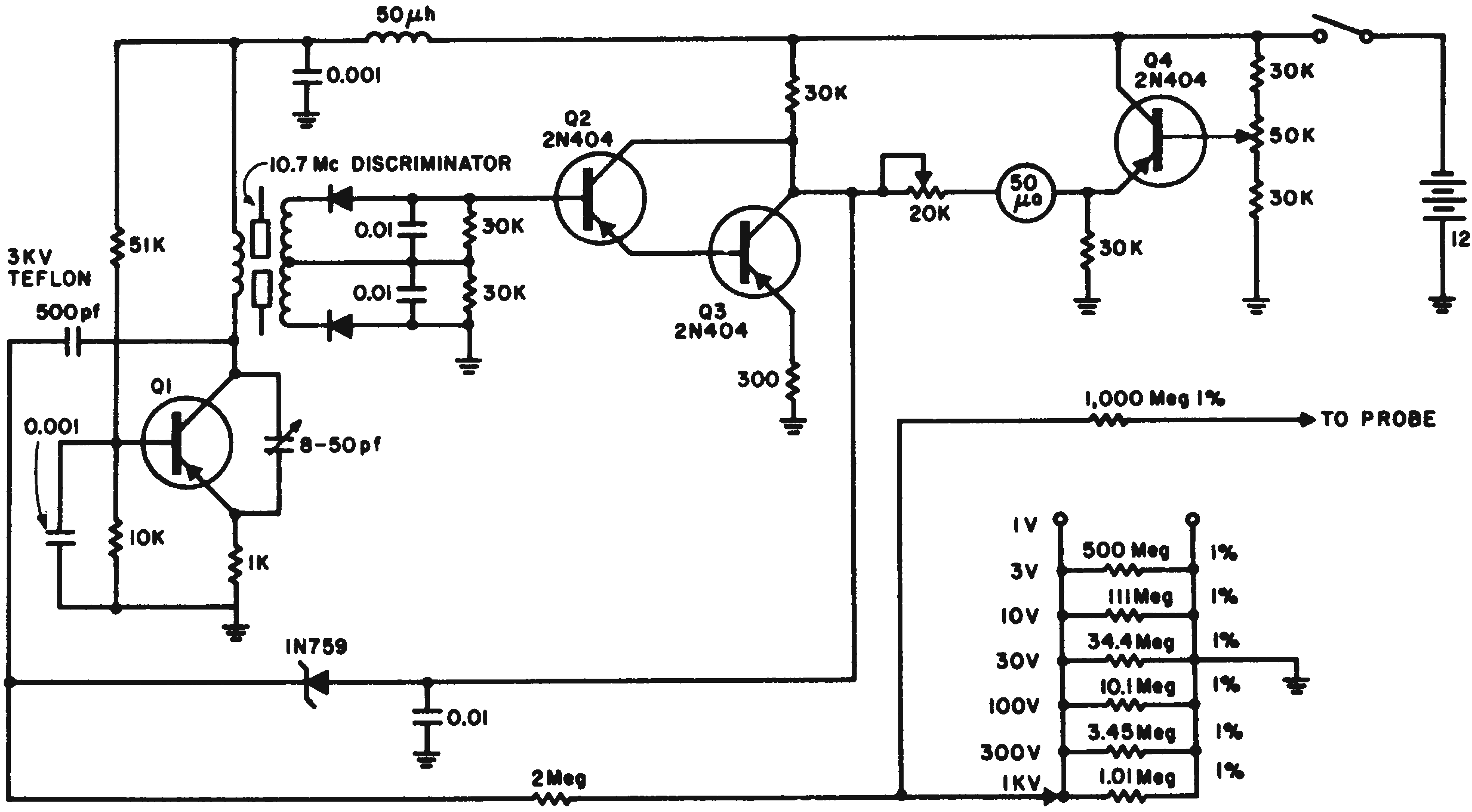

Dc voltmeter uses a Zener diode to obtain high input impedance.

The voltage across the variable-capacitance diode is the voltage from the collector of Q_3 to ground. When a voltage is applied to the attenuator network, it appears across the variable-capacitance diode and shifts the frequency of the oscillator. The output of T_3 will change in a direction tending to cancel out the input voltage.

This circuit has been used in nanoamp meters, voltmeters, audio oscillators and amplifiers.

Herbert Cohen, consultant, New York City.

Simple Series Regulator Gives Binary-Analog Conversion

The problem of recording the order of four switch closures on a single tape-recorder channel can be solved by using SCRs to eliminate contact bounce and to obtain an analog output providing switch identification.

This circuit is basically a series regulator. Each SCR, fired by a designated switch, supplies a preset current to a load resistor in the collector of transistor Q_1. One advantage of this circuit is the small loading effect at point *A*, since the transistor tends to keep this voltage constant. The currents in the SCR circuits are adjusted for a 1, 2, 4, 8 ratio so that only one discrete analog output is represented by a particular switch combination. The SCR I_h determines the minimum current for a regenerative condition, therefore the current representing switch *1* must be larger than this value. In this case 20 ma was chosen. Succeeding switches are represented by 40, 80 and 160 ma respectively. R_1 was chosen so that an output of 1.5 v represented all switches closed or a count of 1111. The rise time is good and the output is within 0.5 per cent of the predetermined values.

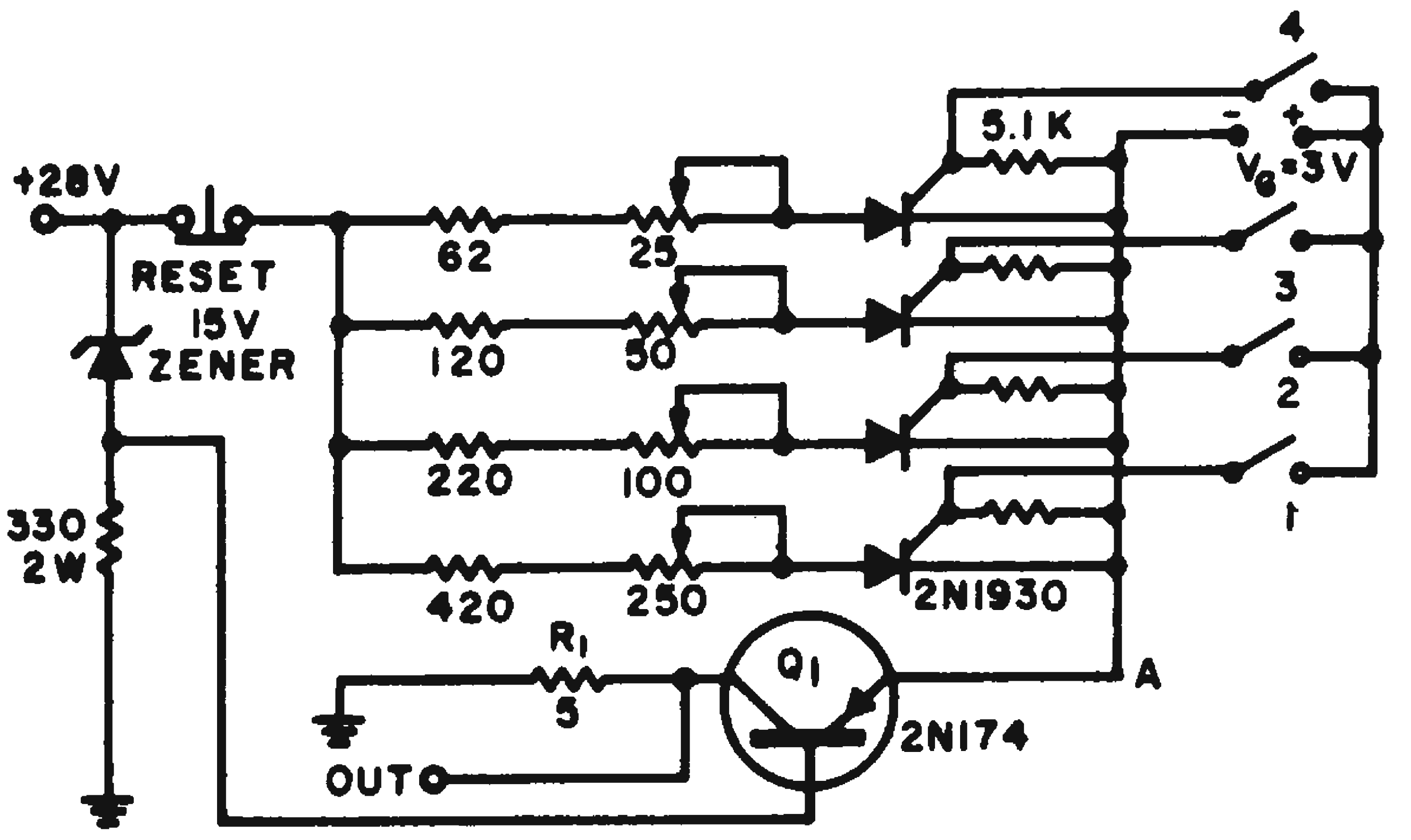

Fig. 1. Closure of switches fires SCRs to give analog voltage output to recorder.

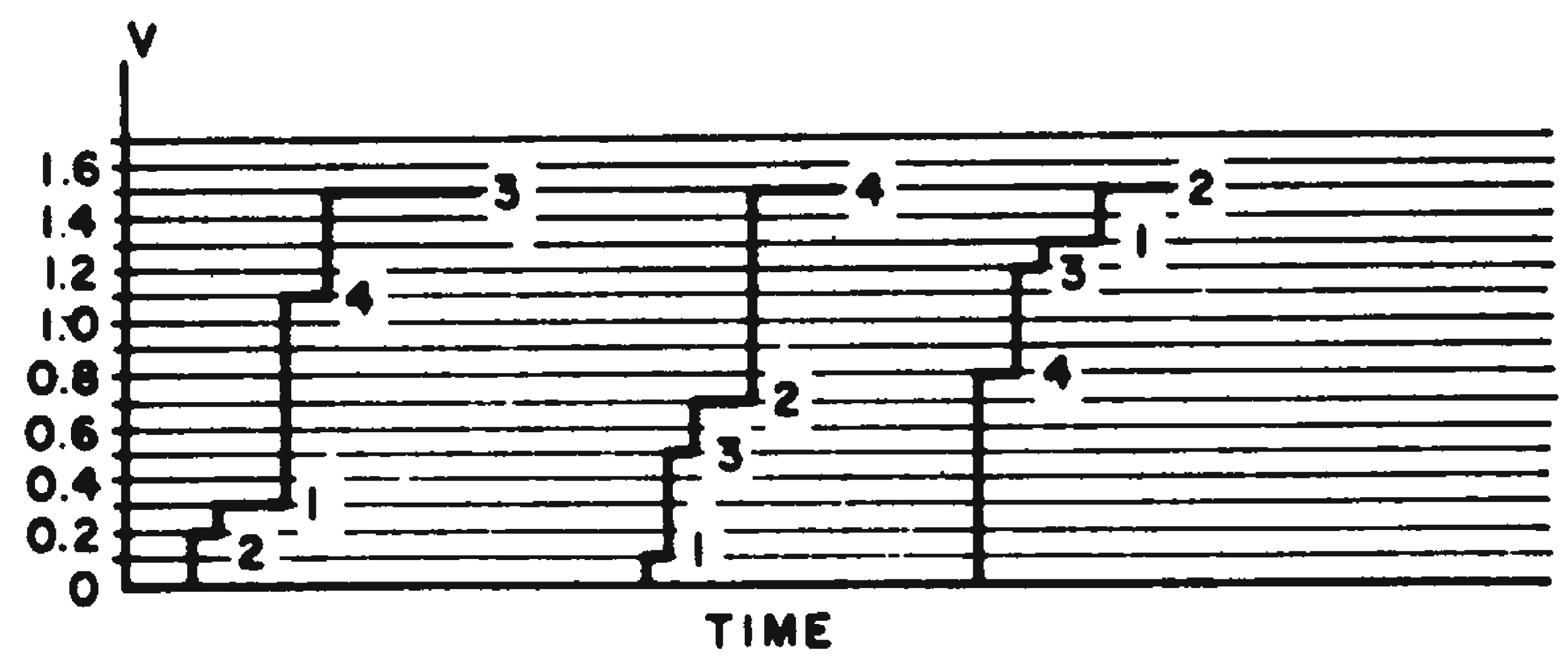

Fig. 2. Three examples of switch closure recording with switch numbers indicated.

This basic circuit can be used for a binary-analog converter if the SCRs are replaced by switching transistors and the circuit component values changed to decrease power requirements.

H. R. Hampton, instrumentation engineer, Grumman Aircraft Engineering Co., Bethpage, N. Y.

Testing Unijunction Units On Transistor Curve Tracers

When a unijunction transistor is properly biased, its negative resistance region can be displayed on a transistor curve tracer as a portion of the emitter *V-I* curve.

To perform the test, positive sweep voltage must be applied to the emitter, and base No. 2 must be made positive with respect to base No. 1. An external dc potential can be used for the interbase voltage. After the desired bias voltage is obtained, the sweep voltage can be applied to the emitter and adjusted as required.

Among the parameters that can be read from the *V-I* trace are peak-point emitter voltage and current, valley voltage and current, and emitter saturation voltage. The intrinsic stand-off ratio, ν, can be determined from:

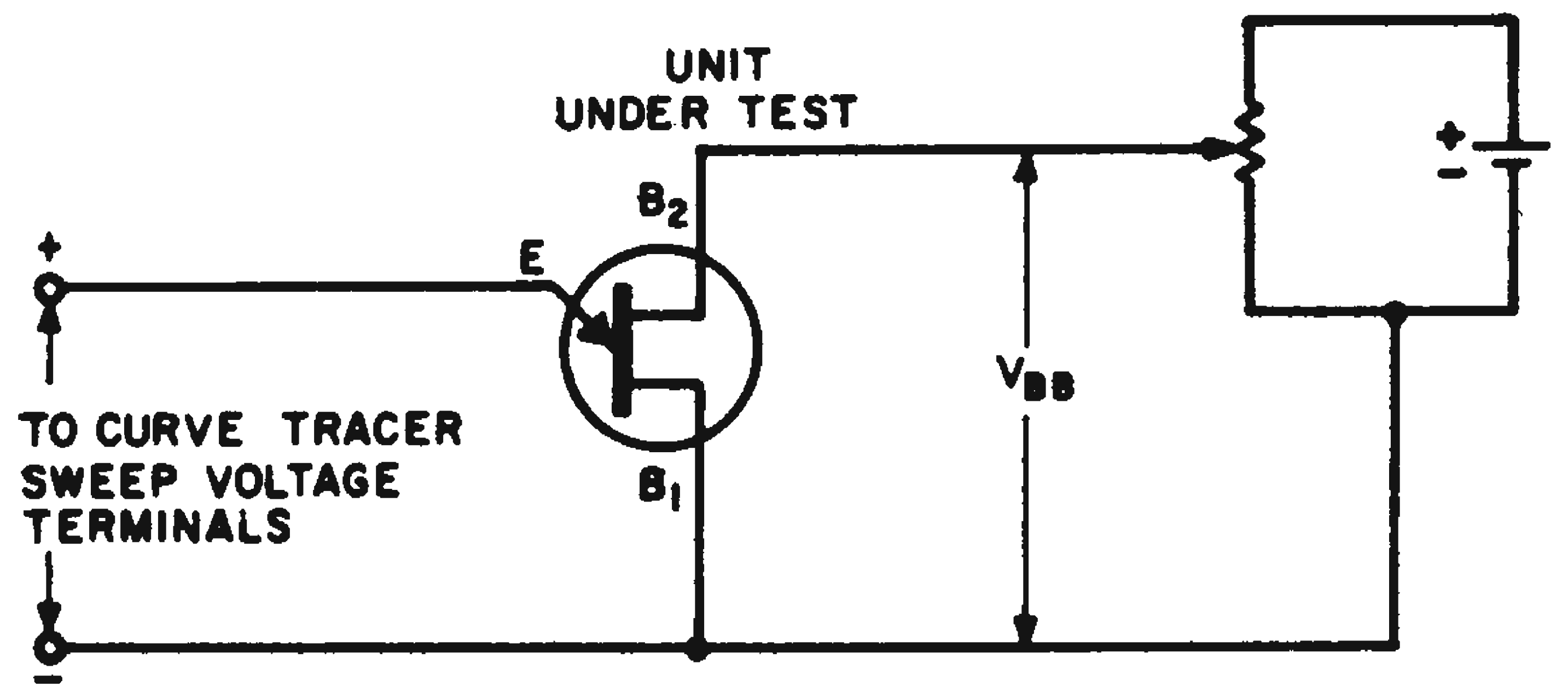

Adding bias battery between unijunction bases permits viewing of negative resistance region on curve tracer.

$$\nu = \frac{V_p - 0.7}{V_{BB}}$$

where

V_p is the peak-point emitter voltage and V_{BB} is the interbase voltage.

Stanley V. Walter, electronics engineer, Bell Aerosystems Co., Buffalo, N. Y.

Square-Wave Doubler Uses Four-Layer Diode

A system for square-wave doubling was needed in the design of test equipment. The following circuit filled the bill. In operation, a 30-v p-p square wave applied at the input is differentiated by C_1 and R_1. The resulting negative and positive pulses are fed, via steering diodes CR_1 and CR_2, to CR_4, a 4E20-8 Shockley diode, to initiate its firing.

The conditions before firing are as follows: Capacitor C_2 is charged to +14 v dc through R_2 and CR_6, CR_6 providing the return for the charging current.

With the application of the input square wave, the positive 30-v pulse is coupled through CR_1 and fires CR_4. The very low impedance now represented by CR_4 allows C_2 to discharge through the path consisting of CR_3, CR_4, and CR_5. Upon the initiation of the discharge of C_2, Q_1 is turned on to saturation through R_3. As the discharge current from C_2 falls below the holding current of CR_4 (approximately 8 ma.), CR_4 again assumes its high impedance state; C_2 charges up to +15 v dc; and Q_1 resumes its low conduction state. A negative 30-v pulse is coupled through CR_2, fires CR_4 and initiates the same sequence of events.

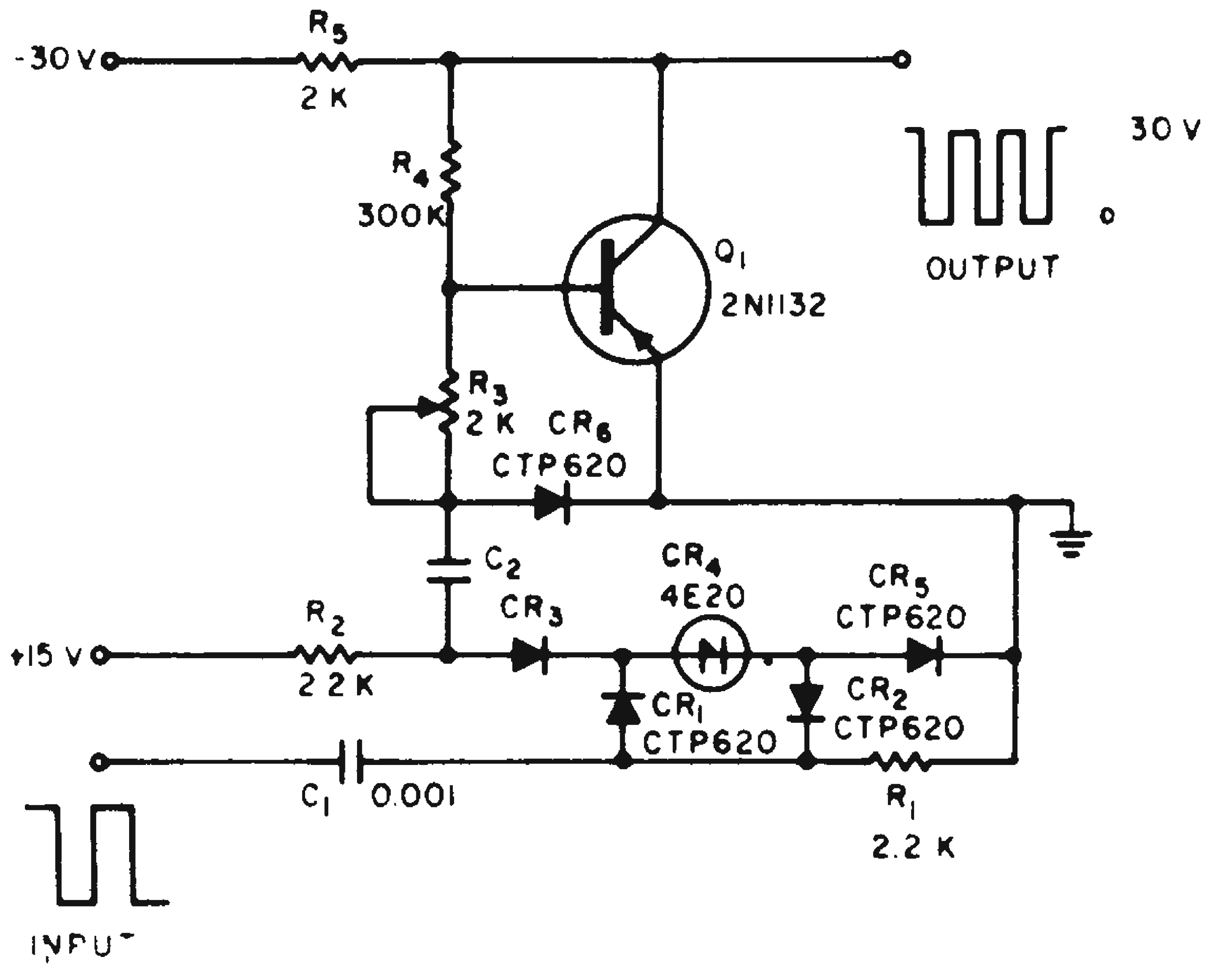

Value of capacitor C_2 is dependent on frequency. At 20 Kc, C_2 = 0.02 μf.

The 'on time' of Q_1 is primarily a function of the R_3C_2 time constant and the 4E20-8 holding current. R_3, the variable resistor, is adjusted for the desired symmetry of the output waveform.

Diode CR_3 is used to prevent the positive pulse from appearing at the +15-v dc supply and CR_5 is used to prevent the negative pulse from being shorted to ground.

Using the values shown, a 30-v p-p, 50-Kc square wave with rise and fall times better than 100 nsec was obtained from a 30 v p-p, 25-Kc input square wave.

Charles R. See, design engineer, Litton Data Systems, Van Nuys, Calif.

DC Presence Indicator Checks Three Voltages

The circuit shown here will indicate presence of all three voltages in a typical pnp digital system with negative collector and clamp supplies, and a positive bias supply. An npn system could use the complementary version of the circuit. Failure of any one of the voltages will extinguish the "dc-presence" lamp.

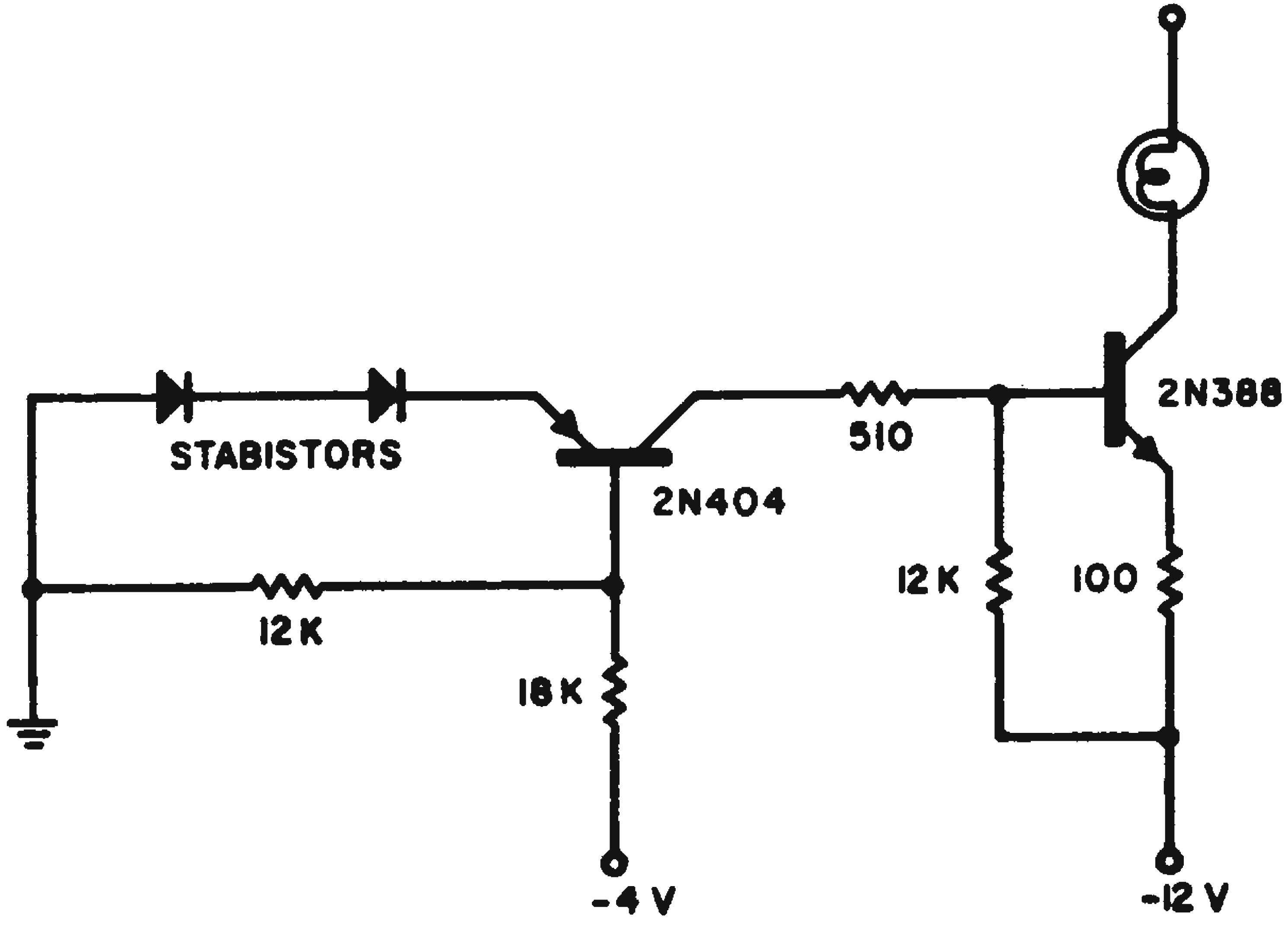

All three voltages must be present in modified AND gate to have bulb light.

The circuit is a modification of the typical transistor AND circuit. The conventional circuit will not indicate properly because of voltage incompatibility. The pnp-npn AND circuit shown in the diagram uses the three voltages as inputs.

The pnp-npn circuit detects in a true AND function. Absence of any one voltage will extinguish the lamp. The stabistors provide a tight control over the error level of the clamp voltage. Resistor R_4 limits the initial current surge present during turn-on of a cold bulb.

Daniel Chin, development engineer, Computer Control Co., Inc., Framingham, Mass.

Simple Voltage Calibrator Has Stable 10-Kc Output

This is a simple internal voltage calibrator circuit with a 10-Kc square wave 2-v ± 2 per cent and with a good ground reference. A 25-v source, which could be adjusted to better than 1 per cent, was available for the reference voltage.

The circuit consists of a 10-Kc astable multivibrator and a pnp switch. Resistors R_5 and R_6 comprise a 1 per cent 5-v divider for frequency stability and to limit V_{BE}. Returning discharge resistors R_3 and R_4 to +25 v also aids in frequency stability. R_8 was chosen to supply current to the Q_3 bias divider R_7 and R_9 during the off time of Q_2 thereby preventing additional charging current for C_2 and improving symmetry.

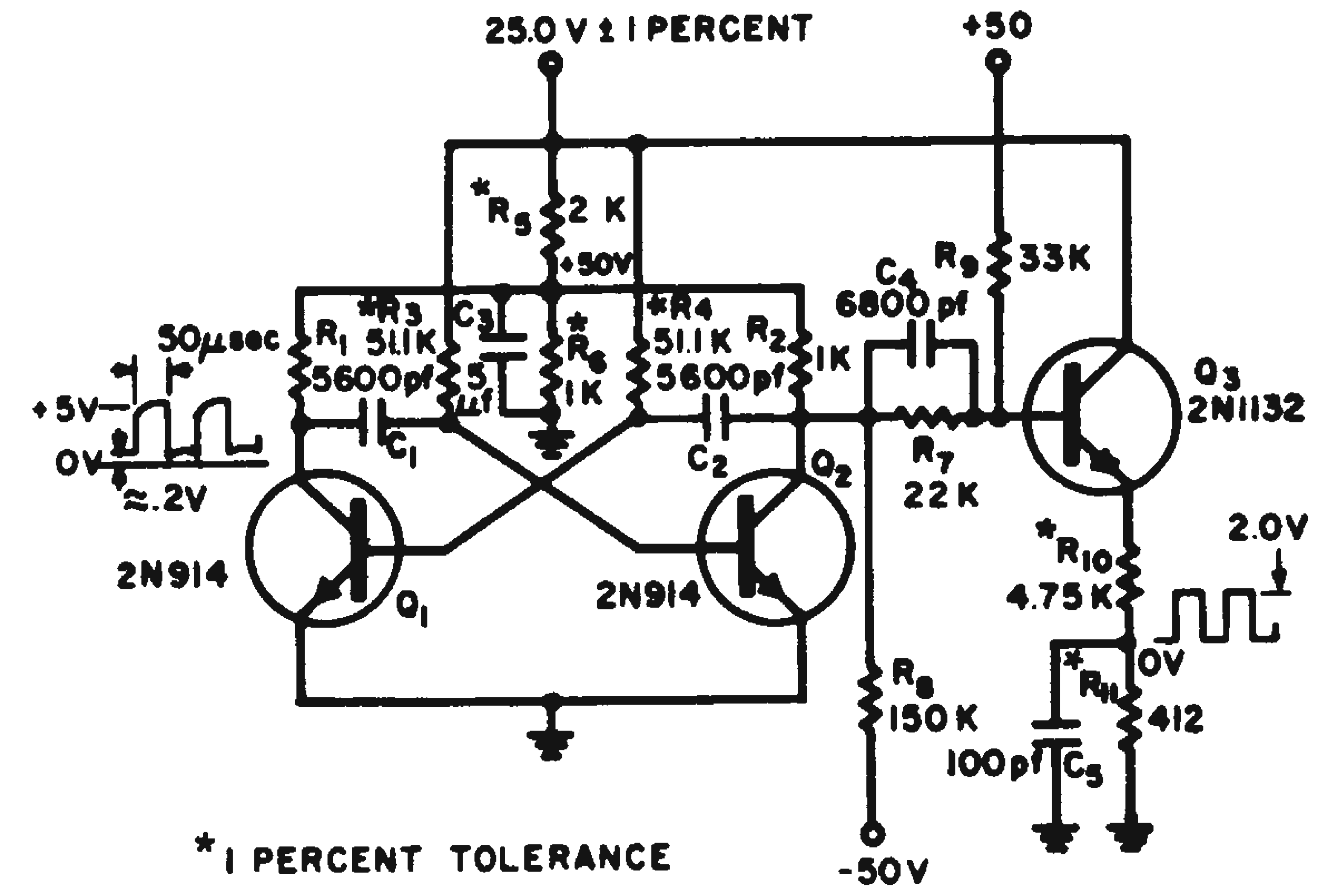

Astable multivibrator and switch gives 10-Kc square-wave output that is within 2 per cent.

Since the ratio of R_{10} to R_{11} is 10:1, the effect of I_{CO} will also be reduced by this factor. C_4 is a speed-up capacitor and C_5 is used to integrate switching transients.

This circuit was operated from −50 to +70 C with the only noticeable change being a 1 per cent change in frequency at −45 and +70 C. Fixed film resistors were used throughout.

Abner Owens Jr., engineering associate, Fairchild Defense Products Div. of Fairchild Camera and Instrument Corp., Clifton, N. J.

Resonant Reed Relays Make Simple Scope Marker

A simple means of marking octave intervals is valuable in making measurements on audio amplifiers. Resonant reed relays are the answer. As shown in the diagram, a variable audio oscillator is swept through the desired range by either electrical or electromechanical means. The sweep-controller also generates a sawtooth necessary for driving the oscilloscope's horizontal deflection. The output of the audio oscillator feeds the unit under test and an auxiliary amplifier, which drives the resonant relays.

The output of the unit under test is rectified and fed to the dc vertical input of the oscilloscope.

The outputs of the resonant relays are connected together and provide a burst of bright pulses to the grid of the CRT as the oscillator passes through reference frequencies. By choosing resonant relays at octave intervals a complete response curve of the unit under test is presented. Since the relays are inexpensive plug-in units, they can be easily interchanged to closely examine frequency response curves in selected portions of an audio spectrum.

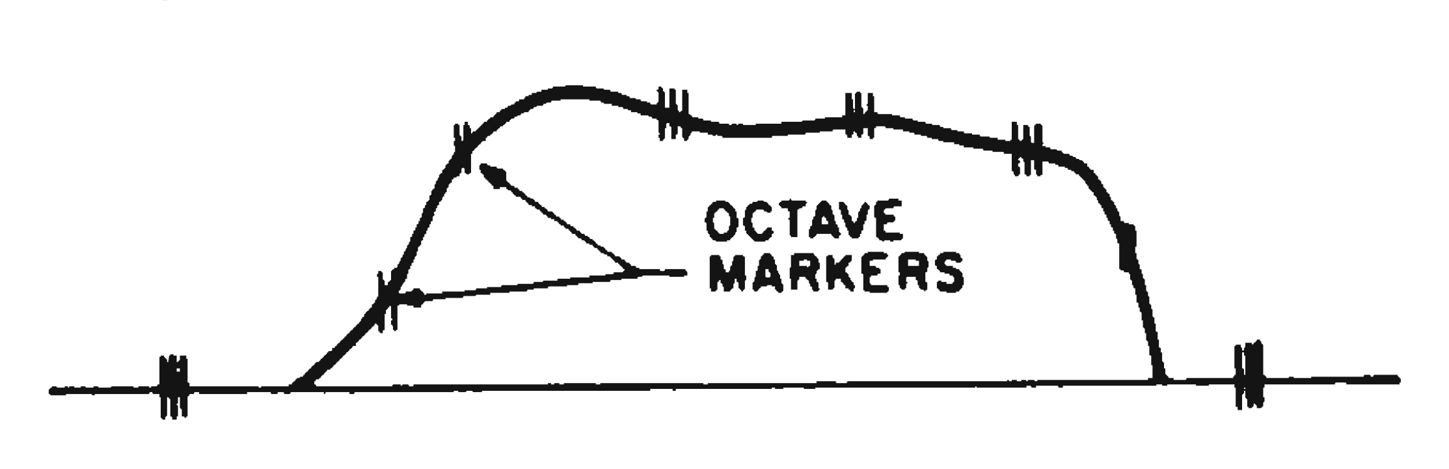

Resonant reeds in parallel to the scope Z axis provide a bright pulse at each octave interval.

A. Kronenberg, senior engineer, Fairchild Stratos Corp., Electronic Systems Div., Wyandanch, L. I., N. Y.

Technique For Simulating Strain-Gage-Transducer Signal

It is generally agreed that shunt-resistance signal simulation is not suitable for the semiconductor strain-gage transducer. This is due to the relatively large change in bridge resistance with applied input and the high temperature sensitivity of the semiconductors. However an alternate method could be used. The components needed are shown in the diagram.

When a simulation signal is required, the output terminals of the transducer are shorted out, and one of the output connections is transferred to one of the input terminals. The voltage across the output leads will be close to half of the excitation voltage, dependent on the matching of bridge resistors.

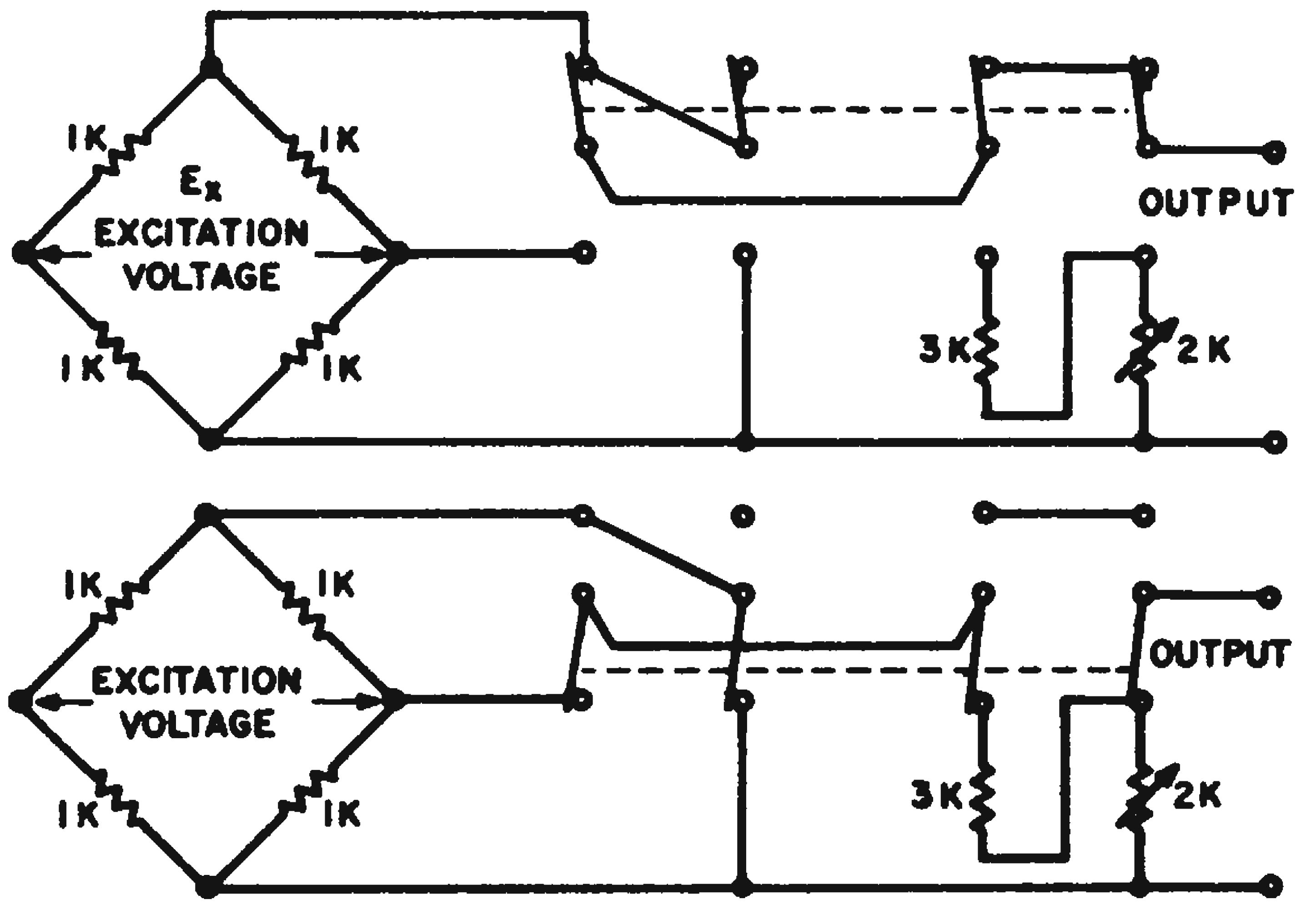

Attenuation section of strain-gage signal simulator could be incorporated in common signal conditioner.

The ratio between this voltage and the rated output voltage is slightly more than 2 to 1. To bring the simulated signal down to a voltage suitable for recording or transmission, an attenuator, or voltage divider is used. Using a 3-K and 2-K resistance in series will provide a voltage across the 2-K resistance of about 2/5 x $E_x/2$. With 25-v excitation this will produce a signal fairly close to that of rated output. The described resistance combination will also provide an input impedance to the signal conditioner or recorder, similar to that of the transducer proper.

Any malfunction of the strain-gage bridge will show up as a drastic change in the simulated signal. The latter is in a fixed ratio relationship with the rated output and also directly proportional to the excitation voltage.

The temperature effect on the simulated signal is negligible, amounting to less than 0.2 per cent of rated output over a temperature change of 200 F.

The difference in simulated signal with no pressure or rated pressure applied to the transducer, is about 0.5 per cent of rated output.

This form of simulation also is applicable to the standard wire-type strain-gage transducer. For a 500-ohm bridge with a 10-v excitation and 30 mv rated output the attenuation would be about 200 to 1, which could be accomplished with a 100-K and a 500-ohm resistor in series. Again the impedance presented to the recording or readout device basically would be unchanged. In a telemetry system this method will have the advantage of the elimination of the calibration resistor. The attenuator will be common for all similar transducers. Shorting the output terminals and switching over the output lead easily can be done on a stepping switch, which also will introduce the attenuator into the output circuit when signal simulation is required.

Sigmund Meieran, engineer, The Boeing Co., Seattle, Wash.

Voltage Band Comparator Uses Tube-Transistor Circuit

We require a simple circuit that would energize a relay as long as an applied voltage remained within a high and low limit. The voltage could vary several hundred

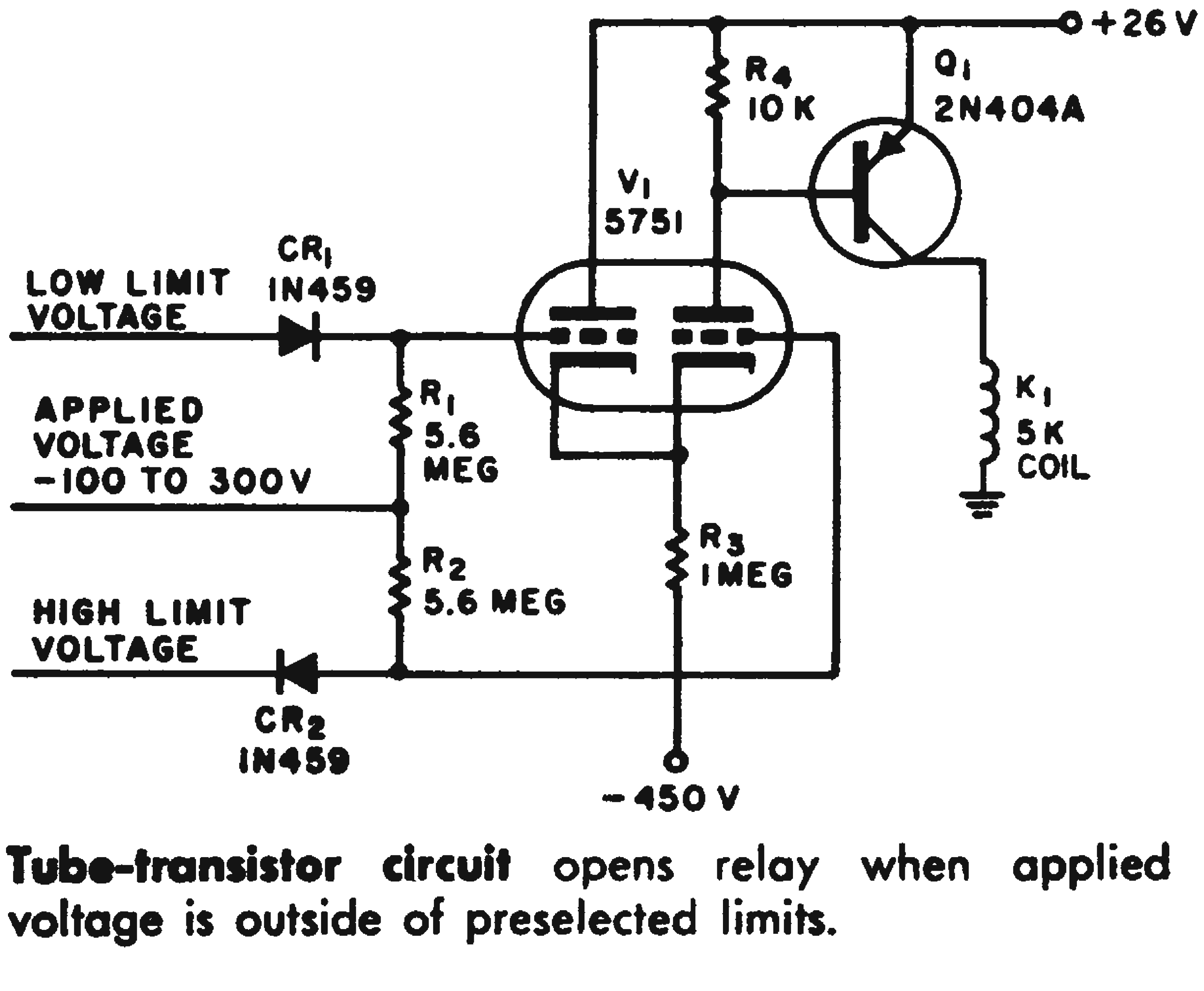

Tube-transistor circuit opens relay when applied voltage is outside of preselected limits.

volts, but a maximum of 1 μa could be drawn from the source. The circuit was required to respond within about one volt of the limits, which could be anywhere in the range of applied voltage.

The circuit designed to meet these requirements is shown in the diagram. As long as applied voltage is within limits, neither of the diodes CR_1 or CR_2 conducts, and both grids see the same potential. Current is drawn through the left section of the tube, turning transistor Q_1 on, which in turn keeps relay K_1 energized.

If the applied voltage drops below the low limit, diode CR_1 conducts, and a voltage develops across R_1. If the applied voltage rises above the high limit, diode CR_2 conducts, and a voltage develops across R_2. In both cases the voltage drop appears as a potential difference between the two grids, shutting off the left section. Thus, outside the limits, Q_1 is turned off, and relay K_1 is deenergized.

G. Richwell, staff engineer, Reflectone Electronics, Inc., Stamford, Conn.

Test Set Displays Zener Diode Characteristics

Several important functional characteristics of Zener diodes can be determined with the circuit shown in the figure. By applying the sawtooth waveform obtained from the scope, the resultant display of the Zener diode ramp allows:

1. The Zener voltage to be measured within the accuracy limits of the scope.
2. The Zener voltage change over the applied current range to be determined.
3. Some measure of the transient response characteristic to be obtained if timebase of the scope is varied.
4. The characteristics of the "knee" to be observed.

The value of the current-limiting resistor is determined from the manufacturers ratings of maximum current or power and the maximum voltage applied to the circuit.

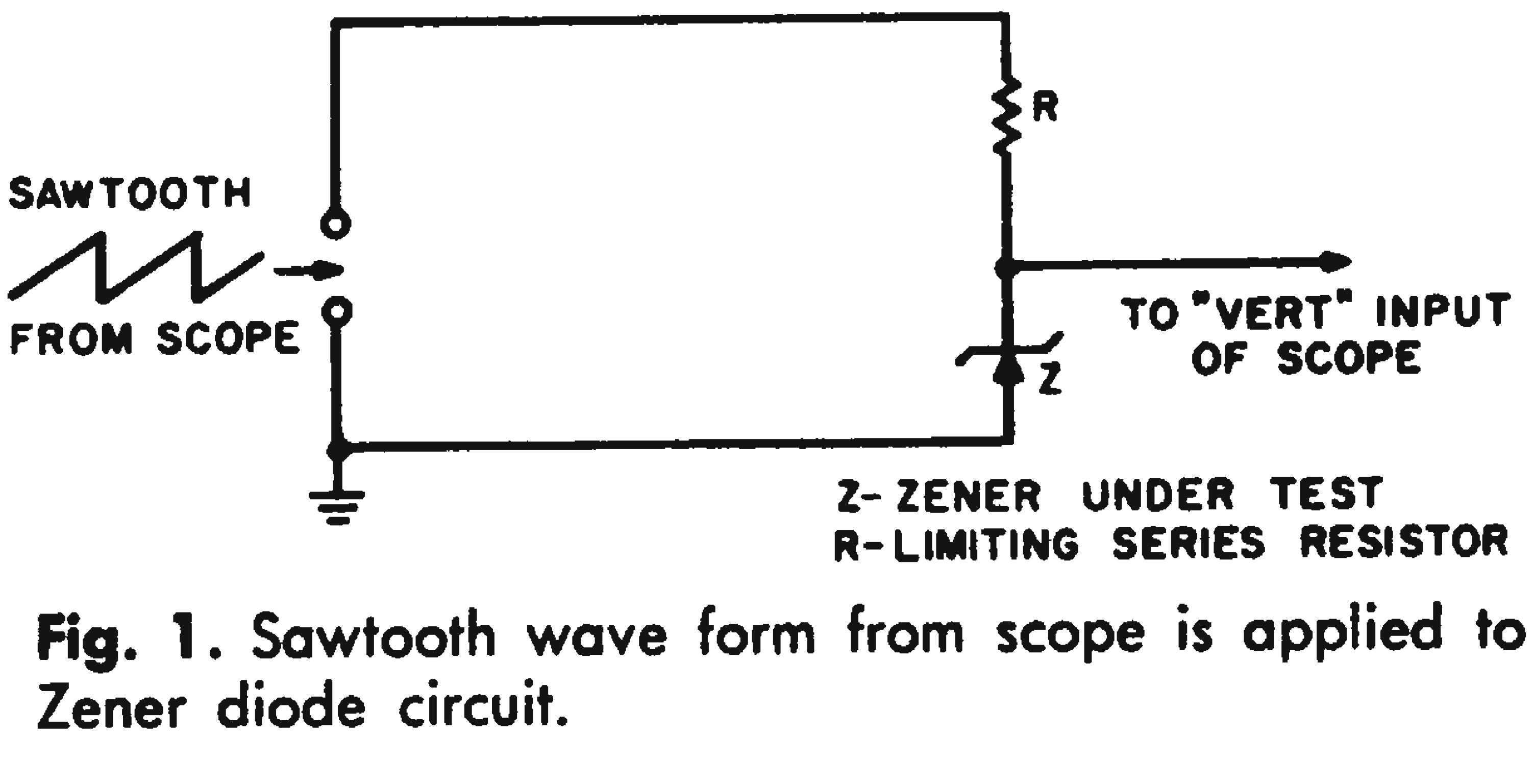

Fig. 1. Sawtooth wave form from scope is applied to Zener diode circuit.

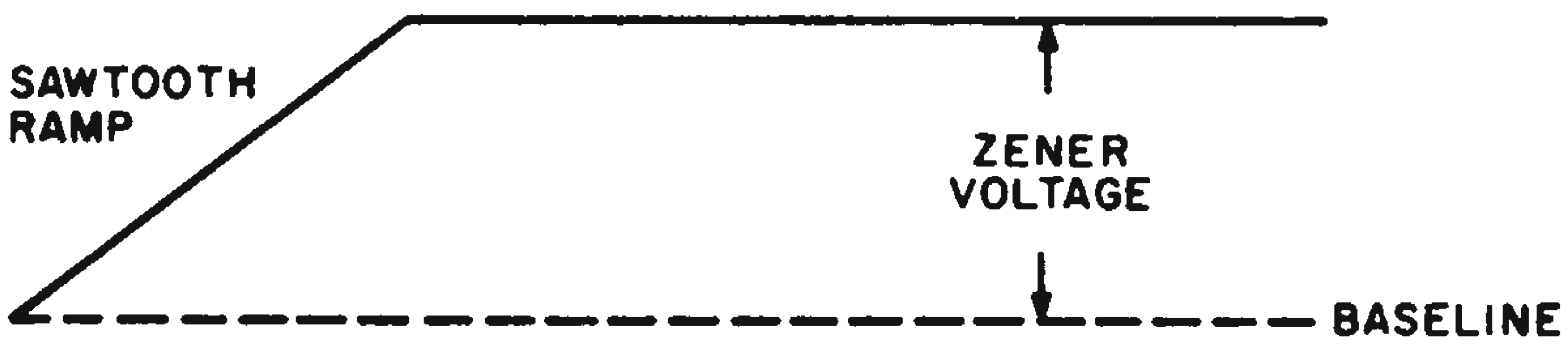

Fig. 2. Resultant Zener display allows several functional characteristics to be determined.

If the maximum sawtooth voltage is E_p, the voltage across the resistor is:

$$E_R = E_p - E_Z$$

where E_Z is the nominal Zener voltage.

Eric H. Levy, supervisor, Avionic Service Dept., Bendix Radio Div., The Bendix Corp., Baltimore, Md.

Automatic Continuity Detector Performs Double Test Function

This simple and reliable circuit will check the continuity of a conductor and simultaneously test that conductor against all other conductors in the system under high-voltage conditions.

The automatic continuity tester, of which this circuit is a part, can test 500 circuits at the rate of 10 circuits per second with an adjustable high-potential voltage from 100 to 1000 v dc. The components utilized in the detector consist entirely of resistors and a Western Electric type 280R differential relay.

A relay of this type is constructed with a coil consisting of at least two electrically identical windings and a magnetically biased armature for sensing the direction of current through the windings. As shown in the schematic diagram, the continuity testing function consists of a summation of currents $I_1 \pm I_2$ through the two windings of the relay. When $I_1 = I_2$ the relay remains inactive, but when the balance is upset by either the opening of C_a or shorting of C_a to any other conductor, the relay operates.

This statement can be verified by starting at the +250-v point and tracing the circuit through both sides of the relay to the −250-v point.

The hi-pot function, performed each time a conductor is checked for continuity, is achieved as follows:

While C_a is being tested, a potential of −250 v is applied through the stepper switch arm; at the same time, +250 v is applied to all other conductors through their associated resistors, R_b, R_c, etc. Hence, the difference of potential existing between the conductor under test and all other conductors is 500 v.

With R_a, R_b, R_c, R_d equal to R_s (200 K) the circuit can detect 300-f K shorts between conductors. This sensitivity is made possible by the mechanical adjustment capabilities of the differential relay, which permit reliable and consistant operation down to 0.5 ma. Since these relays are factory-adjusted, only a slight modification is necessary and consists of manipulating the pole pieces until a current of 0.0005 amp operates and holds the armature against the contact associated with the energized winding.

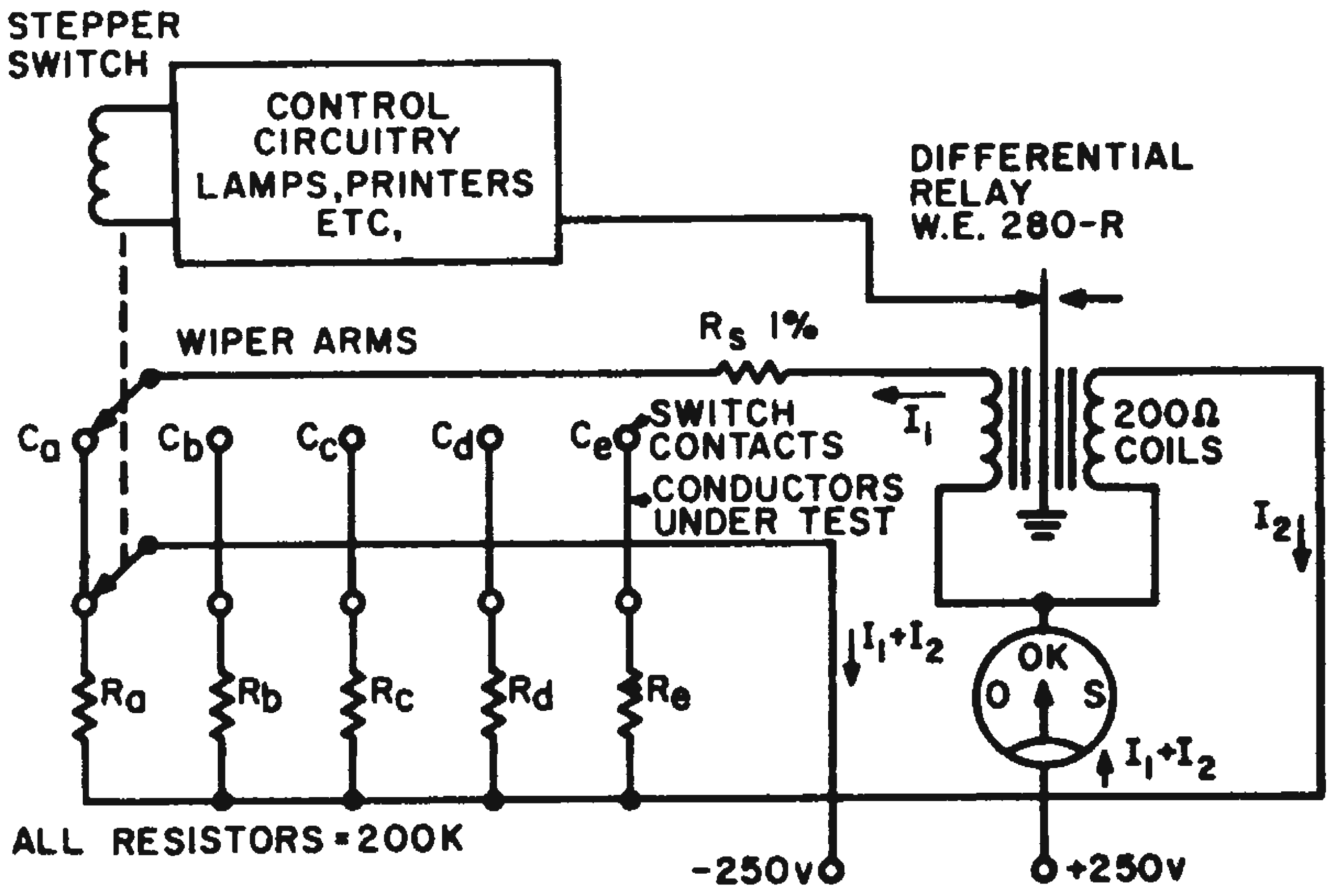

Simultaneous continuity and high-voltage tests can be performed by means of a differential relay.

One pole piece then is adjusted to keep the armature on one side, as indicated on the schematic, while maintaining a 0.0006-amp operating sensitivity. This adjustment insures that the relay will remain balanced or inactive when no current or equal currents flow through the two windings.

To obtain the maximum amount of information from a reject circuit, a milliammeter was inserted in the total current line. Full scale was calibrated to twice $I_1 + I_2$ so that a good circuit was indicated on the meter as half-scale reading. When an "open" reject (less current) was encountered, the meter read less than mid-scale and when a "short" reject was encountered the meter read more than mid-scale. With the meter labeled "open," "good" and "short", valuable troubleshooting information is gained.

Frank L. Egenstafer, project engineer, Jerrold Electronic Corp., Hatboro, Pa.

Biased Diode Reduces Non-Linearity of AC Meters

Ac metering circuits are non-linear because of the non-linear impedance of rectifier diodes. The effect of the non-linearity can be reduced by making the excitation voltage very large compared with the diode voltage drop of approximately 0.5 v. However with transistorized circuitry, large voltages are troublesome.

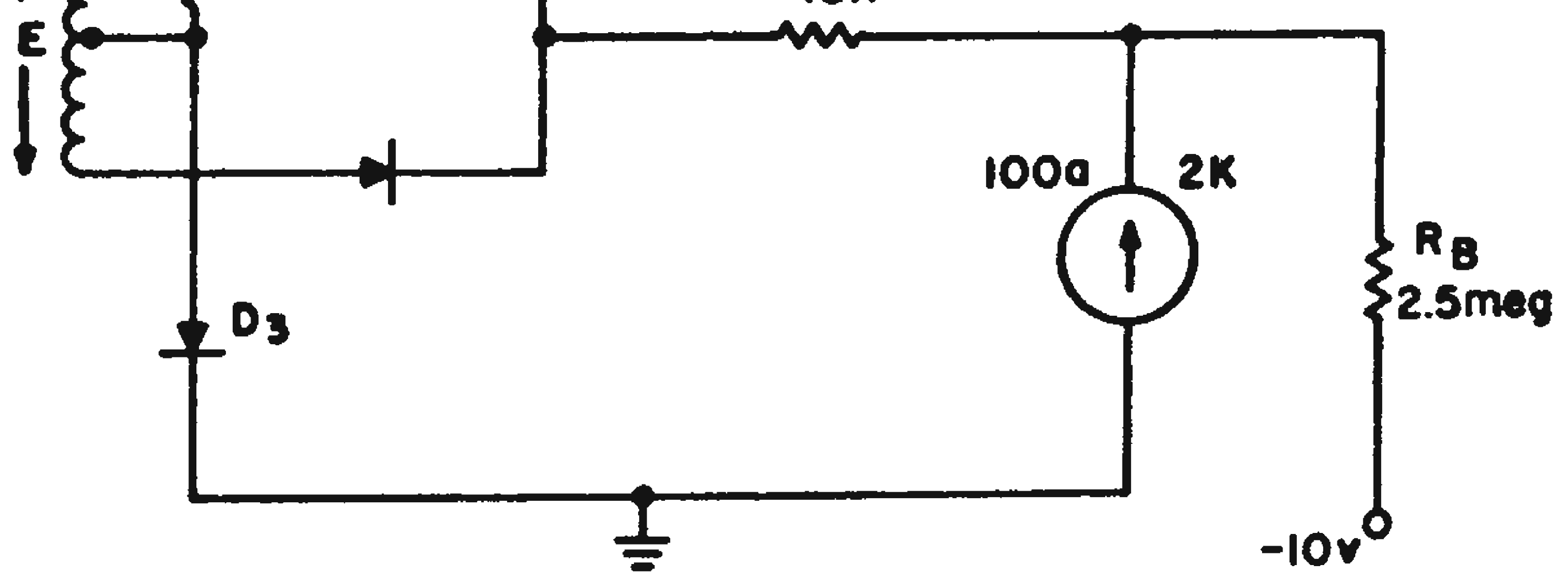

Biased diode D_3 in ac metering circuit overcomes the effect of 0.5 v diode voltage drop; circuit operates with greater linearity.

An alternate approach is to add the dc biased diode, D_3, and bleeder resistor, R_B as shown in the figure. Sufficient dc bias current is passed through D_3 to exceed the maximum (peak) current required by the meter. The best linearity, it has been found, is achieved with the bias current through D_3 approximately twice the peak current.

The circuit values indicated in the schematic yielded 1 per cent linearity with a 100 μa, 2,000-ohm meter movement and an applied voltage, E, of 10 v rms. To achieve similar results without D_3, required voltages greater than 50 v.

Carl L. Bose, senior engineer, Nortronics Div. of Northrop Corp., Hawthorne, Calif.

Burned Out Transistors Save Time and Money in Heat Tests

In design of circuits using power transistors, heat-dissipation tests frequently are run with the transistors mounted on heat sinks. To be valid, these tests should be run using mockup heat sinks and equipment as close to the final package design as practical. The same type of power transistor should be used in the mockup and the final package.

With some types of silicon power transistors costing $100 or more a piece, it is expensive to risk these valuable components in these tests. Also, the control of dissipation in multiple transistor circuits requires the services of an electronic technician to set up and operate the equipment.

In the method described here, the transistors can be operated by the environmental test technicians because a simple, stable series circuit is used.

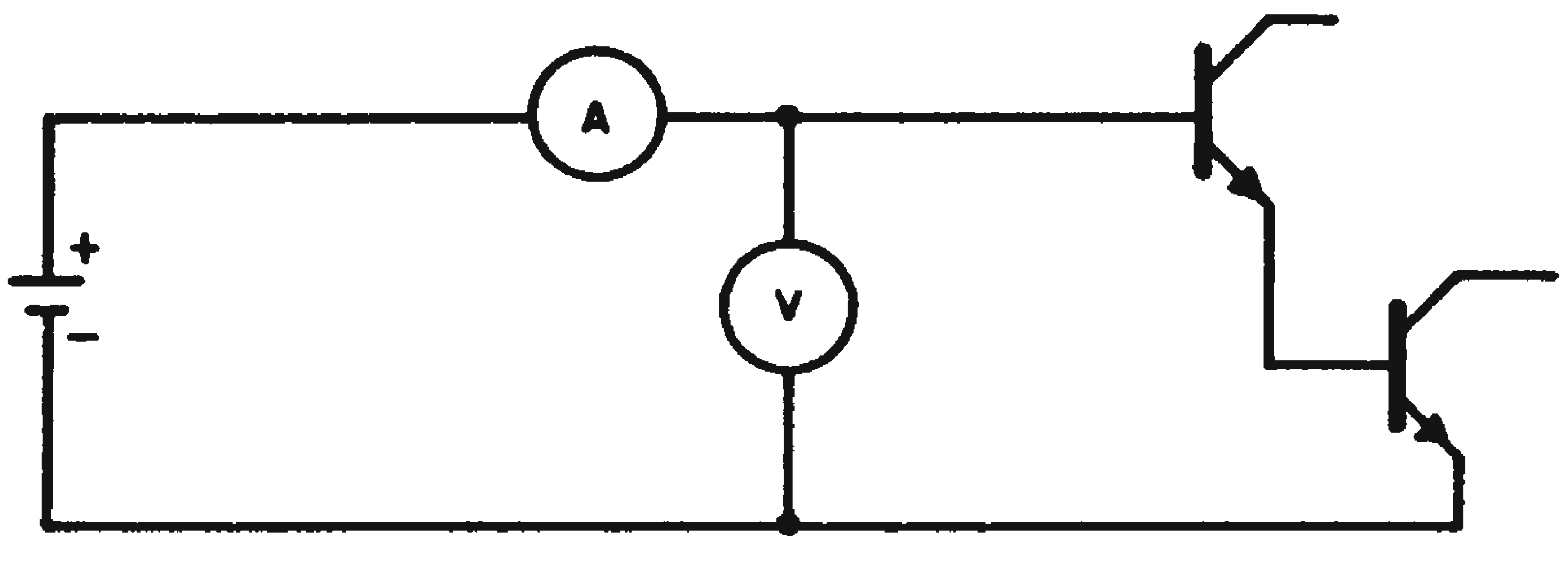

Simple series circuit provides controlled dissipation for heat tests.

We have found that burned-out (shorted collector-to-emitter) transistors of the same case type as those to be used in the equipment make good resistors for these heat tests. (Burned-out transistors are usually in good supply around development labs.) The burned-out transistors are mounted on the heat sinks and a low voltage high-current source is connected base-to-emitter or collector-to-emitter. The base-to-emitter resistance usually is higher. (Typical resistance for a 2N1016 was 1.8 ohms for a current of 10 amp.) By monitoring current and voltage, the wattage desired can be dissipated in the exact mechanical configuration of the final equipment. In most burned-out transistors, the base diode is still intact so the current must be passed in the forward direction of the base diode.

Frederick W. Paget, advanced development engineer, Sylvania Electric Products, Inc., Sylvania Electronic Systems, Needham, Mass.

Low-Current Threshold Detector Uses Backward Diode

The schematic diagram shows a simple threshold detector employing a Hoffman Uni-Tunnel (backward) diode. This device is of the tunnel-diode family, possessing a negative-resistance region at very low current. Peak current for this diode is at about 20 μa.

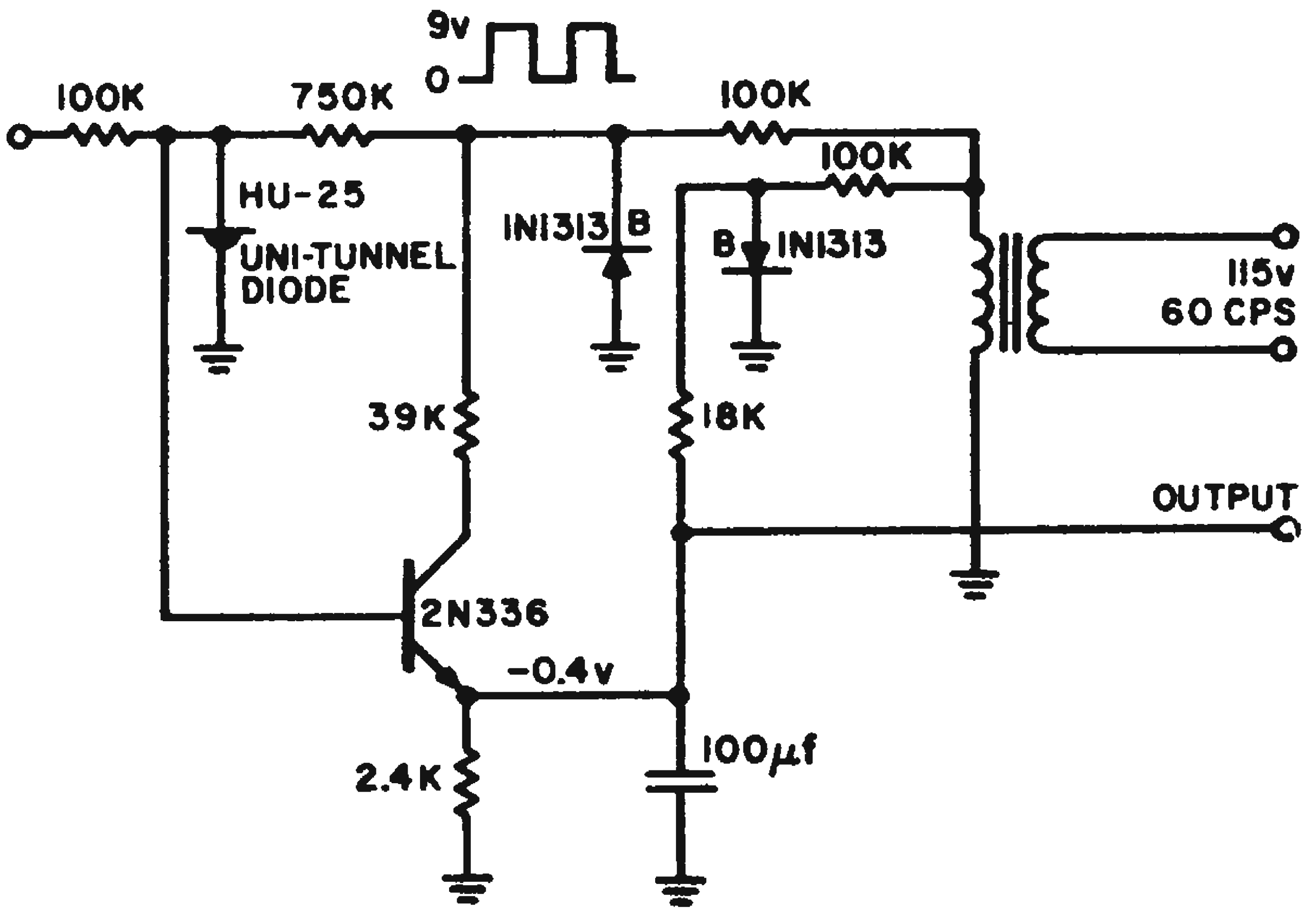

Threshold detector is sensitive to inputs of less than 7 μa.

The dc input signal is applied to the HU-25, together with a square-wave current obtained from one of the 1N1313 regulators. Below the trip point the diode acts essentially as a very low impedance, and the square-wave voltage across it is on the order of 10 mv or less. As the dc input cur- at which this ac voltage will suddenly jump to about 0.4-v peak. In the circuit shown, this occurs for an input current of slightly less than 7 μa. Input power is less than 5 μwatt.

The 2N336 is supplied with a 9-v square wave supply to the collector through the 39 K resistor and an emitter bias of about 0.4 v. Under these conditions the collector voltage is a square wave of about 7-v peak. When the HU-25 switches the 0.4-v signal on the base is sufficient to saturate the transistor and the output drops to zero.

Richard F. Shea, consulting engineer-electronics, General Electric Co., Schenectady, N. Y.

Comparator Circuit Simplifies Integrator Time-Constant Check

A conventional method for checking the time-constant accuracy of electronic integrators is shown in Fig. 1. This procedure is costly and elaborate in that it involves an accurately controlled reference voltage, a precision timing mechanism and a digital or balancing-type dc voltmeter. By this method an output voltage (e_o) measurement is obtained after a known input voltage (e_i) has been applied to the integrator for a controlled period of time (t). The time constant (RC) then is determined from the integration equation:

$$\frac{e_o}{e_i} = -\frac{t}{RC}$$

The method shown in Fig. 2 provides a simpler and less costly approach to the problem.

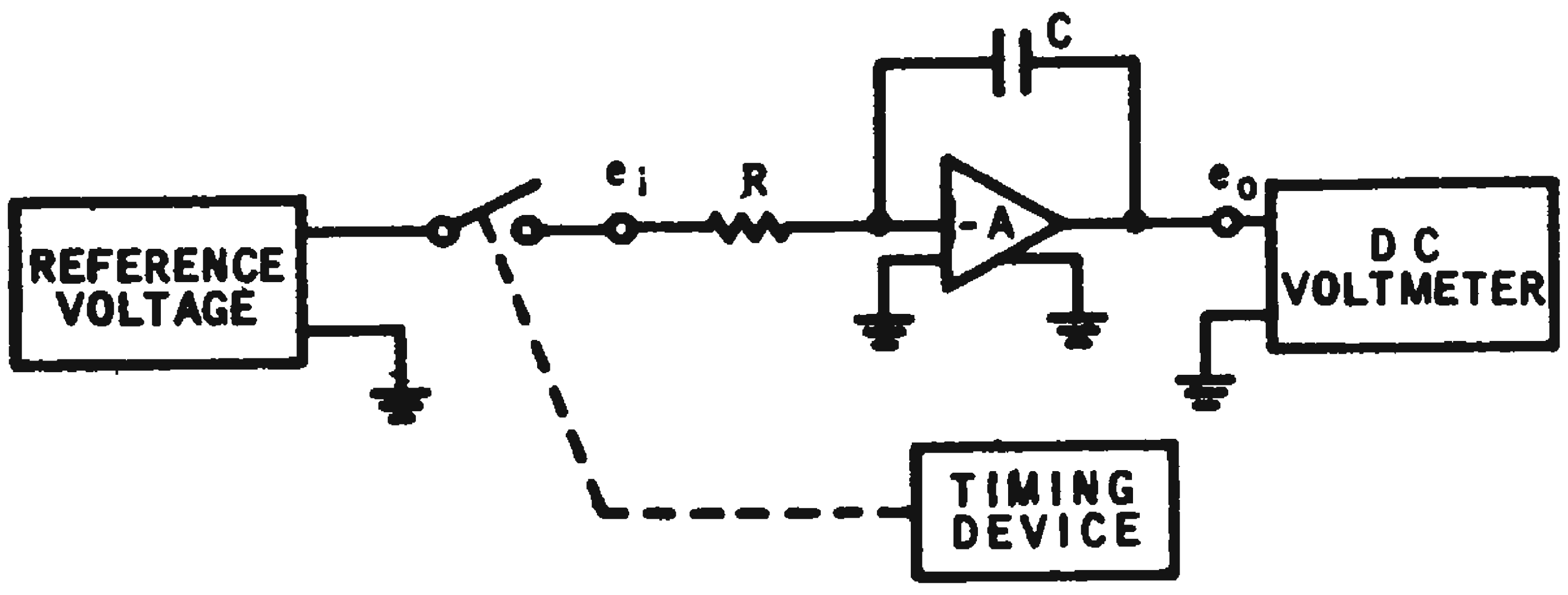

Fig. 1. Conventional measuring technique requires high-accuracy instrumentation.

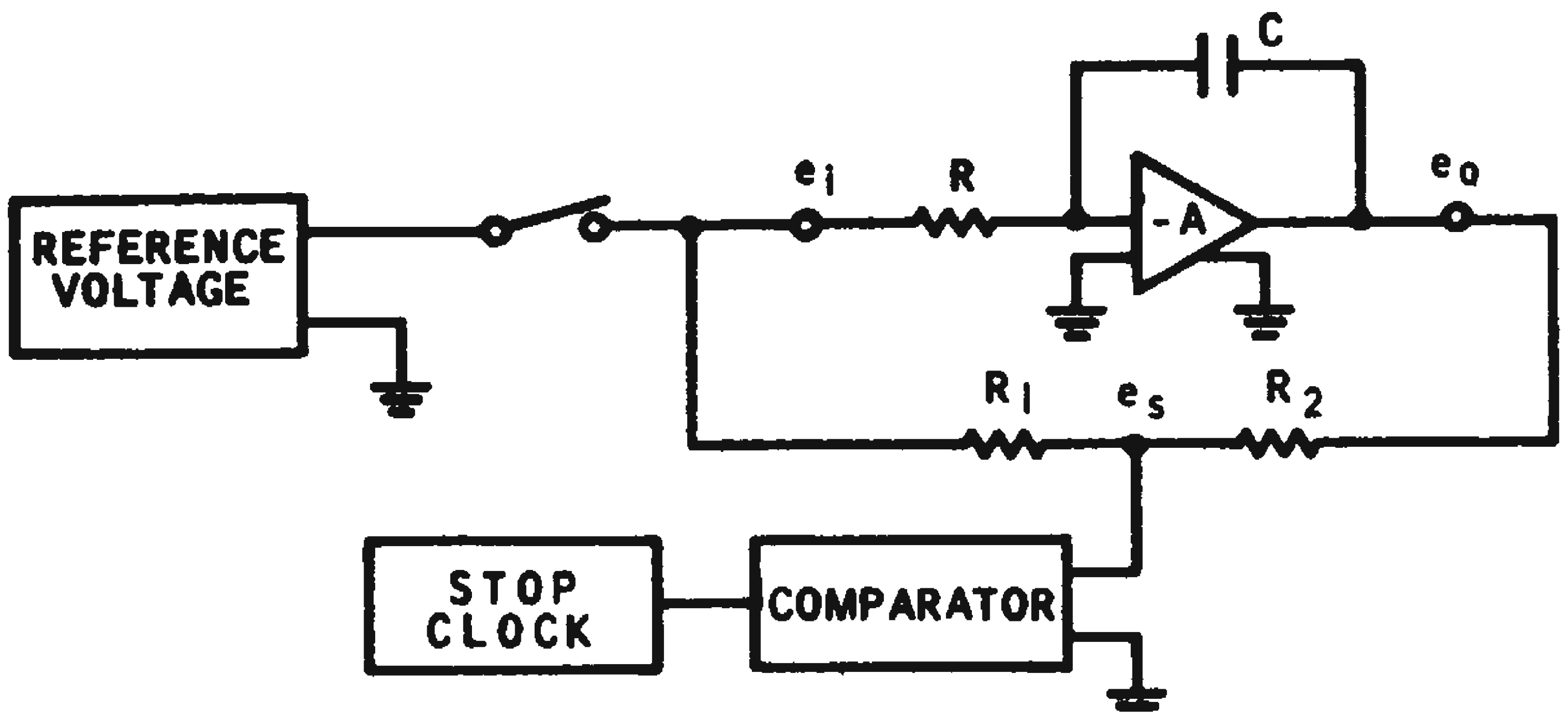

Fig. 2. Stop-clock-comparator gives voltage ratio without determining actual voltage.

Precision resistors R_1 and R_2 are chosen to provide a summing voltage (e_s) equal to zero when the output voltage is some desired multiple of the input voltage. The summing point is connected to the input of the dc voltage comparator which, in turn, operates to stop an electric stop clock (or electronic counter) when the summing voltage is zero.

Application of the input voltage will start the clock. When $e_o/e_i = R/R_1$, the summing voltage will be zero and the clock will stop. Thus, the elapsed time t is found, the voltage ratio e_o/e_i is known (without knowing the actual voltages) and the time constant may be determined from the integration equation as before.

Richard F. Cutler, project engineer, Sperry Utah Co., Salt Lake City, Utah.

Reducing Effect of Intermittent Instrumentation Loads

Five identical sensor elements are used in a control system. However, the summing network equivalent impedances are different, necessitating the addition of resistor R_c to provide a constant 10-K load to the sensor secondary, as in Fig. 1a. When selected on this basis, the intermittent connection of the instrumentation load reduces the equivalent impedance to $10 \cdot 105/115 = 9.13$ K. This change in impedance results in a 1-v drop in the sensor output voltage. This creates difficulties in calibration and acceptance.

The problem was solved by using the circuit in Fig. 1b. Here, R_1 and R_2 are selected so that the sum of their values compensates R_L to the desired 10 K equivalent. Resistor R_1 is made larger than R_2 so that the effect of connecting R_g is minimized. The final ratio of R_1 to R_2 must be compromised to provide sufficient voltage at their junction with R_g to satisfy the instrumentation requirements.

As an example assume:

$R_L = 18$ K
R_c to be 10 K

then

$$R_1 + R_c = 22.5 \text{ K} \left(10 = \frac{18R_c}{18 + R_c}\right)$$

let

$R_1 = 16$ K

$R_2 = 6.5$ K

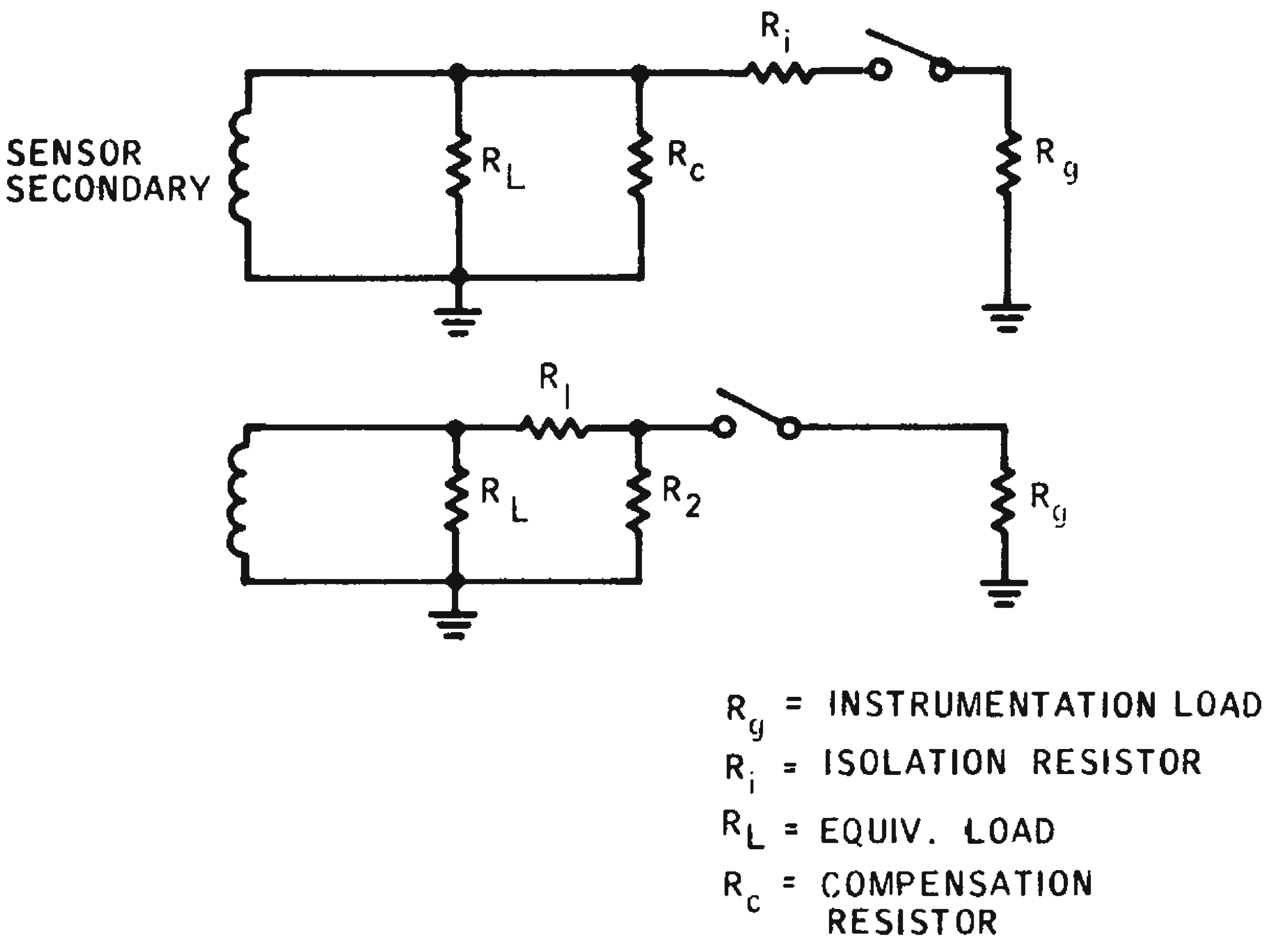

Fig. 1. Modification of sensor circuit reduces effect of loading.

with R_g connected

$$R_c' = 16 + \frac{6.5(30)}{36.5} = 21.35$$

$$\text{Required: } \frac{18(21.35)}{39.35} = 9.75 \text{ K}$$

R. L. Stoval, project engineer, The Bendix Corp., North Hollywood, Calif.

Double-Exposure Reveals Zener's Zero-Temp Coefficient

Here is an easy method we have been using to determine the Zener diode current at which the unit's voltage-temperature coefficient is zero. This zero coefficient is a characteristic of Zener diodes of about 5 v that are operated at low currents.

Our equipment consists of a curve tracer, a Polaroid camera and a hot-air blower. It is used as follows:

1. Photograph the characteristic of the Zener at ambient temperature.
2. With the blower, heat the Zener to a higher temperature.
3. Expose the film once more, photographing the new characteristic at the higher temperature.

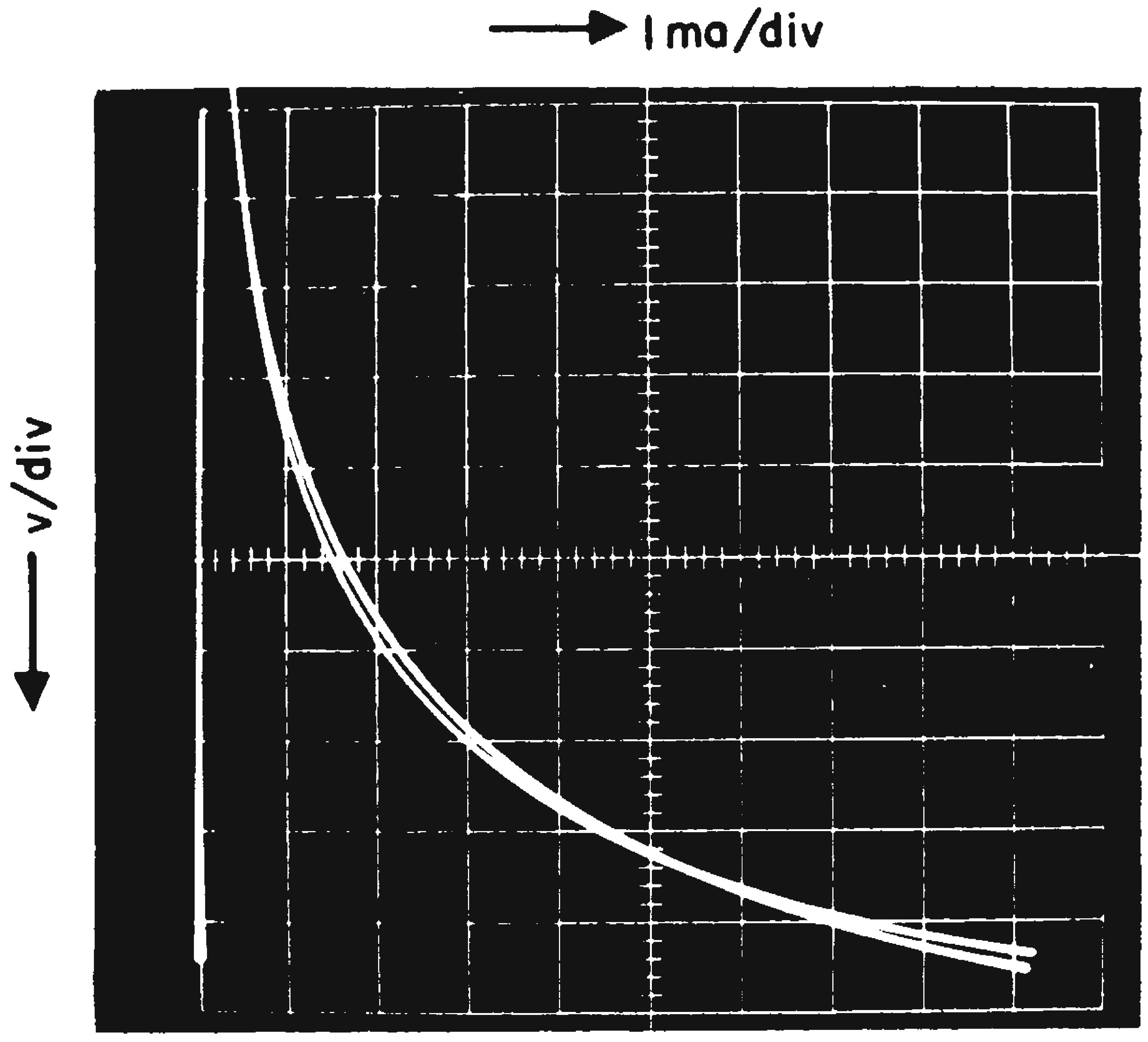

Point at which Zener-diode temperature coefficient is zero can be read off from intersection point of characteristic curves. (Photographed at two different temperatures).

The desired value of current is found, from the developed photo, from the intersection point of the two curves. To increase the resolution, suitable bias may be applied for zero suppression (For a 5-v Zener, a 4.5-v bias was found to be sufficient).

Raphael Mor, Research Engineer, Scientific Dept., Ministry of Defense, Tel-Aviv, Israel.

Temperature-Stabilizing Emitter Followers

There are many applications in instrumentation systems for emitter followers. The conventional emitter follower in Fig. 1a has two problem areas when used in dc-circuit applications. These are: an inherent drift with temperature produced by variations in the base-to-emitter voltage (V_{be}), and a dc offset equal to the base-to-emitter voltage. The temperature stabilized emitter follower of Fig. 1b provides a simple but effective method of reducing both effects.

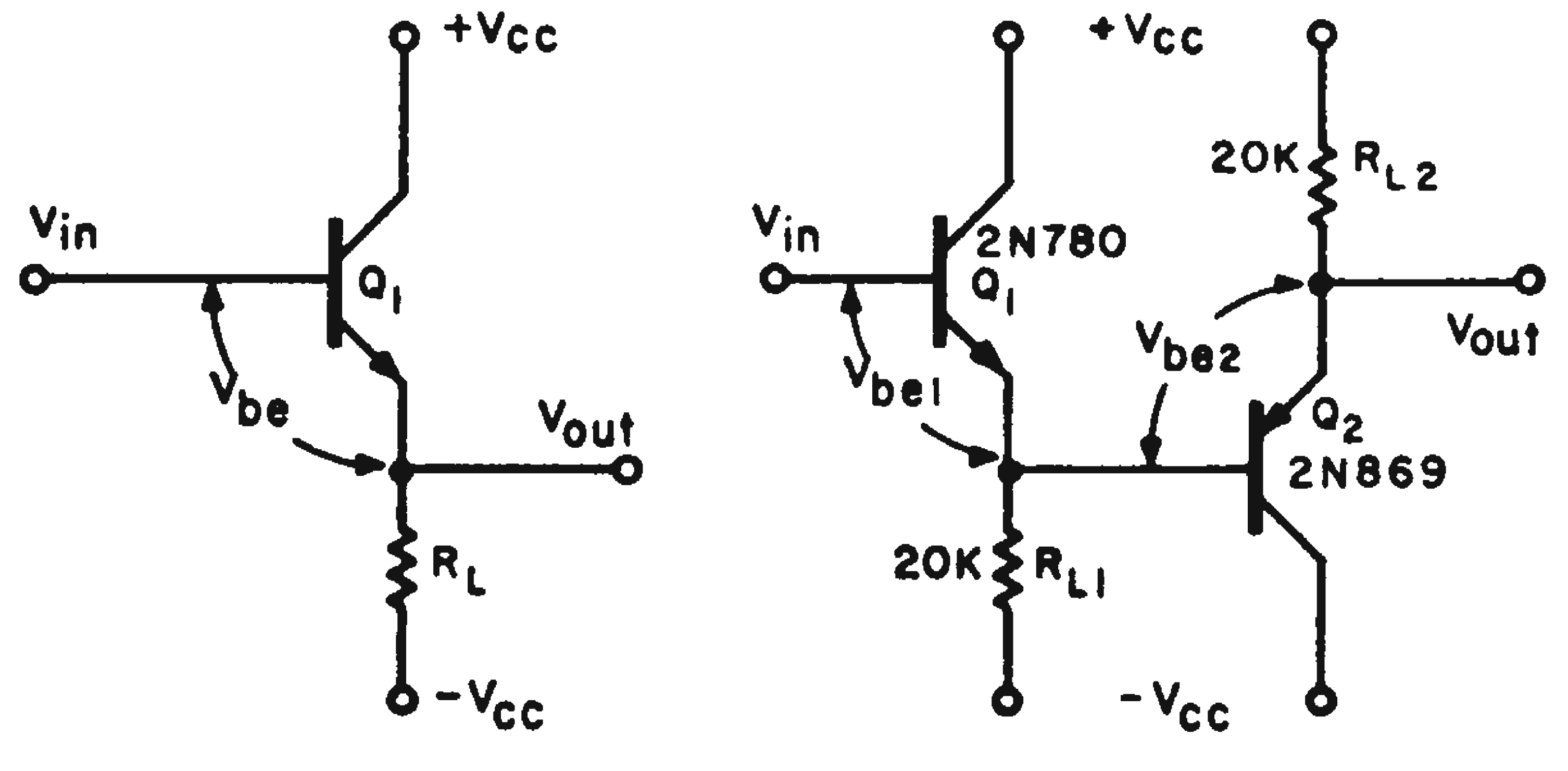

(a) (b)

Fig. 1. Basic emitter follower (a) is temperature-stabilized by addition of opposite-polarity stage (b).

The principle of operation of the temperature-stabilized emitter follower is based on the cancellation of the base-to-emitter voltage (V_{be}) of the first stage by an equal, but opposite polarity, base-to-emitter voltage in the second stage. An increase in temperature will produce a decrease in V_{be} of Q_1, tending to raise the output voltage. The V_{be} of Q_2 also will decrease but by the use of a pnp transistor, this change will tend to decrease the output voltage. The stability of the circuit is then dependent on the ability of the base-to-emitter voltage of the two transistors to track over an extended temperature range.

A series of tests has been conducted using 2N780 transistors as Q_1 and 2N869 transistors as Q_2. The maximum drift obtained over the temperature range of 20 F to + 200 F was 30 mv, with the average drift about 25 mv. The transistors used in this test were randomly selected and no attempt was made to match transistor characteristic.

M. H. Schmidt, instrumentation engineer, McDonnell Aircraft Corp., Florissant, Mo.

Voltage Comparator Uses Tunnel Diode Flip-Flop

A voltage comparator was needed to detect a 5-mv output change from the "off" to the "on" state at a frequency of 2 mc.

The voltage comparator designed for the job proved to be extremely sensitive. It used two silicon 4.7-ma peak current tunnel diodes connected as shown in the figure.

Essentially the tunnel diodes are biased as a flip-flop, one in the high conduction state, and the other in the low conduction state.

A positive pulse at the input switches the diodes to the opposite states.

The bias point is chosen so that 0.8 ma or more is required to make the diodes switch. Resistor R_1 is used to adjust the amount of switching current. This circuit was able to detect a voltage of 1 mv resolution from the "off" state to the "on" state.

As an example, assume that an output is required when the input is above +1 v.

When the input is just below 1 v the diodes do not switch; they remain at their initial bias point. As the input voltage approaches +1 v, the additional current switches the diodes. (R_1 is adjusted until the point is reached where the diodes switch.)

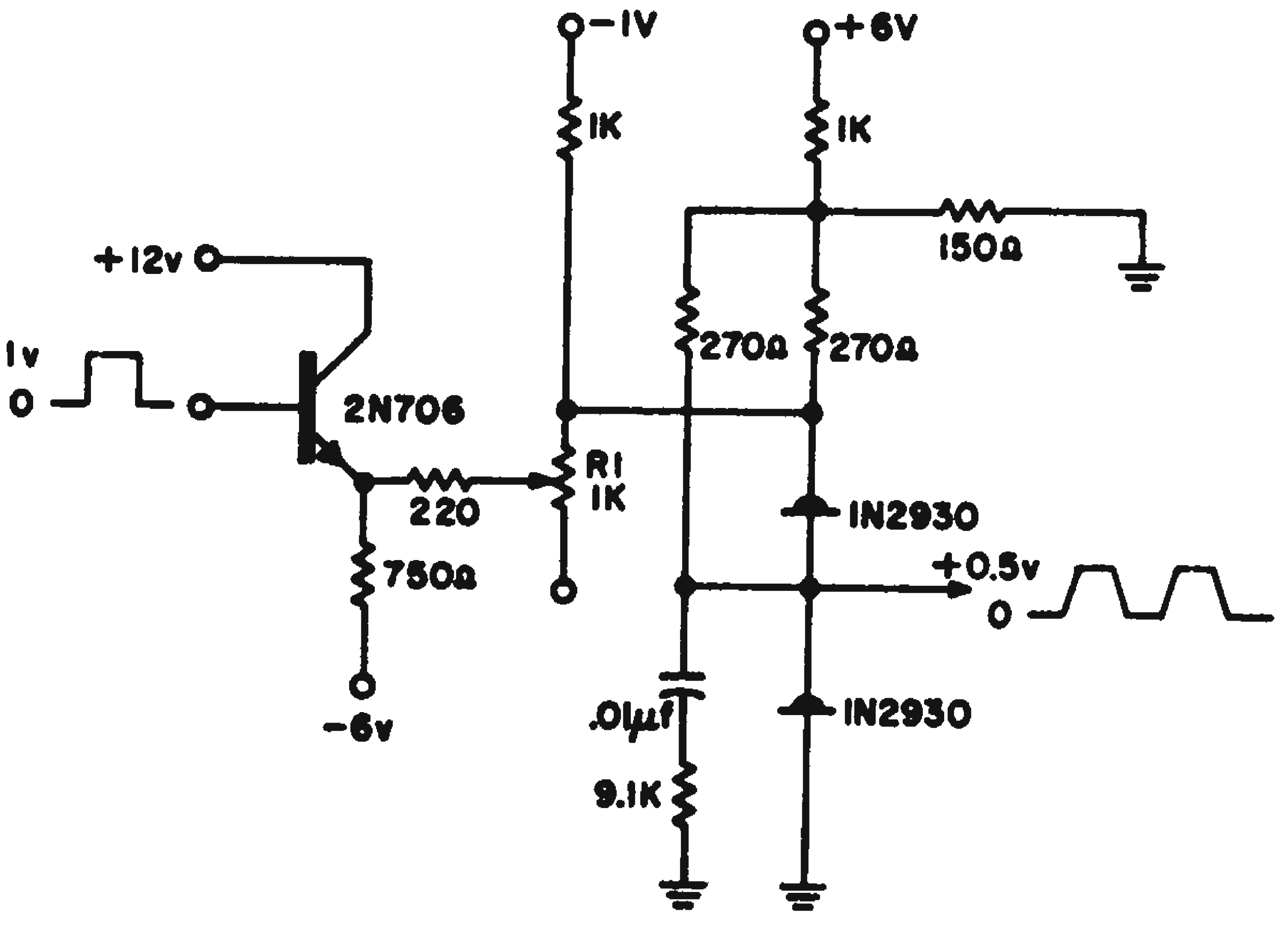

Tunnel diode voltage comparator uses diodes biased to form a flip-flop.

Nicholas Marchese, Assistant Electrical Engineer, Lockheed Electronics, Metuchen, N. J.

Microwave Mixer Diode Makes Sensitive, Broadband Video Detector

A broadband video detector of superior performance was devised, using a 1N53B microwave diode. The tests performed on this coaxial crystal verified that sensitivity in excess of —40 dbm were obtainable over the entire 20-40-kmc bandwidth, and probably well beyond. A video bandwidth of at least dc to 8 mc was also verified.

The 1N53 is a miniature point-contact coaxial microwave crystal diode designed for mixer applications at a design frequency of 34860 mc. The "B" version provides an rf bandwidth capability (for mixer applications) of about 12 per cent. This diode has also been used as a harmonic generator in the millimeter wavelength region. The cartridge construction relationship is designed to provide an input characteristic impedance of 65 ohms. Its popularity in these applications, because of cost and construction factors, makes it a very promising detector device.

Test results of video sensitivity for eight 1N53B diodes, expressed in terms of db below 1 mw for a video amplifier bandpass of dc to 8mc were tabulated. The sensitivites are in excess of —40 dbm in all cases, ranging from —40.3 to —48.5. For such a broad rf bandwidth, these results compare favorably to advertised sensitivities of video diodes that operate in this frequency range. The 1N446 diode, for example, is specified by the crystal manufacturer as a video diode for the 26.5 kmc to 40 kmc range with a minimum sensitivity of —40 dbm.

The test results reported here do not indicate that the upper and lower rf frequency performance limits of the 1N53B as a video detector have been defined. The response at both frequency extremes indicates that this diode is still displaying good response. Hence, the rf bandwidth capability of the 1N53B diode is greater than reported in this paper.

Fig. 1 is a schematic diagram of the test setup used to verify the crystal's detector capability.

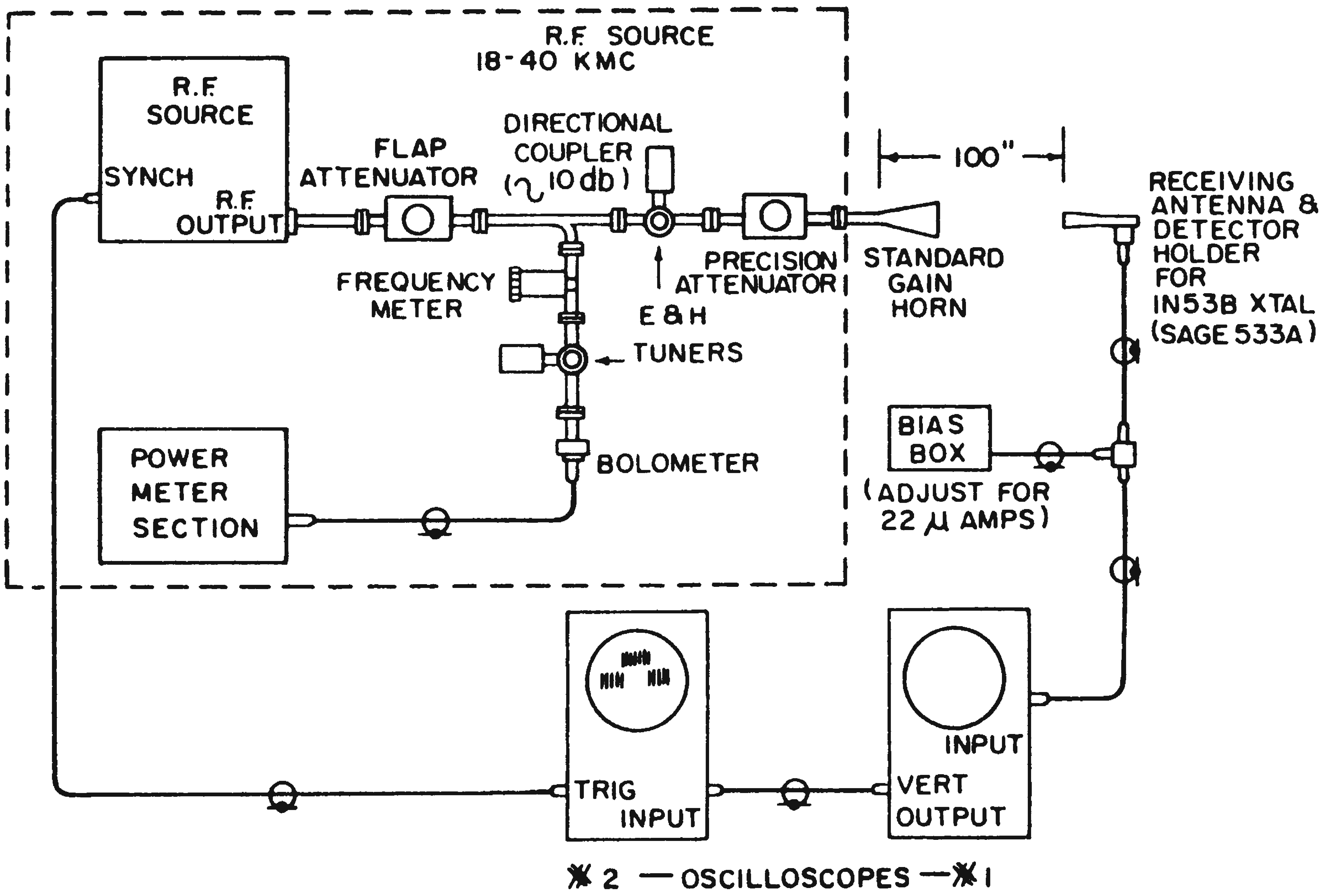

Fig. 1. Test set-up verified bandwidth and detection sensitivity of microwave crystal.

Since a single commercial waveguide crystal holder, as such, did not exist that would accept the cartridge construction of the 1N53B for the entire 20-kmc—40-kmc frequency spectrum, a broadband horn antenna and detector holder assembly was chosen. This unit, a Sage Laboratories Type 533A, provided the necessary crystal holder probe to accomplish the transformation of the waveguide impedance to a coaxial line impedance of 65 ohms to "match" the crystal. No tuning of this unit is necessary to cover the frequency band.

Separate tests were conducted on this unit to determine its effective aperture in order that power density level measurements obtained at the aperture plane of the antenna could be directly related to diode sensitivities. The effective aperture was determined to be about 0.62 cm^2.

An anechoic chamber, suitably lined with rf absorbing material, was selected as the test site. The rf signal generator used was custom-designed, capable of an rf output of at least 1 mw in the 18-kmc—40-kmc frequency spectrum. This unit also contained, as an integrated assembly, the waveguide plumbing, precision and flap attenuators, directional couplers, frequency meters, and a power monitoring bridge. This integrated assembly permits a known rf output power to be set up at the selected frequency. Standard horn type antennas, with 0.85-cm and 1.25-cm optimum[1] gain were used. These were fabricated in accordance with NRL design data.[2] The horns have known gains with accuracies of about ±0.5 db. The transmitting and receiving antennas were boresighted in the test set-up alignment.

The sensitvity measurements were performed with 22 μa of forward dc bias applied to the diode. During the tests, it was noted that bias appeared to have an adverse effect on some of the diodes. On those diodes affected, a significant increase in the signal-to-noise ratio was observed with a resulting loss of diode sensitivity of about 2 or 3 db.

A transmitting test distance of 100 in. was used for all measurements. This distance was determined to be outside the Fresnel Zone as defined by the following equation:

$$\text{Fresnel Zone} = \frac{2A^2}{\lambda}$$

Where:

A = longest lines dimension of the largest antenna used.
λ = free space wavelength.

The 100-in. distance was measured from the throat[3] of the optimum gain transmitting horn to the aperture plane of the Sage 533A receiving antenna.

The "Tangential Signal" was used[4] as the measurement level criteria, since tangential signal measurements may be repeated by various operators within ±1 db. The power density level that produced a tangential signal presentation on oscilloscope 2 (see Fig. 1) was determined at the aperture plane of the receiving antenna by the following formula:

$$Pd = \frac{Pt \cdot Gt}{4\pi \cdot d^2}$$

where Pd = power density level in mw/cm^2
Gt = numerical gain of transmitting antenna
Pt = power transmitted in mw
d = distance between throat of transmitting antenna and the aperture plane of the receiving antenna in cm.

The diode sensitivity was determined by multiplying the power density level (in mw/cm^2) by the effective aperture of the Sage 533A unit (0.62 cm^2) to give sensitivity in milliwatts. This sensitivity is more usually expressed in db below 1 mw. In reporting video diode measurements it is necessary to define the bandpass of the video amplifier used. This will permit others to determine the sensitivity that may be expected of the diode in their particular systems. The curve shown in Fig. 2 is a plot of relative video diode response versus amplifier bandpass and may be used to convert sensitivities reported in this paper to expected sensitivities at any other amplifier bandpass. The amplifiers employed in these tests were Tektronix oscilloscope types with a measured bandpass of dc-8 mc.

---

[1] An optimum horn has aperture dimensions chosen to give maximum gain when the slant height is held fixed.

[2] "Design and Calibration of Microwave Gain Standards," by W. T. Slayton, NRL Report No. 4433, November 1954.

[3] The "throat" is readily determined for an optimum gain horn and is at the position where the horn flares into the waveguide section.

[4] The "Minimum Detectable Signal" level exists when the presence of the signal can just be detected in the noise level. This measurement level is subject to large variations in obtained results when performed by different operators due to the difficulty of determining the signal presence when its location along the oscilloscope trace is not known.

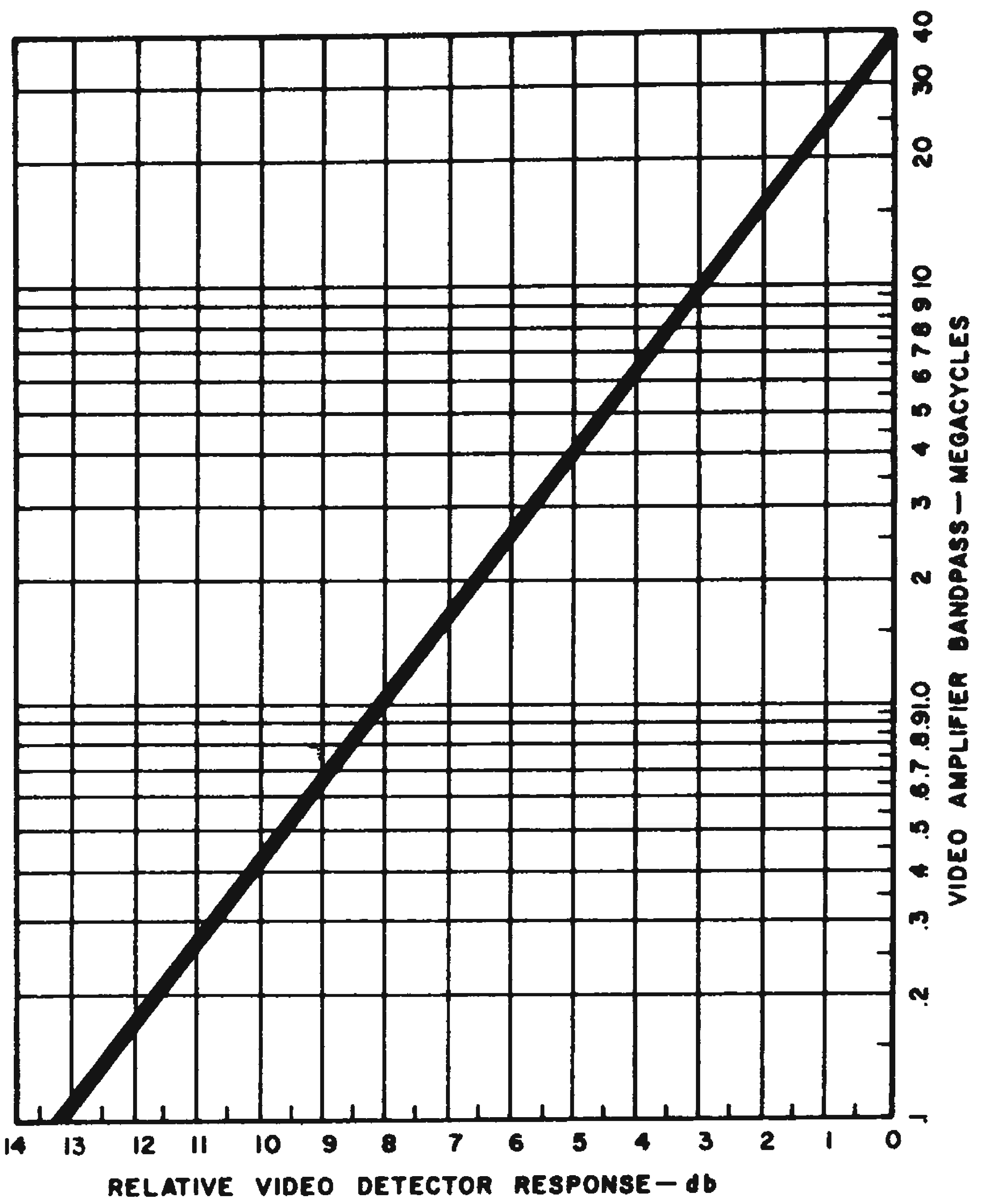

Fig. 2. Chart for converting sensitivity obtained in test to results to be expected for other amplifier bandpasses.

Sources of Error

The possible sources of error in the measurements reported are as follows:

Source	Possible Error
operator—in reading a tangential signal level.	±1.0 db.
directional coupler	±0.5 db.
precision attenuator	±0.5 db.
power bridge	±0.5 db.
standard gain horn	±0.5 db.
	Total ±3.0 db.

R. L. Thomas, Design Engineer, Reseda, Calif.

Fabrication From Plastic Clay Speeds Microwave Matching

In the matching of various microwave components, it is often necessary to optimize the matching structure used by a "cut and try" process. Since each "try" involves a machining operation, the matching process can be very time consuming.

If, however, the matching structure is shaped from plastic clay, inserted in the waveguide component, and quick drying silver paint applied to it, the clay structure will effectively simulate a metallic matching structure. When a clay structure is found that is approximately correct, a permanent metallic duplicate can be fabricated.

The plastic clay used was "Plasticine" made by Harbutt's Plasticine Ltd., Bath, England. The silver paint was Silver Paint No. 378, made by Handy and Harmon, 82 Fulton St., New York 38, N. Y.

E. Kramer, Senior Electronic Engineer, Emerson Research Laboratories, Silver Spring, Md.

Klystron Is Switched Off, But Remains On To Avoid Cooling

Turning a klystron off by switching its repeller voltage to a value outside of the operating mode can keep the tube from cooling down during off periods required for equipment adjustment.

When a low power klystron is used in the general run of laboratory microwave measurements, it often is necessary to turn the klystron off momentarily (for example, while zeroing a power meter). The usual klystron power supply has a switch which performs this function by turning off the beam supply.

However, this method can be undesirable because the klystron cools during the off period, and takes some time to re-establish its equilibrium when it is turned on again.

The circuit shown switches the klystron's repeller voltage off mode, thus reducing its output to zero. But, since low power klystrons are generally inefficient, the non-oscillating beam current is almost equal to the oscillating beam current. The result is that the klystron stays at essentially the same temperature both on and off.

The circuit consists of a potentiometer connected across the repeller supply. The total resistance ($R_1 + R_2 + R_3$) should be large enough not to exceed the current capability of the repeller supply. The resistors R_1, R_2 and R_3 should be chosen so that the potentiometer arm voltage lies between two klystron modes.

To operate the circuit, set the switch in position *A* and adjust the klystron repeller supply to give maximum klystron output power (peak of the power mode). Next, turn the switch to position *B*

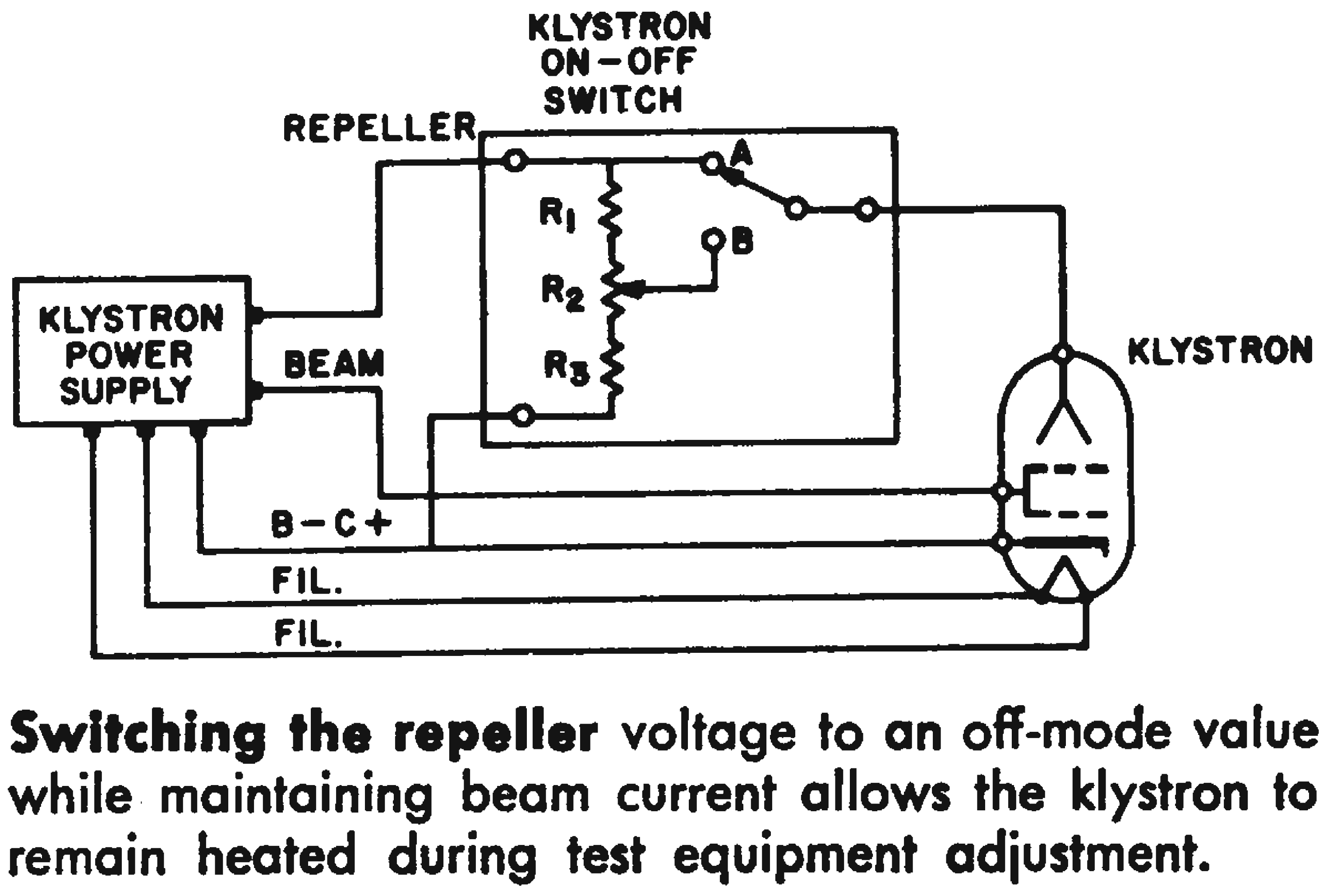

Switching the repeller voltage to an off-mode value while maintaining beam current allows the klystron to remain heated during test equipment adjustment.

and adjust R_8 until there is no power output (operation is off the power mode). The klystron can now be turned on and off by throwing the switch back and forth.

Emanuel Kramer, Senior Engineer, Emertron, Inc., Silver Springs, Md.

Meter Relays Protect Travelling Wave Tubes

We have used meter-relays in two applications to prevent electrical damage to traveling wave tubes. The circuit in Fig. 1 is used to prevent helix burn-out due to excessive helix current. Fig. 2 prevents electron gun damage due to electron beam de-focusing caused by improper solenoid magnetizing current.

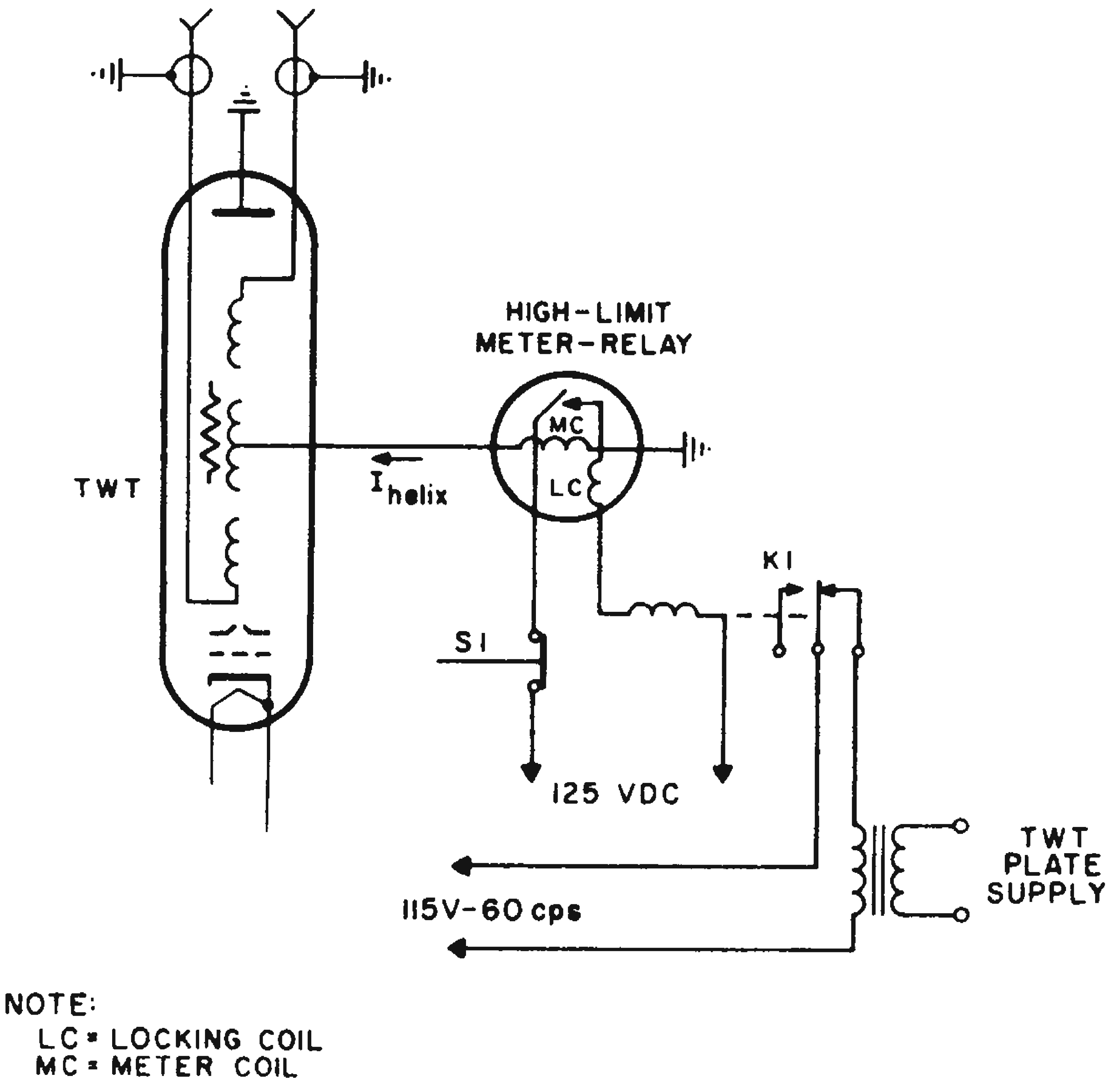

Fig. 1. A high-limit meter-relay protects a TWT from helix burn-out due to excessive helix current.

Fig. 1 uses a high-limit meter-relay. The meter movement is placed in series with the helix and ground. Excessive helix current (maximum helix current for the tube type) will cause the meter-relay to lock closed, energizing the load relay *K*1. Energizing *K*1 removes the primary power from the high voltage TWT supply. Switch S1 in series with the locking circuit is used to clear the meter-relay circuit when the fault has been corrected.

Fig. 2 uses a high-low limit meter-relay. The meter movement is in series with the current regulated solenoid supply and the TWT solenoid. The limits are set to within 15% of the recommended solenoid currents. Should the current exceed the specified limits, the meter-relay will lock closed, energizing *K*1. This removes the high voltage TWT supply.

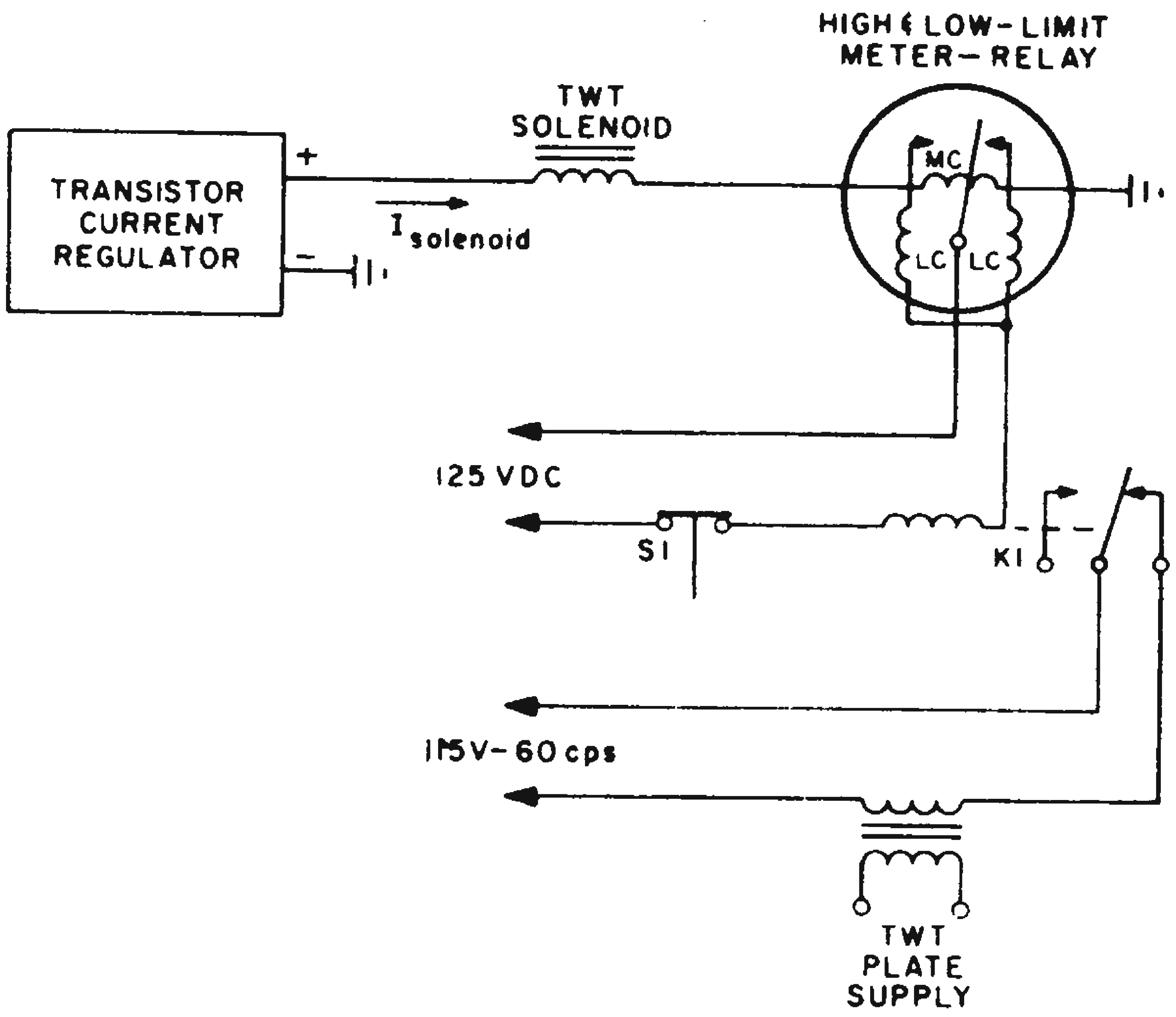

Fig. 2. A high-low limit meter-relay prevents electron gun damage caused by improper solenoid magnetizing current.

In both circuits high voltage is kept off the TWT's until the circuit is manually cleared by pushing push-button switch S1.

Walter W. Frey, Radar Systems, Airborne Instruments Laboratory, a Division of Cutler-Hammer, Inc., Huntington, N. Y.

Woods Metal Good For Plugging Plumbing

Corrobend, or Woods Metal, a fusible alloy which melts at 160 F may be used in the experimental laboratory as an easily worked material for making adjustable shorts or plugs in waveguide, cavities, etc. It gives a good mechanical and electrical fit and is easy to insert and remove.

A minimum of tools are required, only a source of heat 150 to 200 F to melt the alloy in place. There is no danger of damage to the parts from excessive heat or mechanical stress, as might occur when using machined brass or aluminum plugs.

There are probably many ways in which this "liquid" technique could be used. One very satisfactory use is that of an easily adjusted short in crystal mounts or transitions. By adding to, or drilling out the material, and remelting, tolerances of 0.002 in. are easily obtained.

J. D. Stewart, National Research Council, Radio & Electrical Engineering Div., Ottawa, Canada.

Antenna-Matching Transformer Keeps VSWR Low Over Wide Band

Using a microstrip and/or a shielded stripline transmission system, a tapered, impedance matching transformer was designed to match a wide-band antenna to a 50-ohm line. With the low frequency limit at about 200 mc, the 188-ohm antenna was matched over a 40 to 1 frequency bandwidth. Over the entire range the vswr was less than 2 to 1.

Because it is tapered in width, the transformer, Fig 1, has characteristics impedance, Z_o, gradually changed from 50 ohms at the feed-line to 188 ohms at the antenna terminals. This impedance change occurs with either a microstrip line—a wide, flat conductor separated from a narrow conductor by a dielectric—or a shielded stripline. The solid dielectric used was Teflon fiberglass.

About halfway along its length, the transformer has an abrupt change in its cross section. At this point, the solid dielectric strip, Fig. 1b, is replaced by an initially wider strip. The dielectric of this new section is part solid and part air. In this "air" strip, Fig. 1a, almost 90 per cent of the Teflon between the conductors is removed. This transition is made because, for a given strip width, the air dielectric section has a higher characteristic impedance, Fig. 2. The lower impedance of the solid section makes it a more practical choice

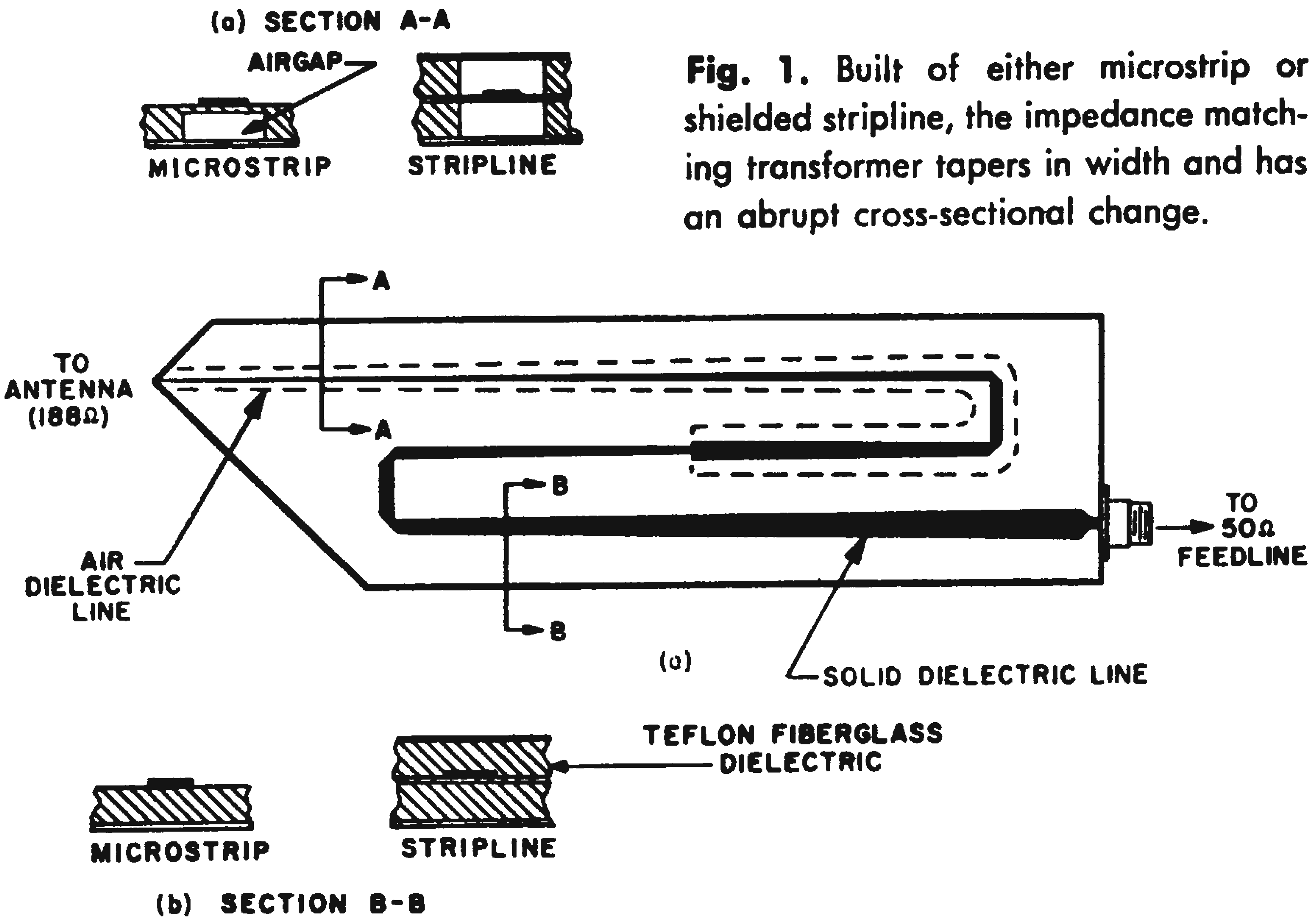

Fig. 1. Built of either microstrip or shielded stripline, the impedance matching transformer tapers in width and has an abrupt cross-sectional change.

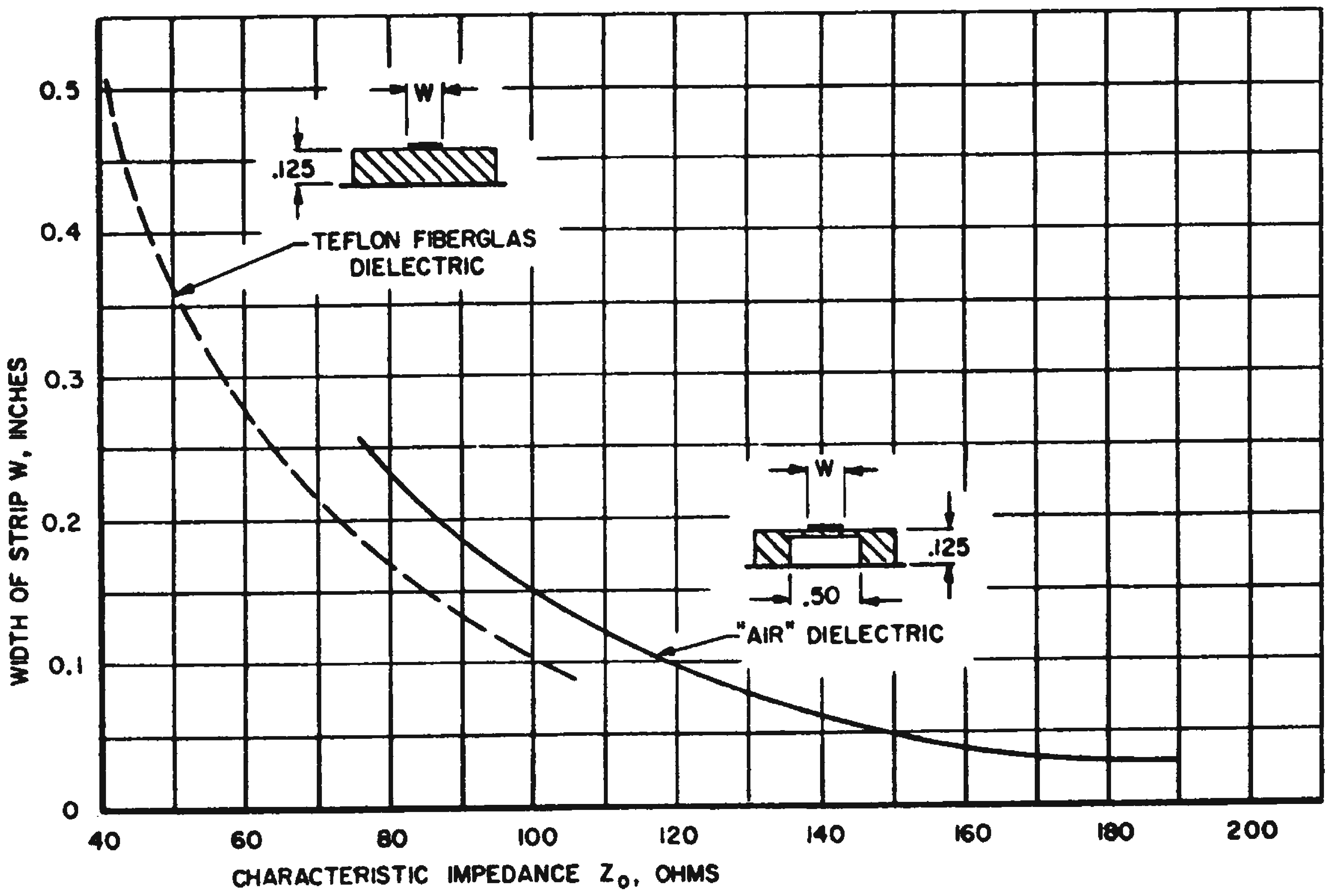

Fig. 2. The characteristic impedance variation with strip width is shown for a microstrip-line. One curve is for a sold dielectric cross section; the other for an "air" dielectric cross section.

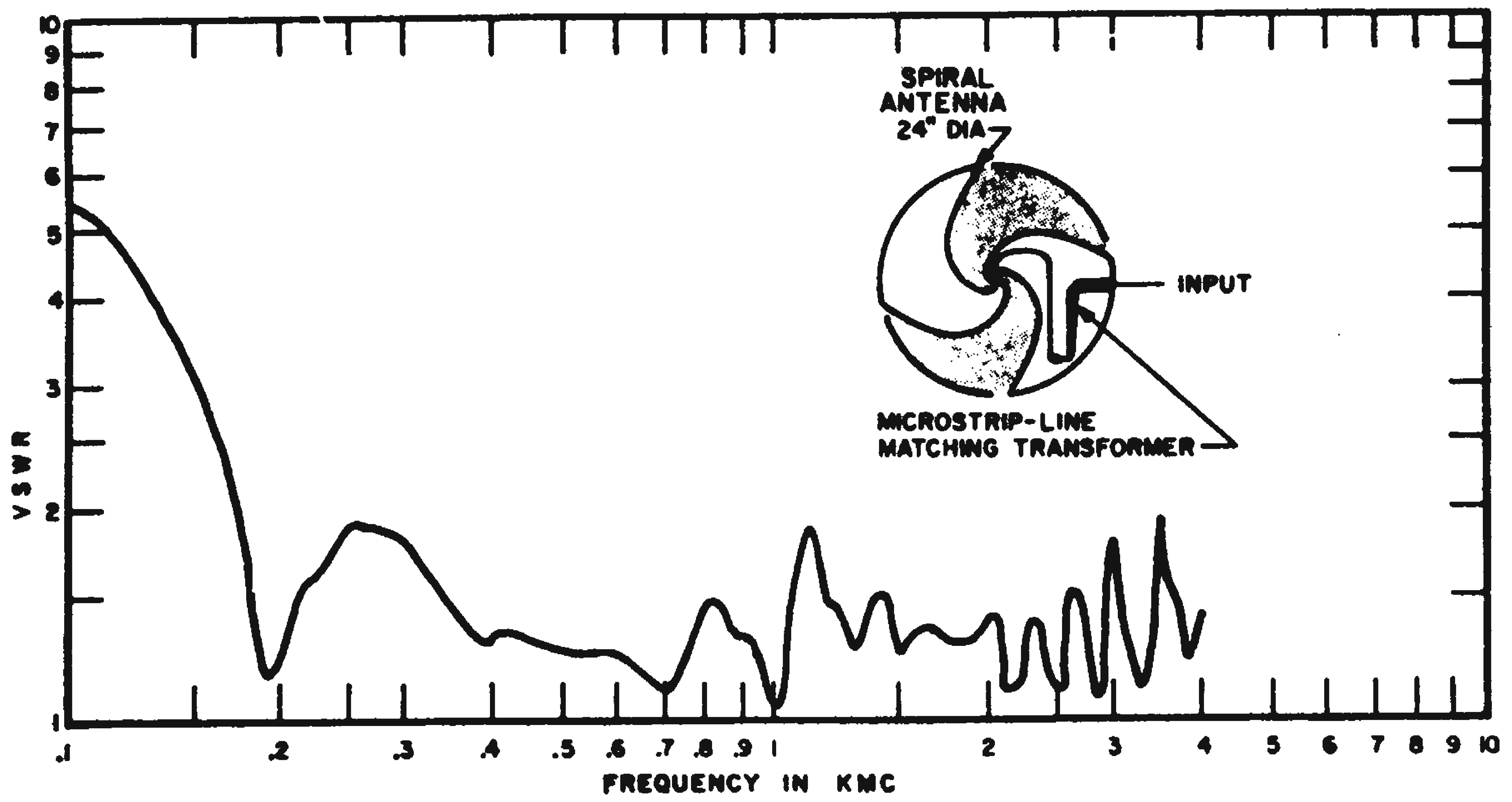

Fig. 3. (a) For an equiangular spiral antenna matched with a microstrip impedance matching transformer, the vswr is less than 2 to 1 from 175 mc to 4000 mc. (b) Inset shows the placement of the transformer within the antenna boundary.

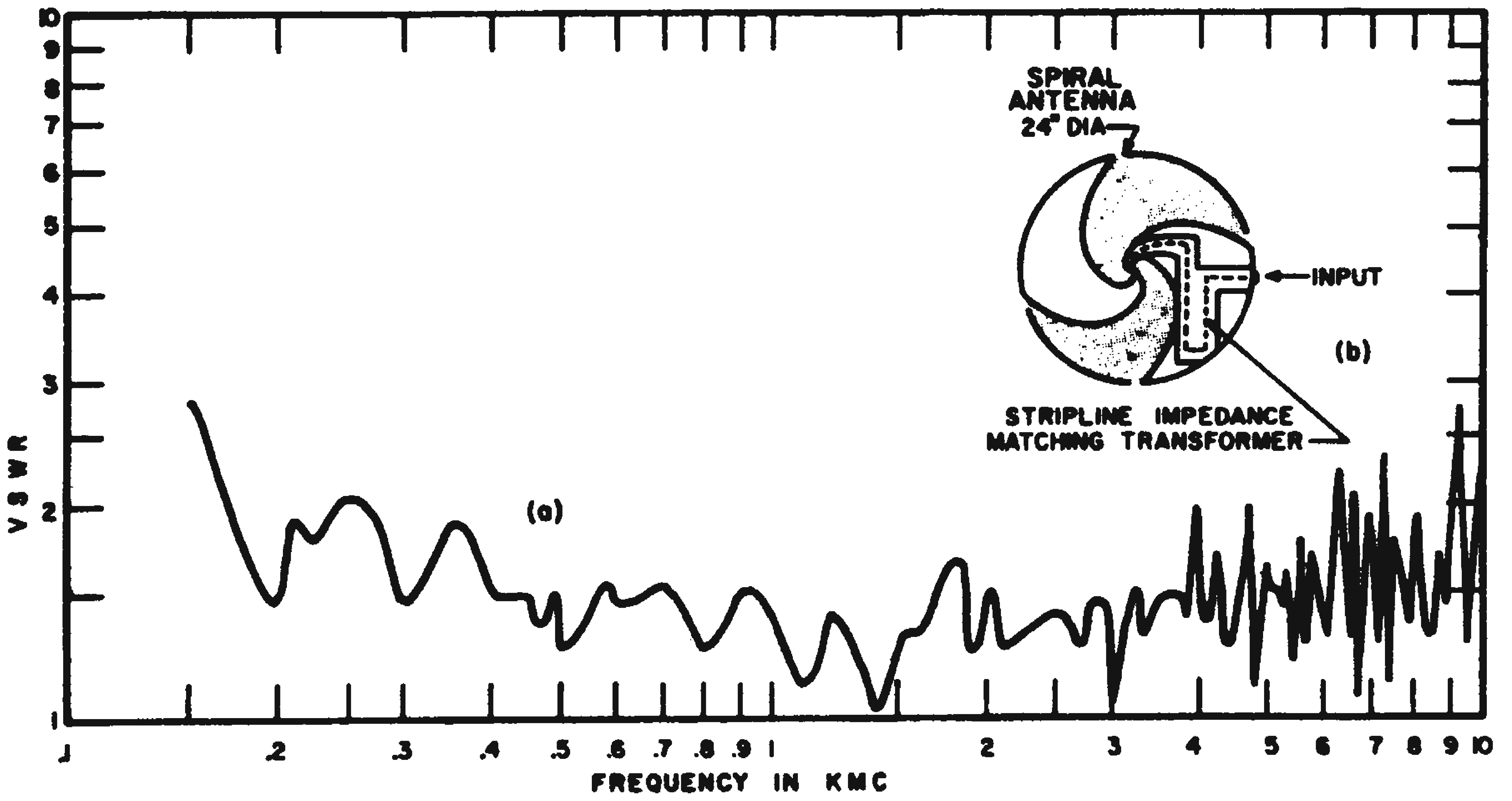

Fig. 4. (a) Matching the spiral antenna with a shielded stripline transformer yields vswr's less than 2 to 1 from 180 mc up to 8000 mc. (b) Again, the transformer was placed entirely within the antenna boundary.

at the 50-ohm termination. At this impedance, its strip width could be narrower than if an air section were used. However, at the higher impedance end, the solid section would have to be far too narrow. For this reason, the transformer cross-section is changed from the solid to a solid and air dielectric.

The tapered transformers were mounted on a 24-in. planar, equi-angular, spiral antenna. The antenna's apex height was 12.4 in. For the vswr, at 200 mc to be within 2 to 1, the transformer length had to be 30 in.

The measured vswr for the microstrip transformer-antenna combination, Fig. 3a, was less than 2 to 1 from 175 mc to 4000 mc.

With the stripline transformer feeding the antenna, and with the upper test frequency limit extended, the vswr, Fig. 4, was less than 2 to 1 up to about 8000 mc.

Low vswr values were also obtained with a shielded stripline matching transformer connected to a fin antenna.

Howard E. King, Space Technology Laboratories, Inc., Los Angeles, Calif.

LC Ringing Circuit Sharpens Oscillator Trigger Points

The repetition frequency of blocking oscillators and multivibrators can be made much more stable by adding an LC ringing circuit as shown in the schematics, Fig. 1.

Frequency instability in these circuits is often due to the exponential decay curve used for timing. At the triggering level, the slope of this curve, Fig. 2, is not always great enough to give a sharp, stable trigger point. The LC combination in series with the RC timing circuit yields a timing curve where sinusoidal oscillations are superimposed on the exponential decay. If the time constants are suitably chosen, the resulting curve will cross the trigger level at a steep, clear-cut angle. The triggering point will be sharper and better defined, thus leading to more stable circuit operation. *Roy P. Foerster, Group Engineer, The Martin Co., Baltimore, Md.*

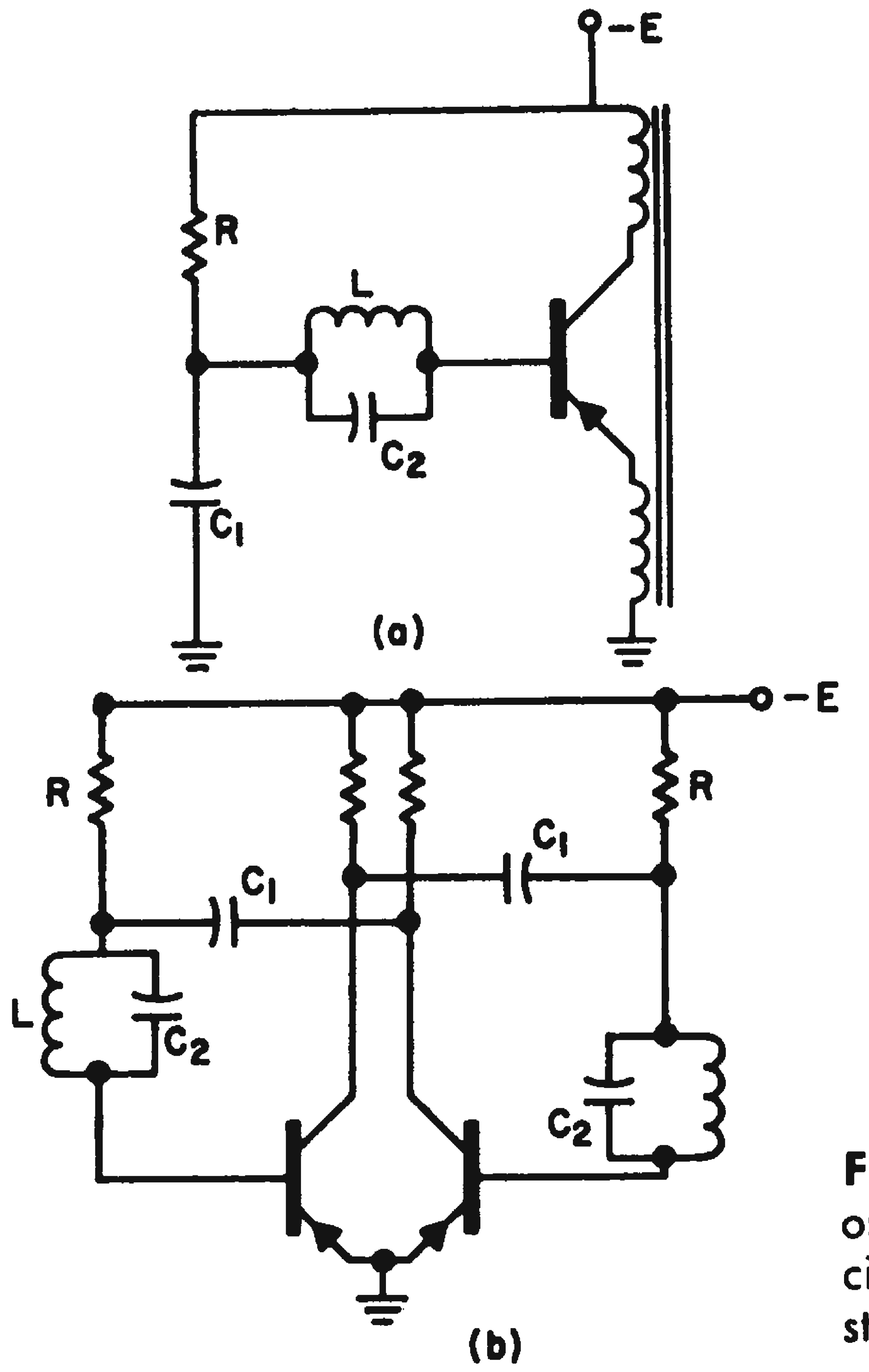

Fig. 1. An LC ringing circuit added to a (a) blocking oscillator and (b) multivibrator helps to stabilize the circuit triggering points and leads to greater frequency stability.

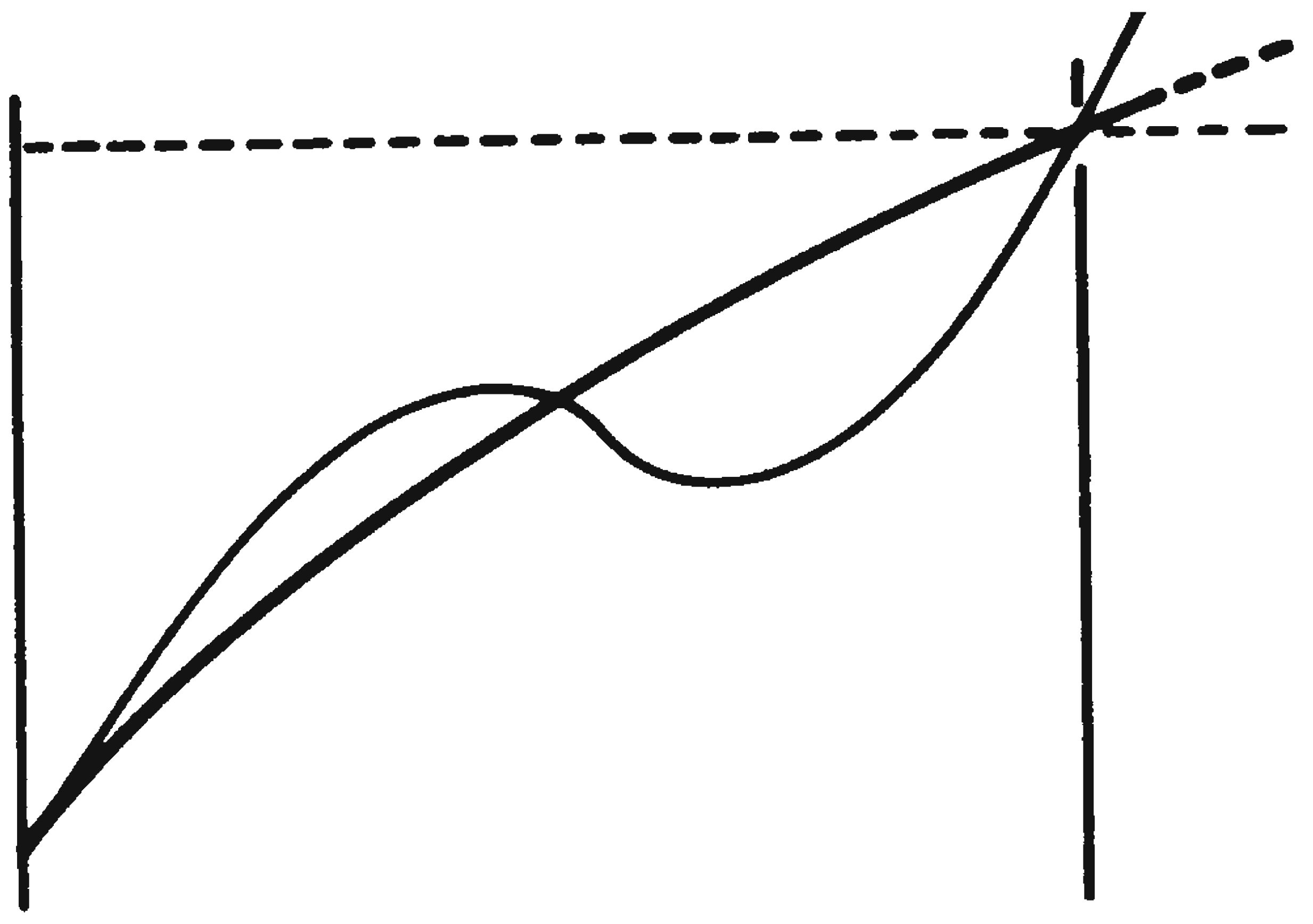

Fig. 2. The oscillations of the LC combination, superimposed on the exponential timing curve, cross the trigger level at a steep angle. Thus, the triggering point is sharp and clearly defined.

Tunnel Diode Doubles Doubled Frequency

Our need was for a simple untuned circuit which would give a timing wave at four times the frequency of a stable input signal. The tunnel diode circuit shown in the figure satisfied the requirement.

The germanium diode bridge rectifier (D_1-D_2-D_3-D_4) gives two positive output pulses (waveform *B*) for each input-signal cycle (waveform *A*). This dc output is stepped down and applied to the tunnel diode (D_5) from the low-resistance leg (R_2) of the voltage divider. Each positive pulse swings the tunnel diode through the positive- and negative-resistance portions of its characteristic, giving the output waveform *C* (four positive pulses).

With the aid of an oscilloscope connected to the circuit output terminals, the input signal voltage is set to the point between zero and 5 v rms (varies with tunnel diodes) which gives the best output-pulse waveform. The circuit operates up to several megacycles.

Rufus P. Turner, Consulting Engineer, Los Angeles, Calif.

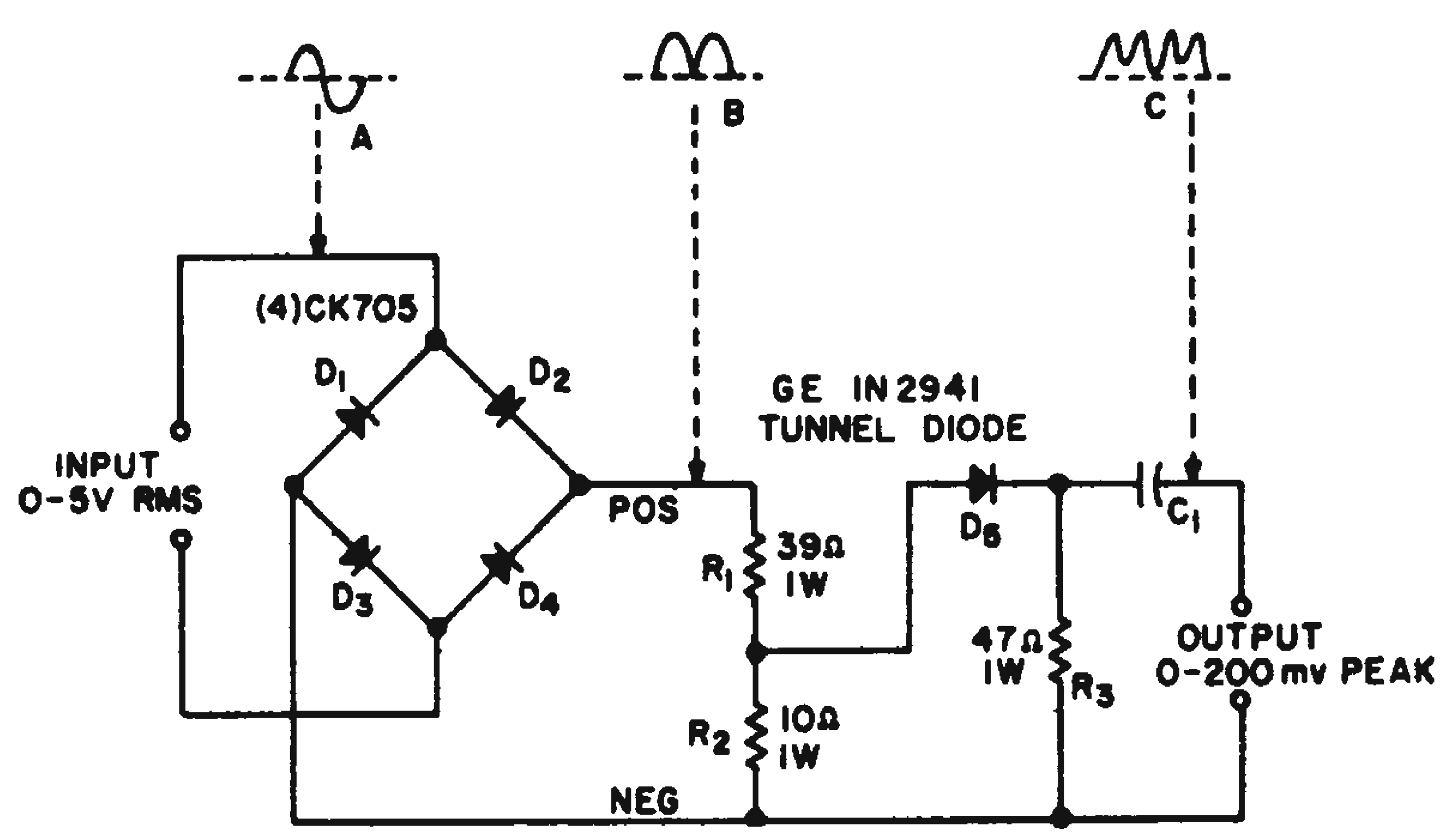

Frequency quadrupler uses tunnel diode to double the frequency at the output of a bridge rectifier which doubles the input frequency.

Simple Transistor Oscillator For 5 to 50 mc. Frequency Range

The oscillator shown in Fig. 1 is a negative-resistance emitter follower oscillator with a tank in the base circuit.

This circuit has good driving ability and is adequately stable for many oscillator requirements. The voltages and load resistor are not critical, but care should be taken not to exceed the rating of the transistor selected.

Although the circuit works best with only an inductor, as shown, a small variable capacitor may be used in parallel with the inductor as a convenient means of varying the frequency. It was found that the oscillator was adequate for frequencies between 5 and 50 mc. Fig. 2 may be used as a guide in selecting an inductance to obtain a desired frequency.

All high frequency transistors tried have worked successfully; those tried were: 2N504, 2N501, 2N393, 2N345 and 2N240. Different types of

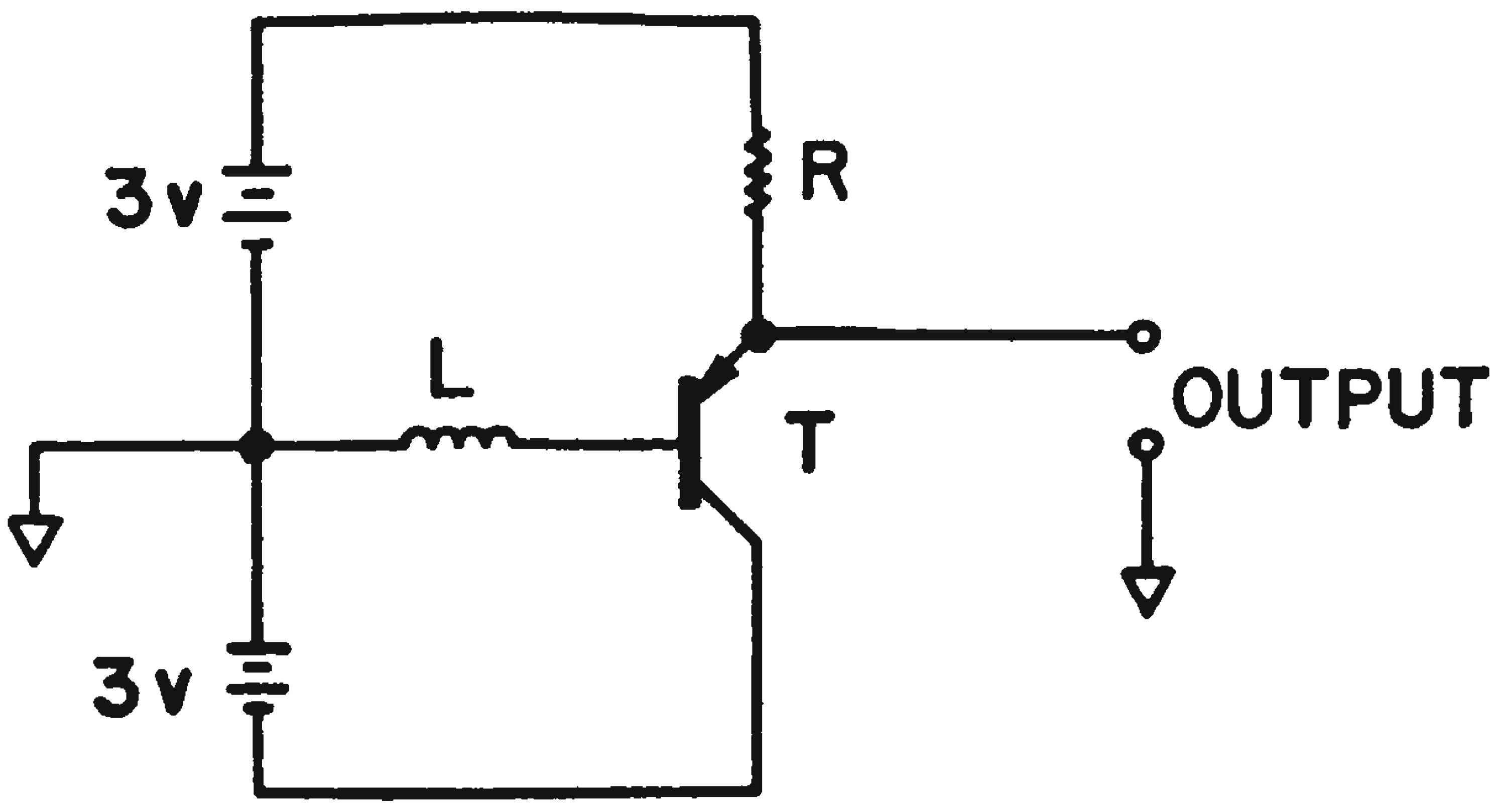

Fig. 1. A simple, emitter follower oscillator with a tank in the base circuit.

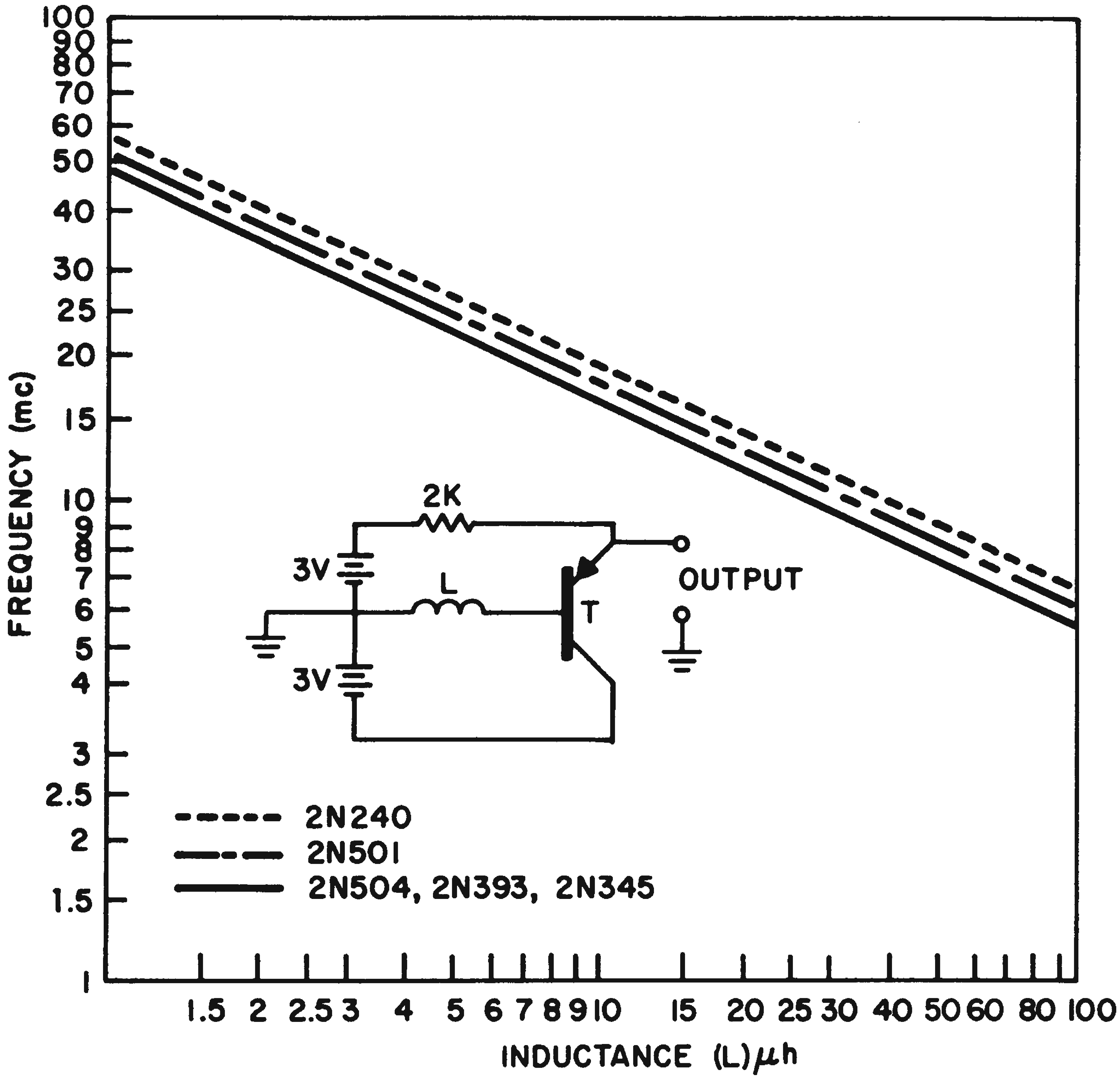

Fig. 2. This design chart can be used in selecting an inductance to obain a desired frequency. The curves have been experimentally determined for five different transistor types.

transistors give slight changes in frequency as indicated in Fig. 2.

Forrest Salter, Electronics Div., Argonne National Laboratory, operated by the University of Chicago, Box 299, Lemont, Ill.

RC Pairs Provide VFO With Quadrature Outputs

Two simple and easily built circuits were devised for obtaining accurate quadrature outputs from a variable frequency oscillator. The same negative feedback amplifier, Fig. 1, having a large open loop gain and with a tungsten lamp agc, was used in each circuit.

The first scheme, Fig. 2, uses two capacitors and two variable resistors to form a modified Wien Bridge selective network. This network provides a positive feedback loop around the circuit of Fig. 1. Two RC sections would provide only zero and —45 deg outputs. Hence a third RC section is used to obtain a +45-deg output. The voltage amplitude and phase at each output point are indicated on the figure. Note that the feedback amplifier is adjusted for a gain of 3. For equal amplitudes, the outputs must be amplified through identical amplifiers, to maintain the exact 90 deg phase difference, with gains in the ratio of 3 to 2.

The second scheme, Fig. 3, uses four resistor-capacitor pairs, but it provides two outputs at angles of +90 deg and —90 deg from a reference signal. The amplifier must now have a gain of 9. Again, for equal amplitudes, the outputs must be amplified through identical amplifiers having the proper gain ratios.

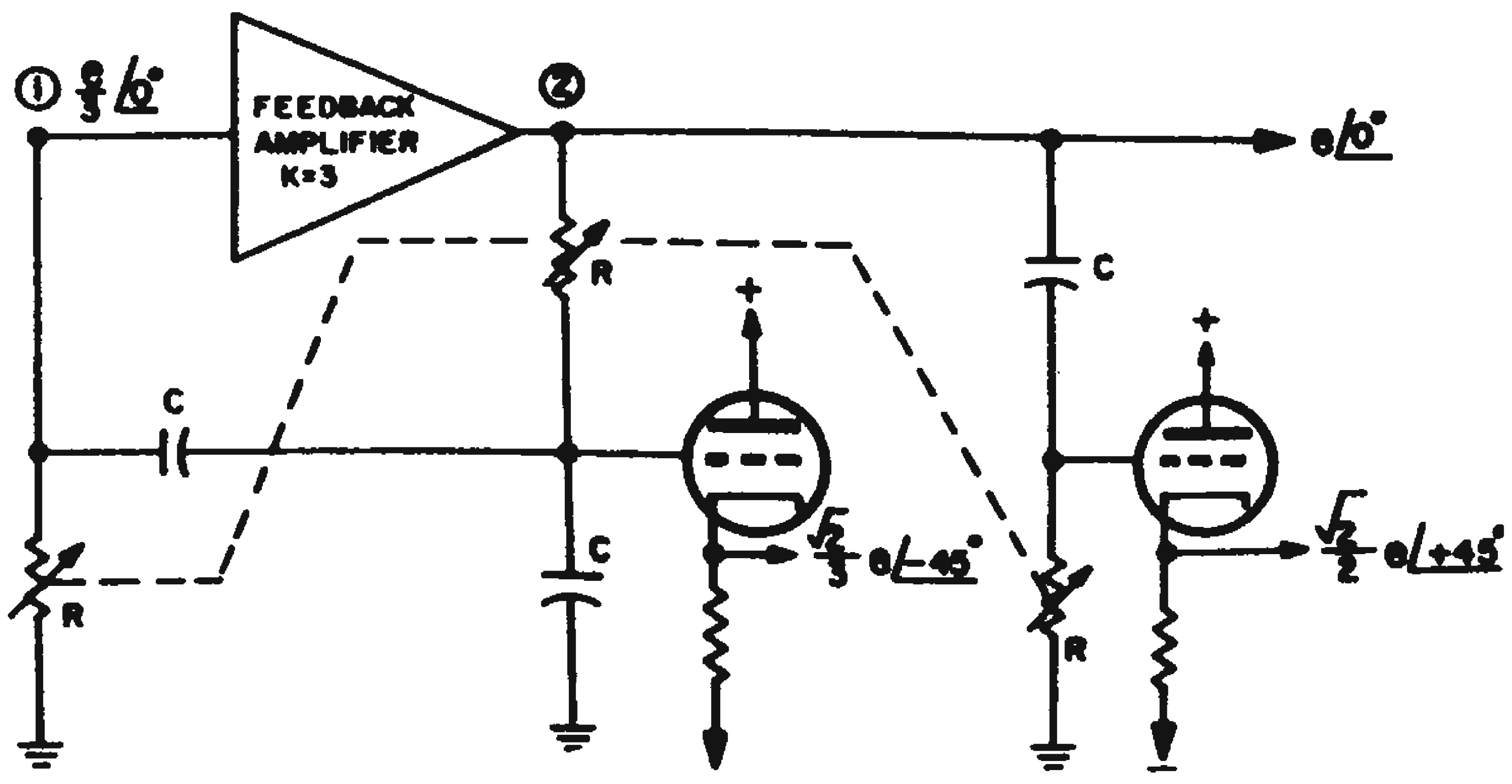

Fig. 2. A modified Wien Bridge arrangement provides the frequency selection. The third RC section is necessary for the +45 deg output.

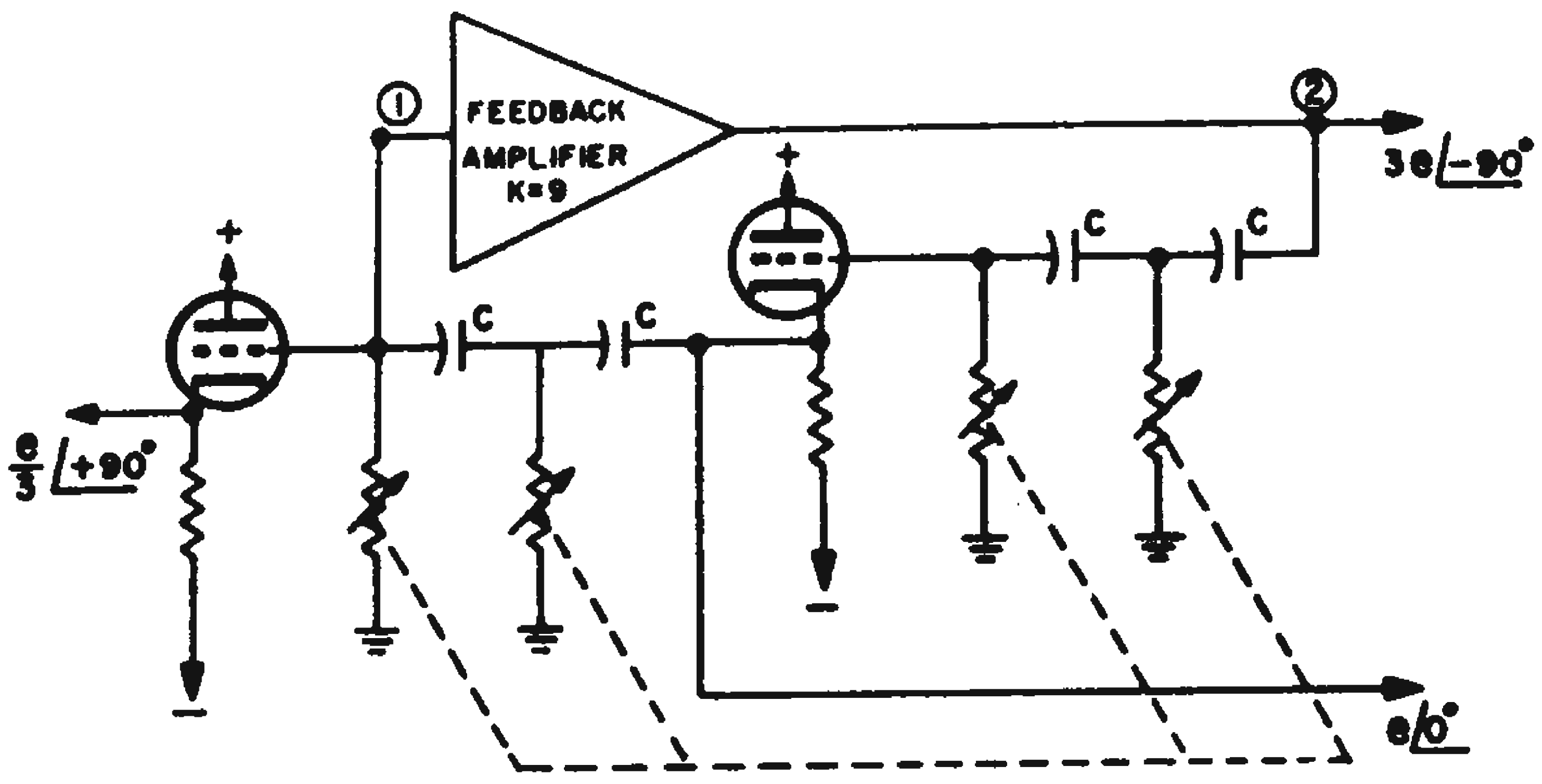

Fig. 3. Four RC pairs provide outputs at ±90 deg from a reference, 0 deg, signal.

In either scheme, the relative position of the capacitors and resistors can be interchanged, if it is convenient. The oscillation frequency will still be $\frac{1}{2\pi RC}$

For a frequency range of 2.5 kc to 31.8 kc, capacitor C was 1000 μμf, ±1%. Variable resistors R were ganged precision potentiometers varying between 62.4 K and 5.00 K for the frequency extremes.

Sergio Bernstein-Bervery, Chief Engineer, Optimized Devices, Thornwood, N. Y.

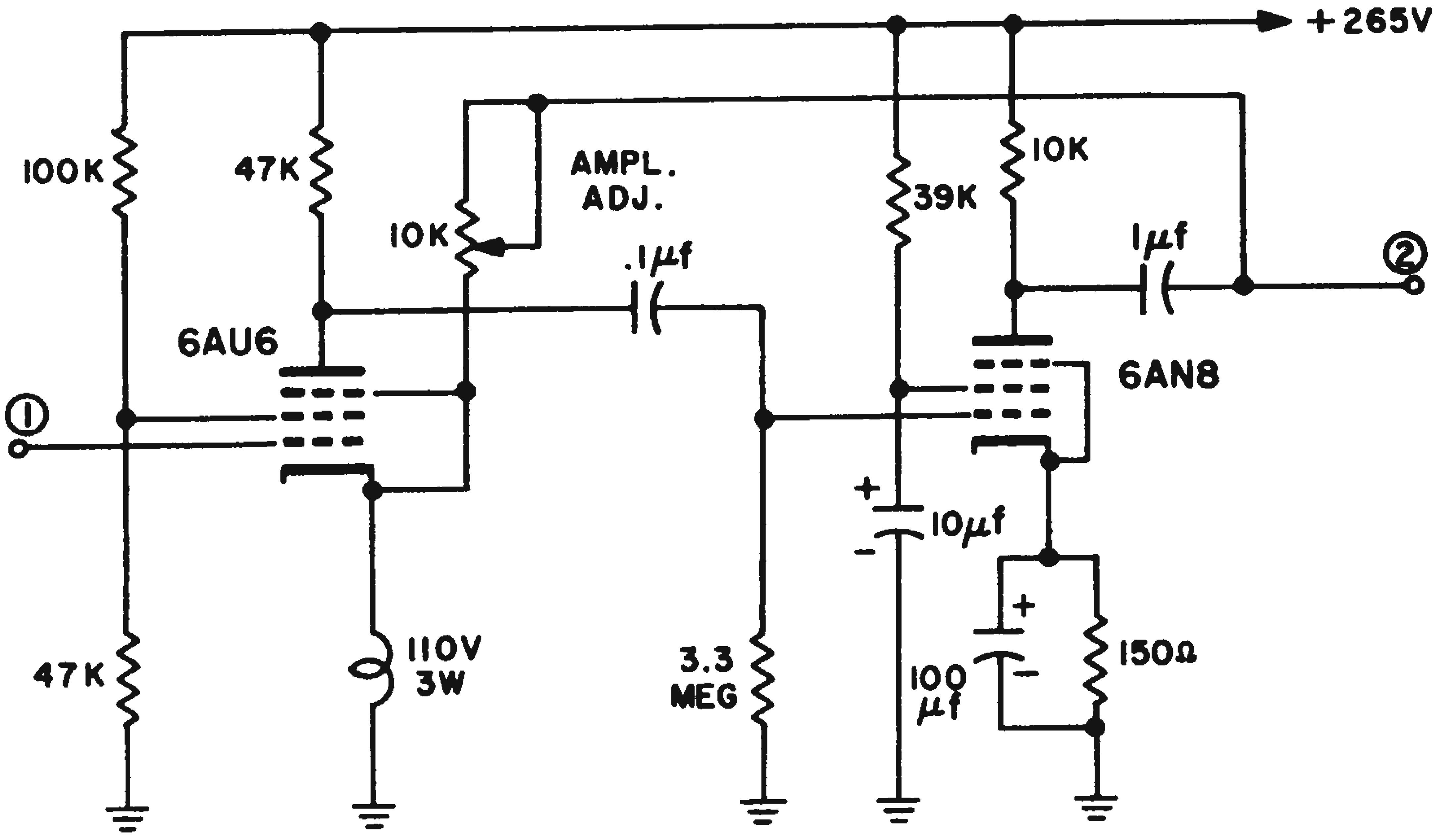

Fig. 1. This feedback amplifier is the core of a variable frequency oscillator with quadrature outputs.

Crystal Oscillator Provides Good Load Isolation

The grounded-cathode, electron-coupled, Miller oscillator shown performs very favorably when compared with the modified Pierce and TriTet electron-coupled oscillators typical of present day designs. Its plate circuit can be designed for straight-through amplifier, or for multiplier operation. Suppressor-grid shielding provides excellent load isolation.

The cathode, grid, and screen elements of the oscillator tube function as a grounded-cathode Miller oscillator. Crystal Y_1 can be of the fundamental or overtone mode type designed for antiresonant operation. One crystal terminal is at rf-ground potential, which is an advantage if crystal switching is required. The circuit capacity must tune inductor L_1 to a frequency slightly above the crystal operating frequency to satisfy the conditions for sustained oscillation. If necessary, for proper tuning, a physical capacitor can be connected in parallel with L_1.

For straight-through operation of the plate circuit, L_2 can be an rf choke and C_2 can be omitted. The output must then be capacity-coupled to the following stage. For multiplier operation of the plate circuit, L_2 and C_2 tune to the desired harmonic output frequency. Capacitive or inductive output coupling can then be used. For either straight-through or harmonic operation, electrode voltage and loading conditions must prevent the instantaneous plate voltage from dropping below the instantaneous screen voltage. Load reflections may otherwise affect frequency stability.

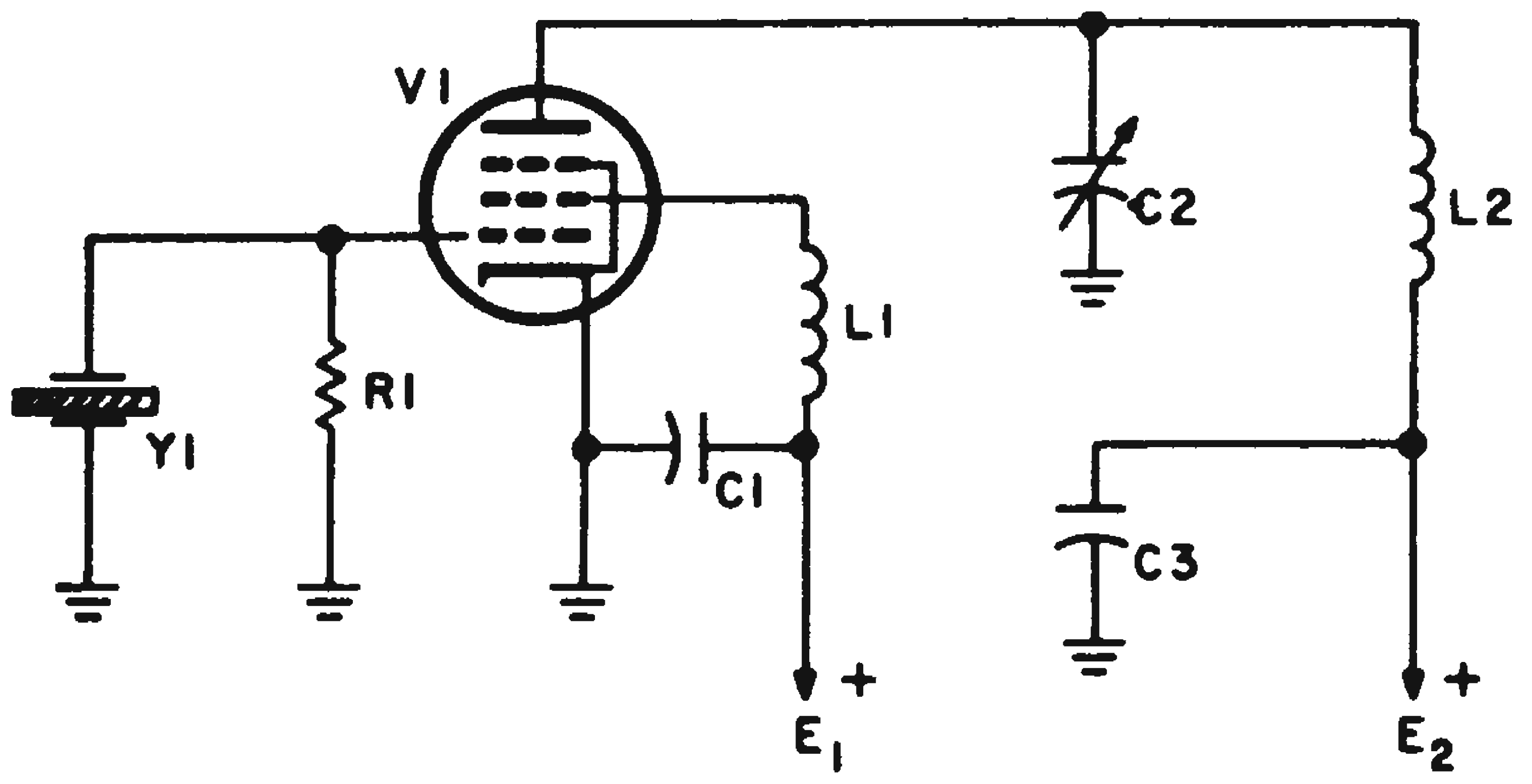

Grounded-cathode electron-coupled Miller oscillator has application in hf, vhf and lower uhf range.

In applying the circuit, the pentode section of a type 6U8 tube was used to provide 130 mc mixer injection for a vhf receiver converter. A type 6AG7 tube was used for a 48-mc output in a vhf transmitter-exciter.

Edwin E. Steinberg, Chicago, Ill.

Dual Frequency Oscillator Built With 6EZ8 Tube

A dual frequency, low impedance source was required for upper and lower sideband carrier re-insertion. The frequency selector switch had to be remote, stray radiation and leakage were not permissible and the printed circuit usable space was 2-3/4 sq in. Selection of a crystal within an oscillator circuit was not possible; the required long rf shielded leads interfered with the oscillator operation in different ways, depending on the type of oscillator circuit. Since the usable space and economy rejected the use of several tubes, a rather new comer among the electron tubes, the 6EZ8 was selected.

The 6EZ8 is very similar in characteristics to the 12AT7 and is well suited to low power oscillator circuitry. Since low impedance output was required, one section is used as a cathode follower stage and the two other sections as individual oscillators. Selection of the operating oscillator is determined by switching the dc plate supply. This eliminates all rf leads. The coupling between each oscillator and common cathode follower is assumed constant. The fact that the rf plate impedances are coupled through $E3$ — $C4$ required a circuit having a minimum of such impedance to avoid shunting effect or interaction. A modified Pierce oscillator was selected. Grounded cathode operation was necessary because of the common cathode and filament connections.

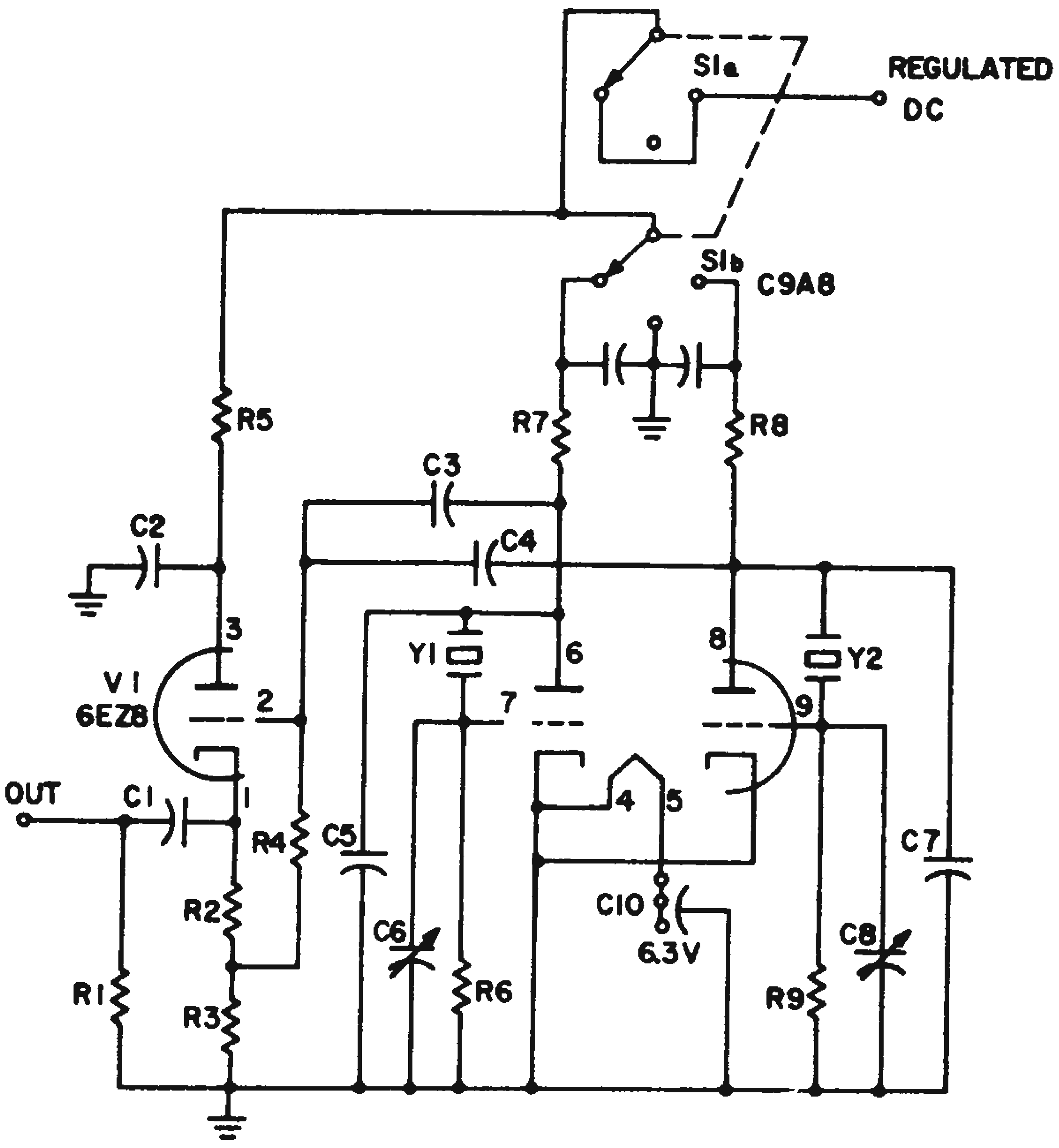

Dual frequency, low source impedance oscillator uses 6EZ8 tube in modified Pierce circuit.

Georges M. Cnudde, Engineer, Sierra Electronic Corp., Div. of Philco Corp., Menlo Park, Calif.

Simple Circuit Halves 20-Mc Supply Frequency

A simple circuit was required to supply a 10-mc signal from a 20-mc source. The circuit shown fulfilled the requirement quite adequately.

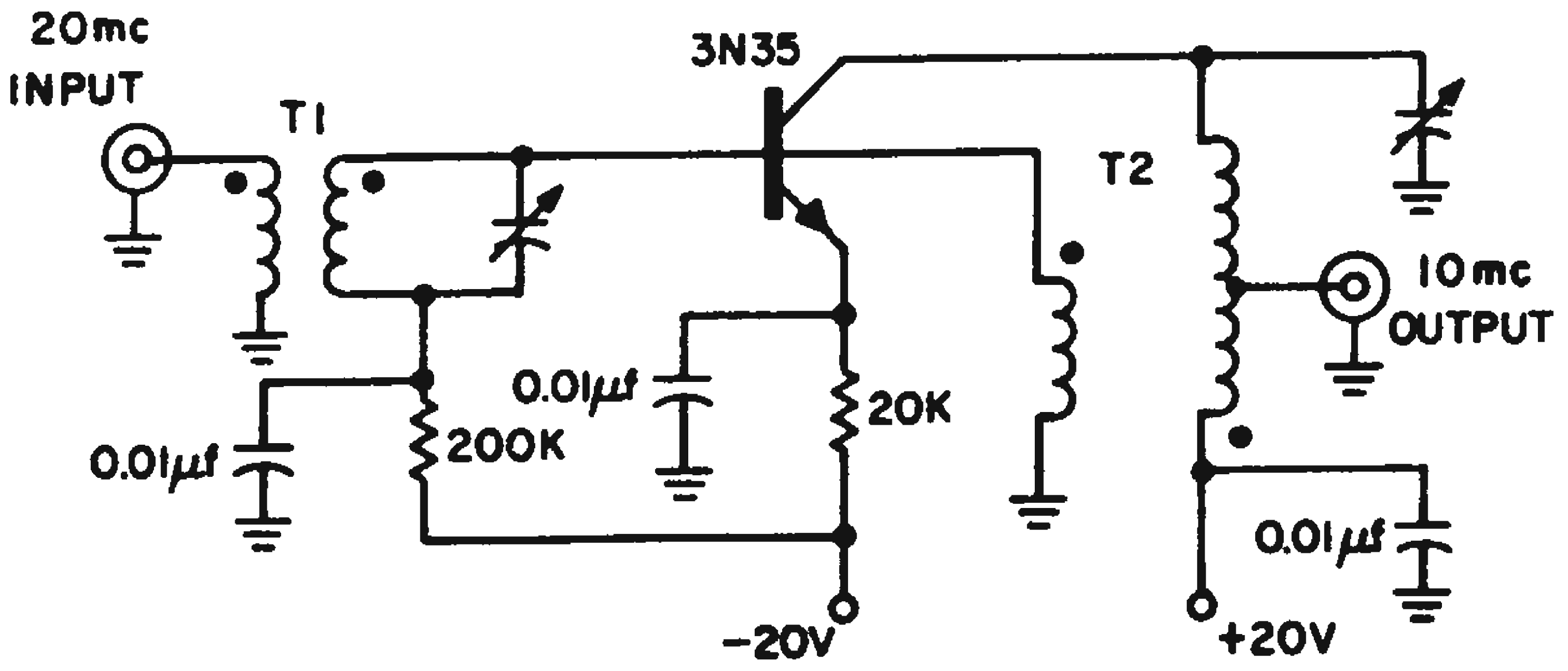

Frequency divider has two resonant circuits—the input circuit at 20 mc, the output at 10 mc.

Transformer T_1 is resonant at the 20-mc input frequency. Transformer T_2 is resonant at 10 mc, with a portion of the 10-mc energy coupled back into the transistor. The loop gain is low enough to keep the circuit from oscillating with the drive removed.

Herbert F. Verse, Jr., Research Engineer, Jet Propulsion Laboratory, Pasadena, Calif.

A Two-Transistor Amplitude-Modulated Oscillator

This circuit was designed to modulate a phono-oscillator from a single audio stage driven by a high-impedance crystal pickup. The npn-pnp biasing arrangement allows the high ac collector impedance of the grounded-base oscillator stage to be used for the ac load impedance of audio-modulating transistor Q_2. This provides a large audio gain and allows 100 per cent modulation of the oscillator output from the low-output power of a high-impedance crystal microphone or phono pickup.

Capacitor C_8 acts as an audio-bypass capacitor preventing negative feedback from the collector to the base of Q_2, which would decrease its audio gain and input impedance. The R_2, R_3 network also tends to stabilize the dc operating point of Q_1 and Q_2, and helps to maintain E_c constant during variations in ambient temperature and transistor parameters.

The audio-voltage gain of Q_2 will be approximately equal to its collector-load impedance, divided by R_4. For a typical audio transistor operating at 1 or 2 ma collector current, the ac collector impedance of Q_2 would be approximately 50 K. Thus, if R_2 also is 50 K, the total collector-load resistance of Q_2 will be approximately 25 K since the impedance looking into the collector of Q_1 will be much greater than 50 K, or approximately 2-3 meg at the audio frequencies.

The voltage gain from base to collector of Q_2 will be 25 or greater, and 100 per cent modulation can be obtained with an audio-input voltage of only 350 mv peak-to-peak.

The circuit works as follows: transistor Q_1 and its components form a simple Colpitts oscillator, with positive feedback provided by the capacitor-voltage divider network C_1 and C_4. L_t and C_t form the oscillator-tuned circuit and determine its frequency of oscillation.

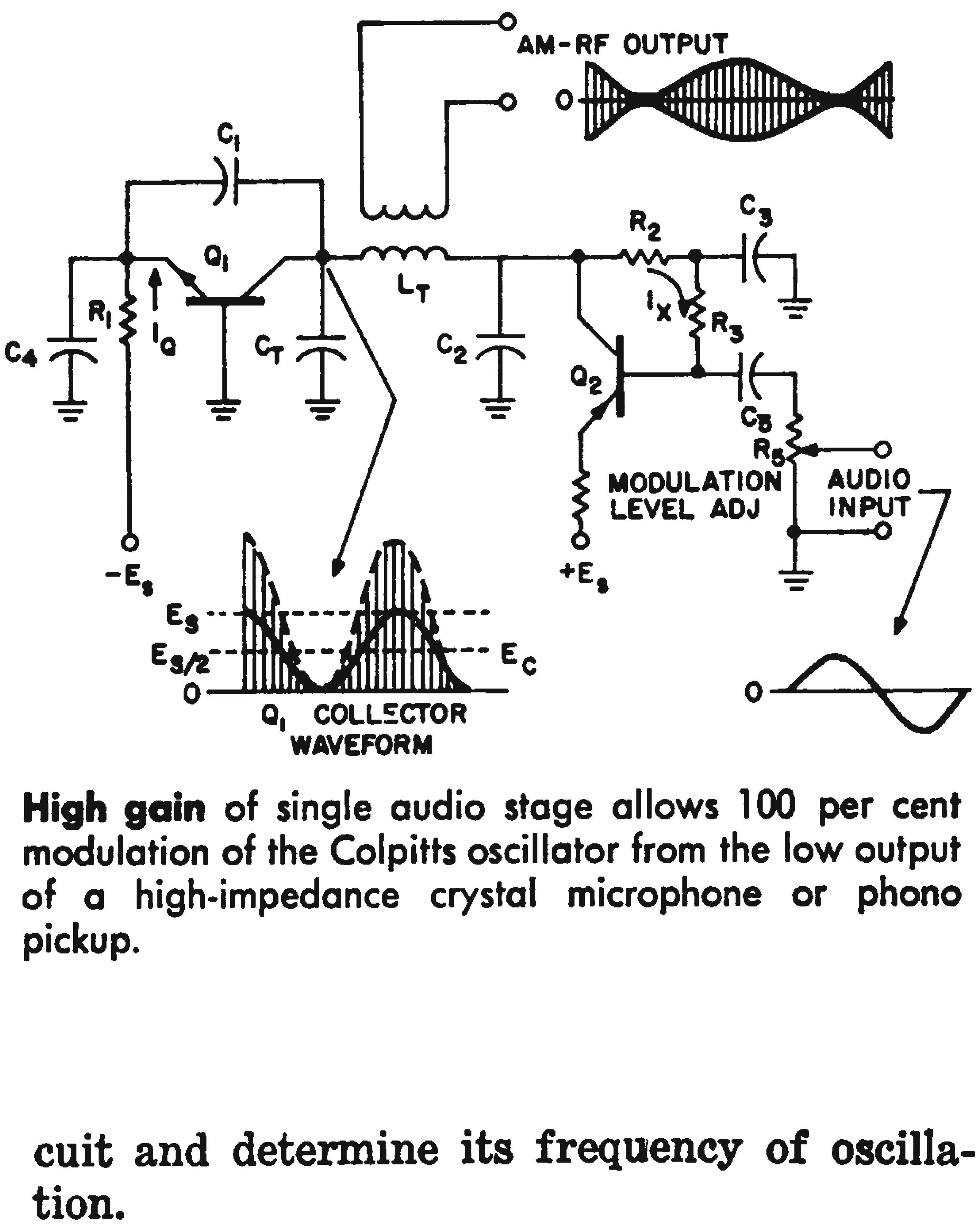

High gain of single audio stage allows 100 per cent modulation of the Colpitts oscillator from the low output of a high-impedance crystal microphone or phono pickup.

$$F_{osc} = \frac{1}{2\pi(L_tC_t)^{1/2}}$$

The value of C_1 should be included in C_t when determining the value of L_t for the desired oscillator frequency. R_1 establishes the value of the average current, I_q, drawn by Q_1 and Q_2.

$$I_q = \frac{E_s}{R_1}$$

C_2 serves as an ac ground for the oscillator stage. However, since it is desirable to keep the impedance at the collector of Q_2 high at audio frequencies, the impedance of C_2 should be approximately 50 K at the highest input audio frequency, F_h.

$$C_2 \simeq \frac{1}{2\pi F_h \times 50{,}000}$$

Eugene P. Hoyt, member of technical staff, Hughes Aircraft Corp., Westminster, Calif.

Tank Circuit Helps Stabilize Quick-Starting Gated Oscillator

Many circuit applications require sine waves or pulses, which must maintain a definite time relationship with the signal which caused them to be generated.

A free running sine-wave oscillator may be synchronized, but this usually requires complex circuitry. Another disadvantage of this method is the fact that the synchronizing signal frequency may vary.

The circuit in Fig. 1 is a gated 200-kc oscillator. In its quiescent state, the control signal causes *Q1* to saturate. The current through *Q1* is limited primarily by *R2*. It flows through germanium diode *CR1* and tank inductor *L1*. The *Q* of the tank is thus sufficiently lowered, so oscillations can not exist.

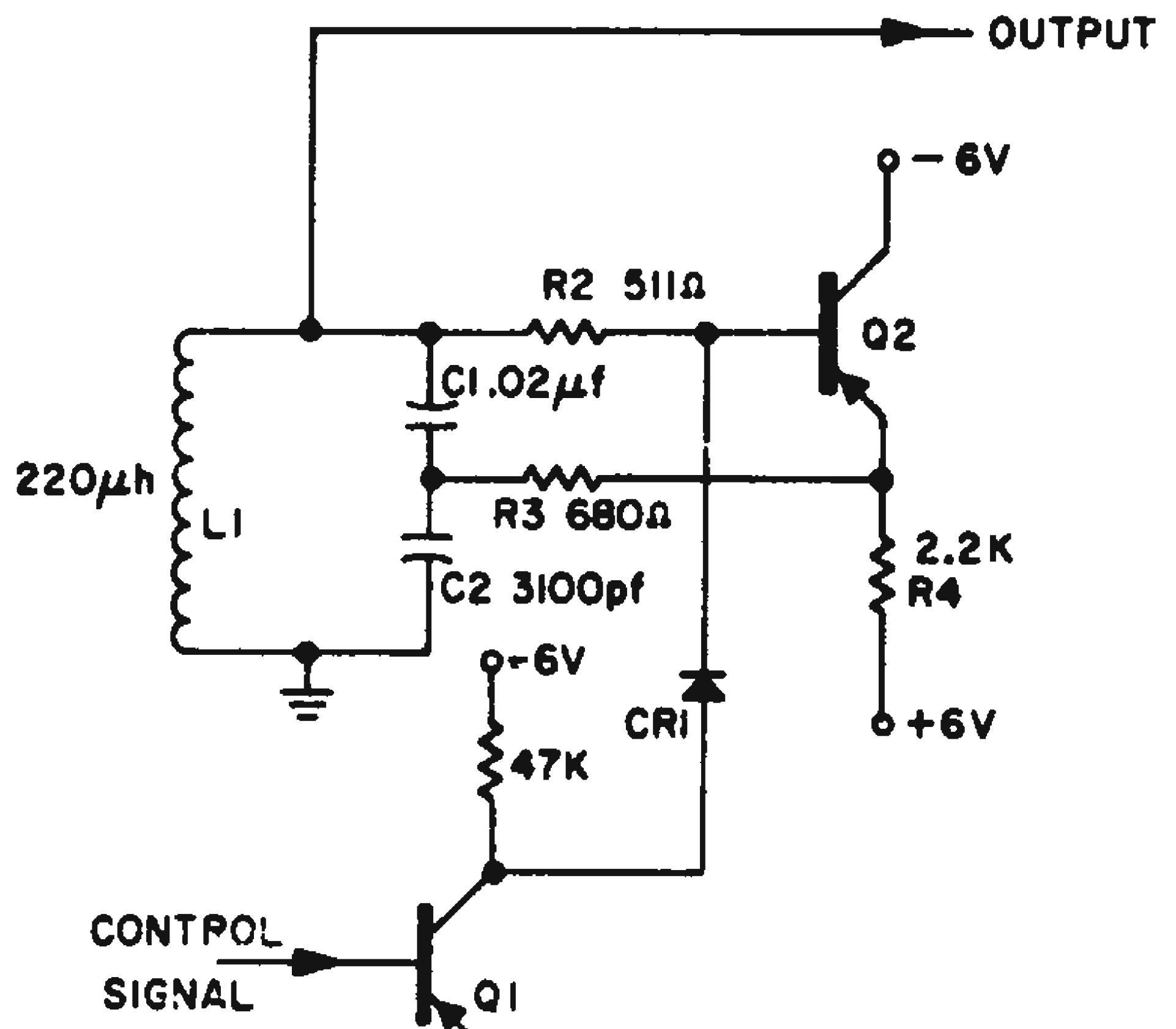

Fig. 1. When control signal turns *Q1* off, energy stored in tank inductor *L1* starts oscillations within 1 μsec.

When the control signal causes *Q1* to stop conducting, the energy stored in *L1* produces immediate oscillations. The oscillations are sustained by feedback through *R3* and *C1*. The control signal in this application causes the oscillator to be active for 20-μsec intervals. The output can be taken directly from the tank, but the impedance of the circuit that it drives must be high.

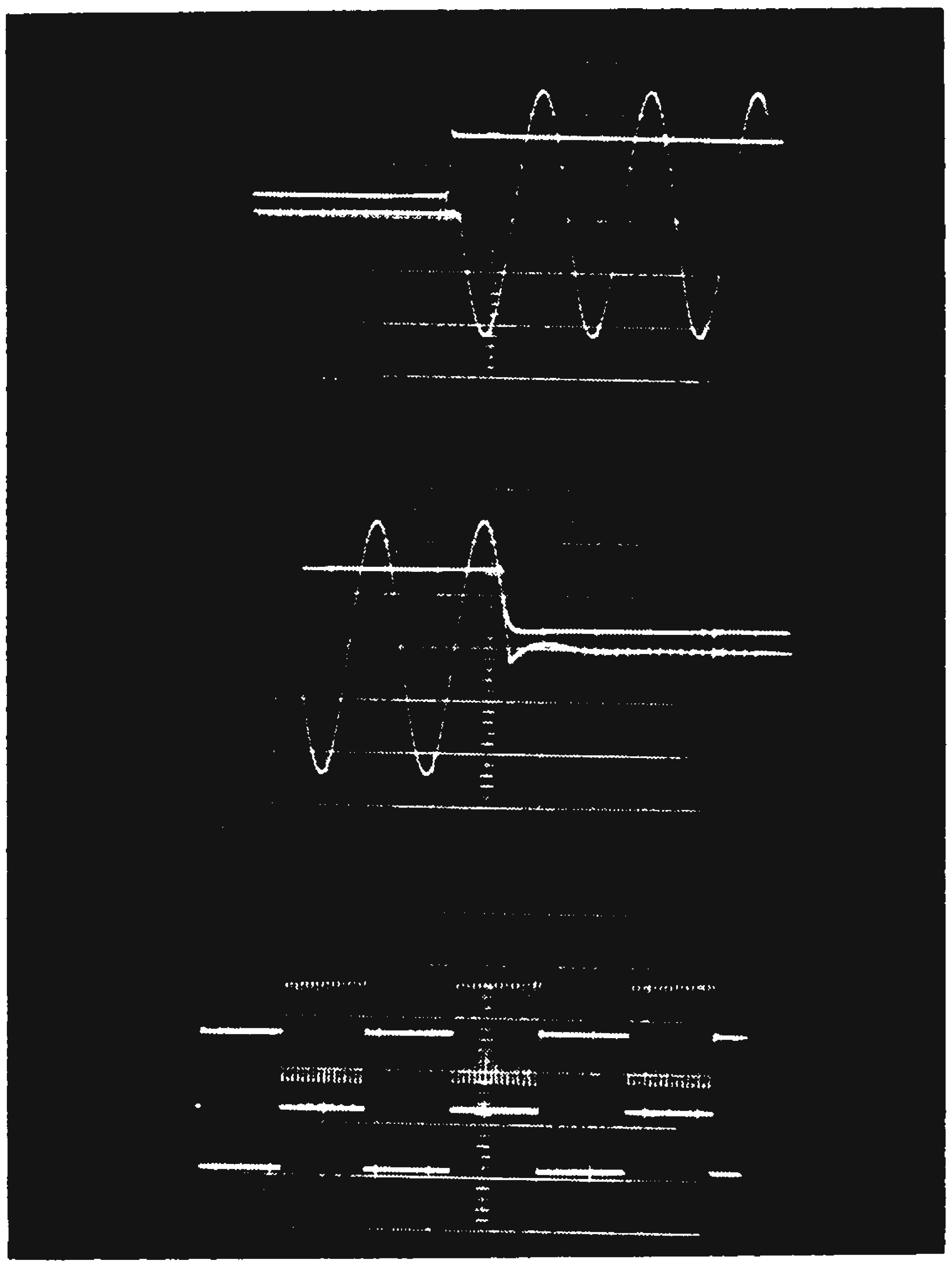

Fig. 2. Waveforms show how quickly and accurately control pulse turns oscillator on and off. Upper two waveforms are shown with scope calibrated at 2.5 v/cm and 2.5 μsec/cm. Lower photo has calibrations at 5 v/cm and 50 μsec/cm.

The oscillator described has the following characteristics: Frequency: 200 kc ±0.02 per cent from a temperature of 0 C to 50 C. Time required to start oscillator: Less than 1 μsec. Output amplitude: 10 v peak-to-peak.

Jack McGruder, Circuits Section, Hughes Aircraft, Fullerton, Calif.

Tuning Fork Oscillator Produces Square Waves Directly

Used in a square-wave generator, a tuning-fork oscillator usually provides about a 4-v sinusoid to be fed into a Schmitt trigger, or other squaring circuit. However, much higher voltage square waves can be obtained directly from the oscillator by introducing positive feedback, as shown in Fig. 2. And, the square-wave output has good rise and fall times.

Any of the three common twin triodes may be used by changing the value of *R*,

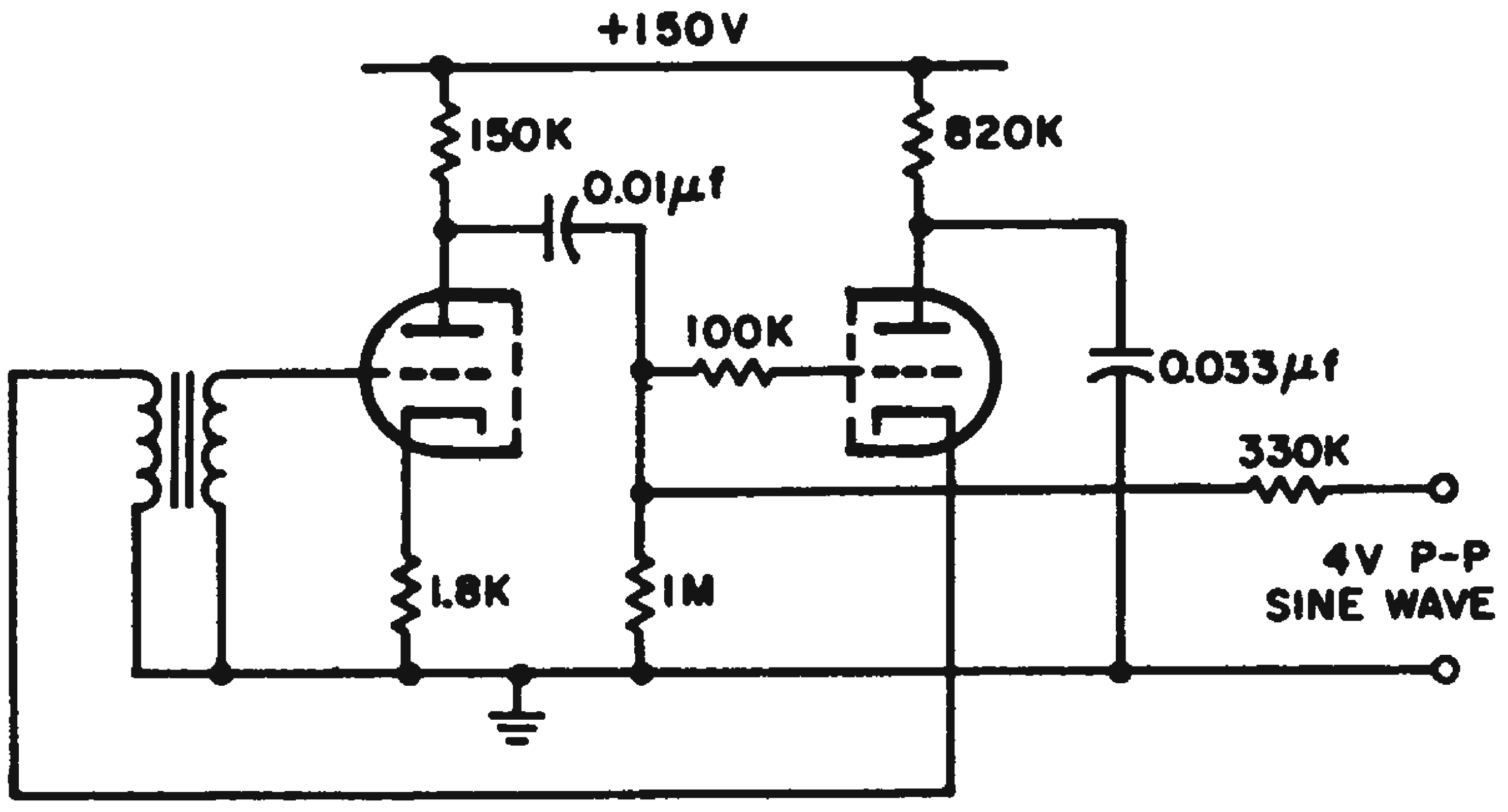

Fig. 1. Usual tuning fork oscillator produces low-voltage sinusoid which is fed to squaring circuit.

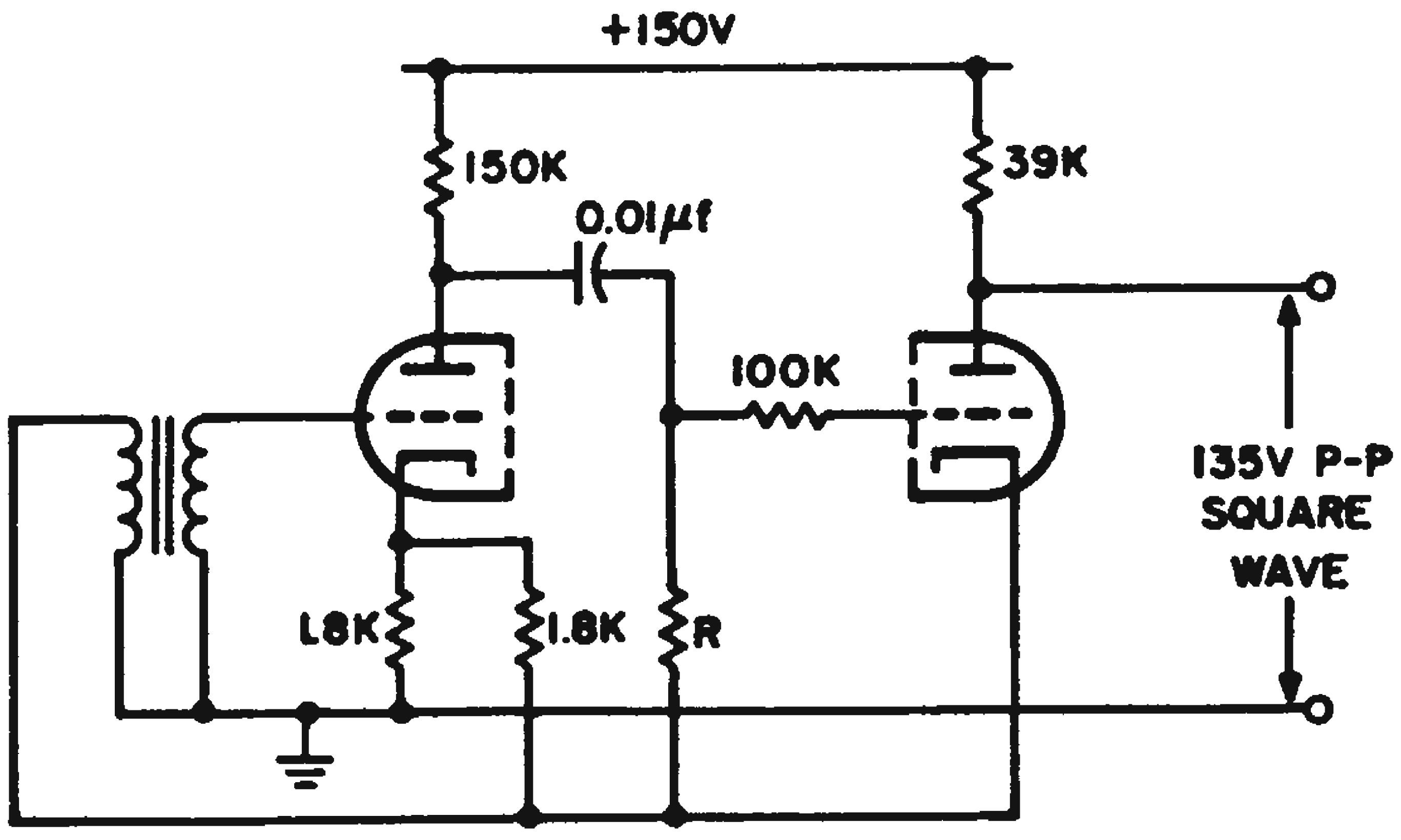

Fig. 2. With positive feedback applied, tuning fork oscillator produces higher voltage square waves, rather than sinusoids.

Table I.

Tube	R	Output (pk-pk)
5814A	220 K	110 v
12AT7	62 K	110
5751	33 K	65

which is a function of the tube rather than of frequency. The table lists values of *R* for maintaining a 50 per cent duty cycle. Peak-to-peak output amplitudes are also indicated. The tuning fork used was a Philamon Laboratories model MJ.

William C. Whitworth, Design Engineer, Scottsdale, Ariz.

Single Potentiometer Adjusts Range of Simple VFO

Here are the design equations for a variable-frequency, phase-shift oscillator that will operate over a frequency range of 5:1 to 20:1. The frequency of the circuit, which uses noncritical components, can be varied by a potentiometer adjustment.

Referring to the circuit, if:

$$R' = R_3 + \textit{input resistance of } T_1$$

then the circuit's frequency of oscillation is:

$$f_0 = \frac{1}{2\pi C\sqrt{3RR_L + R'R_L + 3R^2 + 3R'R}}$$

For this oscillating frequency the required transistor β is:

$$\beta_{req} = 11 +$$

$$\frac{10R'}{R} + \frac{3R_L}{R} + \frac{R'R_L}{R^2} + \frac{9R}{R_L} + \frac{14R'}{R_L} + \frac{2R'^2}{R^2} + \frac{6R'^2}{RRL}$$

These equations can be simplified somewhat by making the substitutions:

$$M = \frac{R_L}{R} \text{ and } K = \frac{R'}{R}$$

Thus, the required β is:

$$\beta_{req} =$$

$$2K^2 + 10K + 11 + M(3+K) + \frac{1}{M}(9+14K+6K)$$

and the frequency of oscillation is:

$$f_0 = \frac{1}{2\pi CR\sqrt{K(M+3)+3(M+1)}}$$

Frequency is varied by adjusting R'.

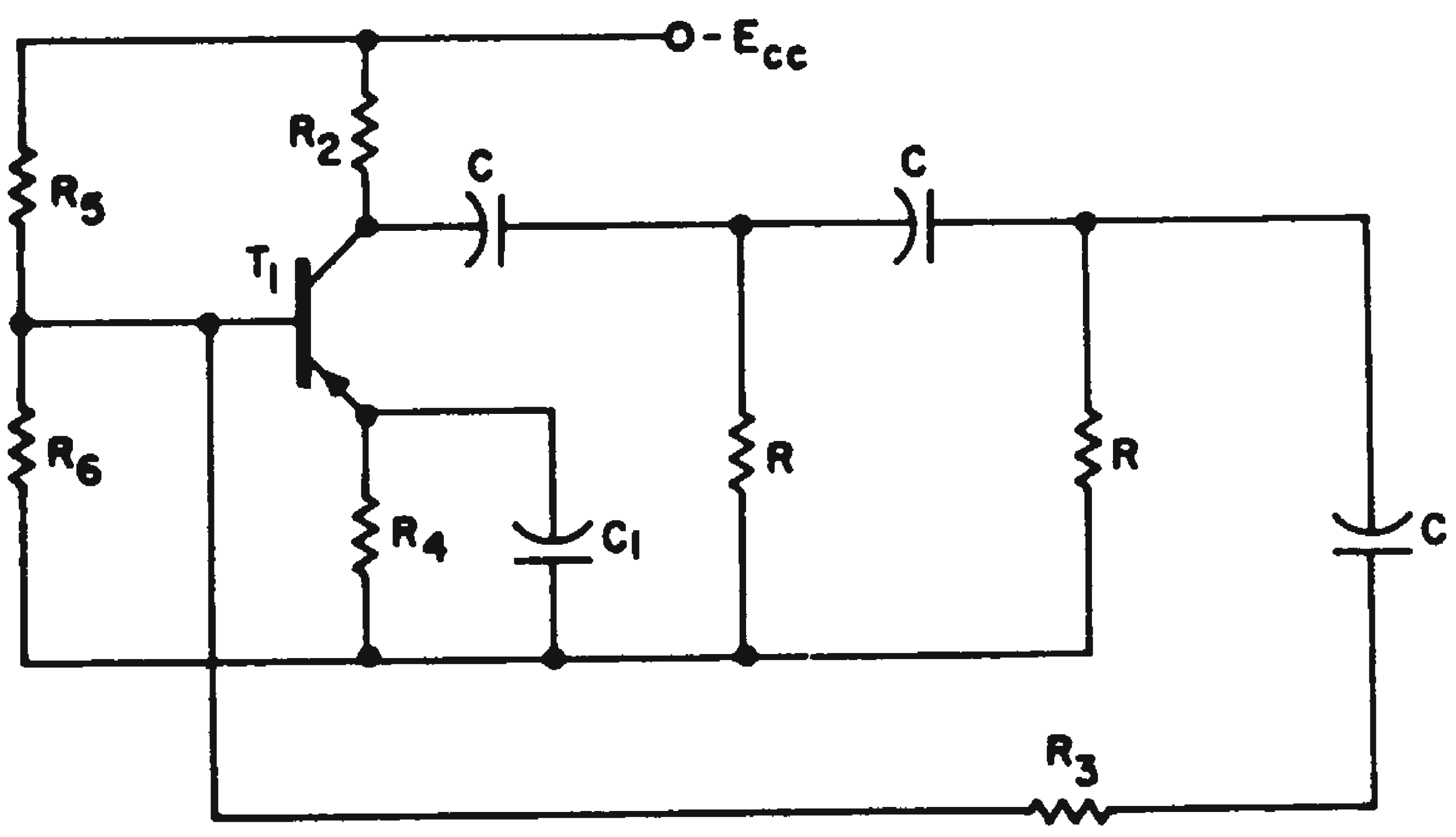

Variable frequency oscillator is variable over range of 5:1 to 20:1.

David R. Olsen, Engineer, Western Development Laboratories, Philco Corp., Palo Alto, Calif.

Unijunction Oscillator Has Frequency Trim Control

The unijunction relaxation oscillator, because of its frequency stability and wide frequency range (variable with a single potentiometer), invites uses where pot shaft position accurately describes a given frequency.

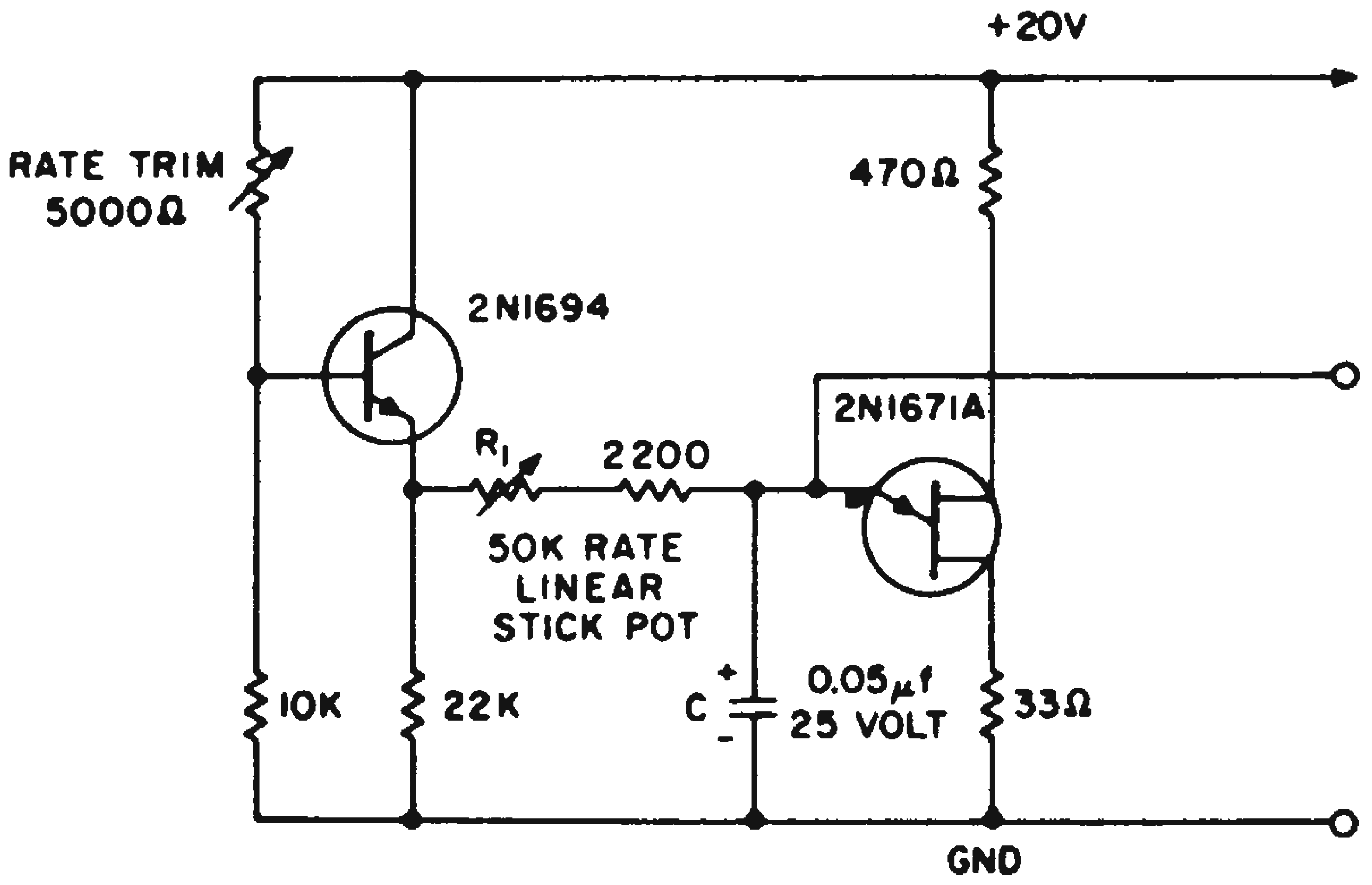

Low-interaction trim control for frequency of unijunction relaxation oscillator uses common-collector variable regulator for timing-circuit voltage supply.

In practice, however, variation of unijunction intrinsic stand-off ratio and timing-capacitor variations can destroy the pot shaft/frequency characteristic if simple series resistance trim is employed in the timing network. Further the variation in Thevenin equivalent resistance of a variable divider may be intolerable if divider current must be held to a low value.

The circuit described provides a very low interaction trim control for frequency by employing a common-collector variable regulator in the timing-circuit voltage supply.

The source impedance is low and relatively constant over a wide range with little additional current drain.

Production tolerances of aluminum electrolytic timing capacitors can be absorbed by this circuit, and the least expensive unijunction transistors can be employed.

The 5000-ohm rate trim potentiometer provides frequency set that is independent of the main timing potentiometer R_1. The center frequency is approximately 1000 cps. R_1 provides at least a decade variation in frequency and the trim control provides at least one octave variation.

John H. Phelps, manager application engineering, General Electric Co., Semiconductor Products Dept., Syracuse, N. Y.

Gated Tunnel-Diode Oscillator

A pulsed 30-mc oscillator was needed to test radar IF strips. Our commercial signal generator had excessive 30-mc signal feedthrough when the pulse was off. Starting phase of the 30-mc signal varied from pulse to pulse. In addition turnoff time was unsatisfactory in the commercial unit.

The test requirements were met by using the output of a fast-rise pulse generator to power a simple tunnel-diode oscillator. The results were excellent. Approximately 100 mv peak-to-peak were delivered to a 100-ohm load. Changing the pulse amplitude accomplished electronic tuning, varying the frequency from about 28 mc to 35 mc cycles. There is no feedthrough problem since the oscillator is completely off in the absence of a pulse. The oscillator is coherent in that it always starts with the same phase when pulsed.

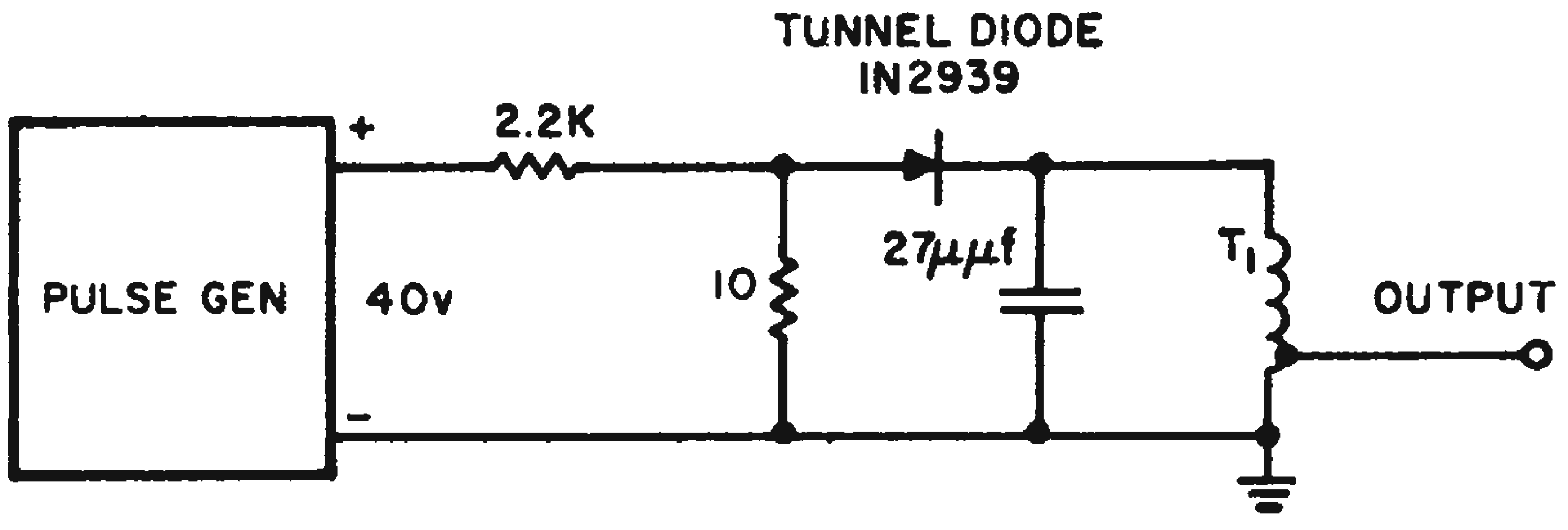

Radar IF test oscillator provides 100 mv into 100-ohm load.

This device readily may be converted to a sweep-frequency oscillator. Tilt on the input gating pulse will produce fm within the output wave packet. Pulse-to-pulse fm may be achieved by amplitude-modulating the input gating-pulse train.

If frequency modulation or electronic tuning is not required, a crystal-controlled tunnel-diode oscillator is desirable, since frequency calibration is inherent in crystal choice.

Paul E. Harris, research associate, Syracuse University Research Corp, Syracuse, N. Y.

Sweep-Frequency Oscillator Operates on Collector Capacity

Low frequency if amplifier design often calls for a sweep oscillator whose frequency can be changed electronically. When the ratio of frequency deviation to center frequency is small, the circuit shown can be used to achieve surprising linearity.

The circuit's mode of operation depends upon the inherent collector capacitance, C_c, of the transistor. This collector capacitance is variable and is a function of the collector voltage, V_c. The analytic relationship can be expressed as:

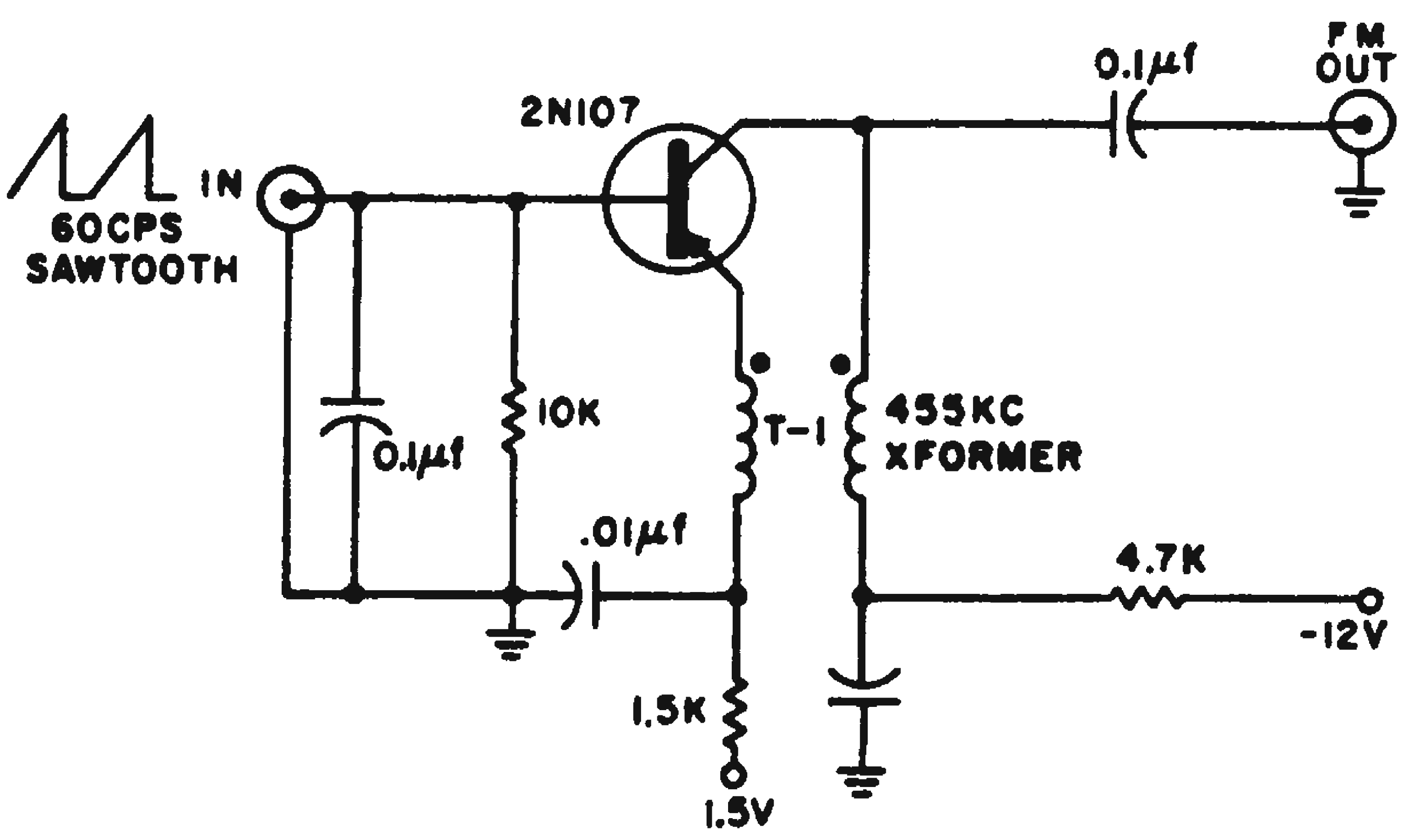

Operation of electronically-swept oscillator depends upon the inherent collector capacitance, C_c, of the transistor.

$$C_c = \frac{K_o}{(V_o)^{1/n}} \qquad (1)$$

where:

C_c = collector capacity
V_c = collector voltage
n = constant, typically equal to 2
K_o = constant

The circuit of Fig. 1 basically operates as an rf oscillator in the base configuration. If a low-frequency sweep, that is, 60 cps sawtooth, is applied to the base, the collector capacitance changes according to Eq. 1 and the desired frequency change is obtained.

Joseph R. Kotlarski, member of technical staff, Hughes Aircraft Co., Culver City, Calif.

Clamp Circuit Improves Blocking Oscillator Duty Cycle

Blocking oscillators find limited application because conventional circuits are unable to achieve a duty cycle much greater than 0.2.

This limitation is introduced by the standard procedure of putting a clamping diode across the transformer primary to protect the transistor. After each pulse, the energy stored in the transformer field must be discharged before the oscillator can fire again. The transformer attempts to do this by the well known fly-back pulse.

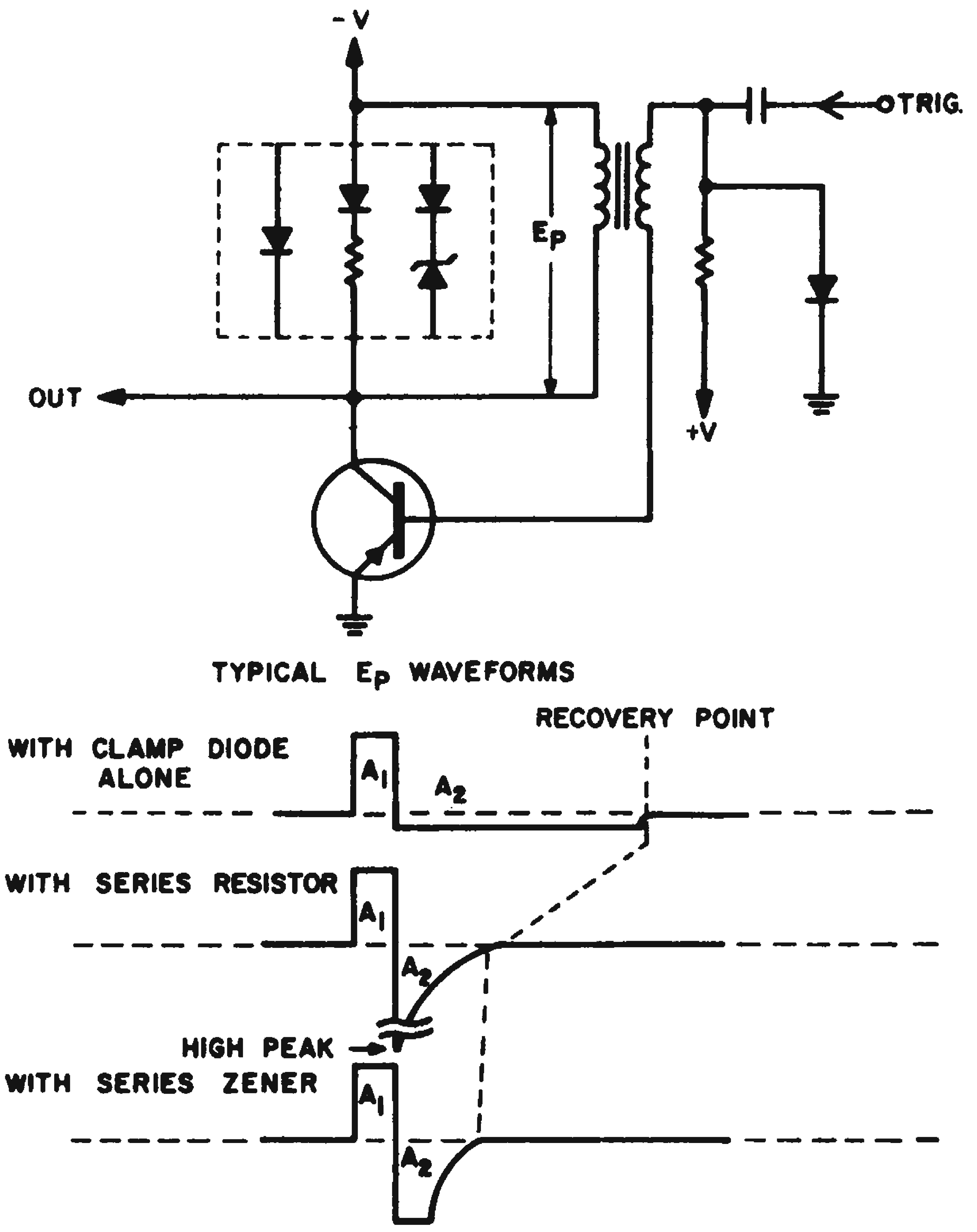

Series Zener diode shortens recovery time of blocking oscillator without endangering transistor.

The clamping diode prevents the fly-back pulse from building up to a significant voltage level, and appears as a very small resistance to the pulse. This lengthens the L/R time constant of the discharge path.

The duty cycle may be improved by increasing the equivalent resistance of the discharge path to allow faster discharge of the stored energy. A resistor in series with the clamping diode will help considerably, but is somewhat unpredictable. A better solution is to use a Zener diode in series with the clamp diode.

This allows the fly-back pulse to build up to a significant voltage and presents the equivalent of a larger path resistance while still precisely controlling the fly-back amplitude to protect the transistor. In any case, the transistor has to withstand a higher peak voltage, but this is normally no problem.

Roy P. Foerster, group engineer, Martin Co., Baltimore, Md.

Bilateral Crystal Oscillator Has Two-Frequency Output

The bilateral characteristics of the transistor come into play in this two-frequency crystal oscillator. Either of the two frequencies may be selected by applying plus-or-minus voltage to the supply terminal.

When plus voltage is applied, the current flows through D_1 to the emitter of the transistor. Tuned circuit L_2C_2 and crystal unit X_2 then become active and an output is derived from F_2. The L_1C_1 network is shorted out by diode D_1 and crystal X_1 is connected between base and emitter where there is no gain to promote oscillation in this unit.

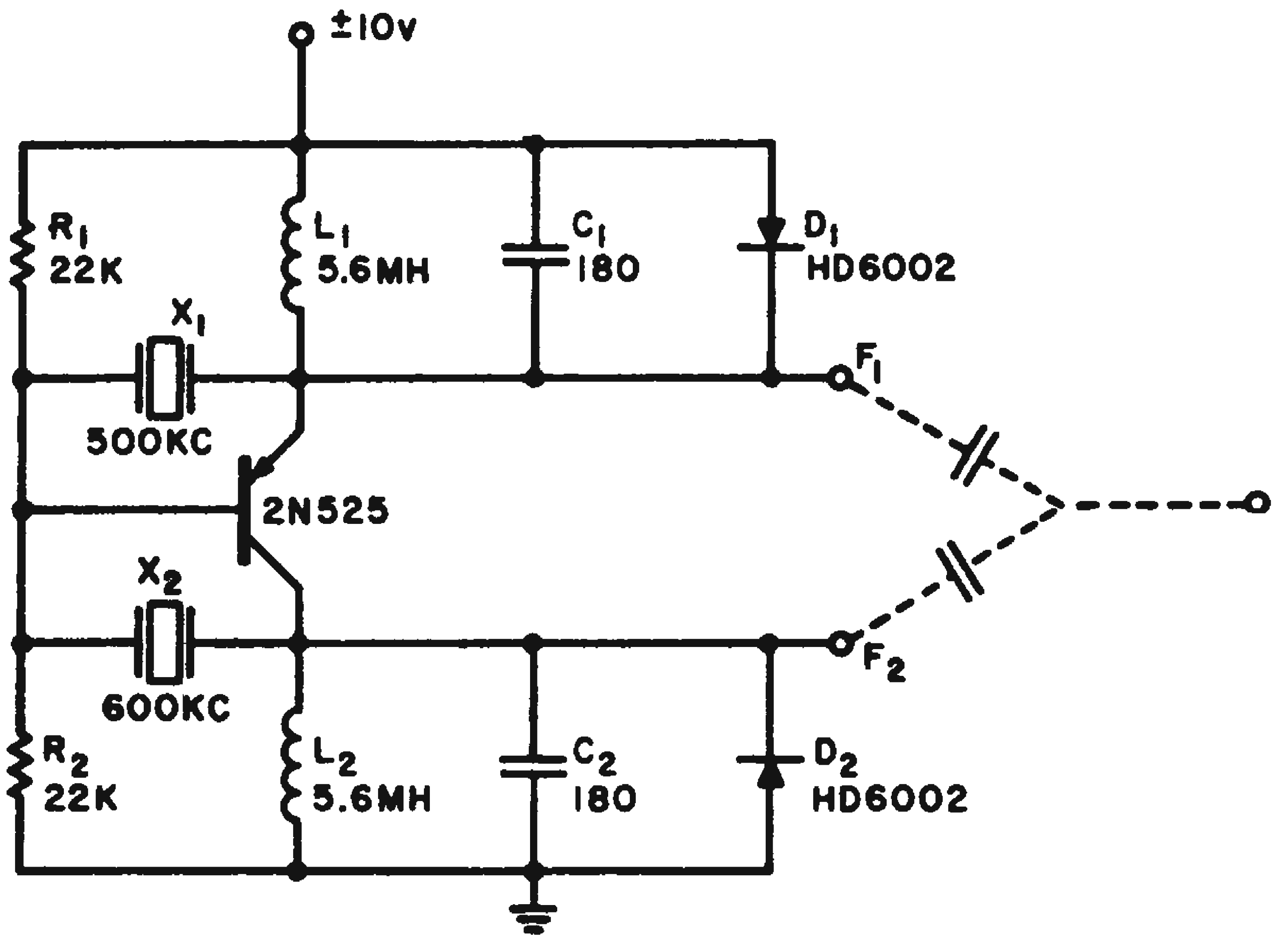

Either of two oscillator frequencies can be obtained by reversing polarity of supply voltage.

With minus voltage applied to the supply terminal, the transistor operates in the "inverted" mode. Effectively, the collector becomes the emitter and vice versa. In this case, oscillations are generated by L_1C_1 and crystal unit X_1. Output voltage will be delivered at output terminal F_1.

If desired, two additional capacitors (shown by dashed lines) may be added to provide a single output terminal.

Diodes D_1 and D_2 limit the output to 0.7-v rms. Since the transistor is operating in an oscillator circuit the beta of the inverted mode need only be sufficient to produce oscillation. Therefore, it is not necessary to use selected bilateral transitors in this application. This circuit can be used to select frequencies from a remote point by electrical means. Since it uses a single transistor, there is a saving in components.

John M. Tewksbury, principal engineer, Avionics Products, Bendix Corp., Towson, Me.

Diode-Resistor Pair Improves One-Shot Multi Fall Time

In a collector-coupled one-shot multivibrator, Fig. 1, the trailing edge of one of the pulses always has a poorer fall time than the other. This easily can be overcome by adding a resistor and a diode as shown in Fig. 2.

In Fig. 1 when the trailing edge of a pulse occurs, the collector of Q_1 cannot rise to E immediately because C has to be charged. The result is a slow trailing edge, which depends on R_c and C.

If the circuit is designed as shown in Fig. 2 diode D will be reversed biased when the trailing edge occurs. The voltage at the collector of Q_1 will now rise to $ER/(R_c + R)$. This voltage practically will be E if R is chosen much larger than R_c. It can be seen that the fall time now is independent of C. As a result, both trailing edges will have the same fall time.

The diode D has been added to short out the resistor R from the time the one-shot is triggered until the trailing edge occurs. The operation during this period is that of a conventional one-shot.

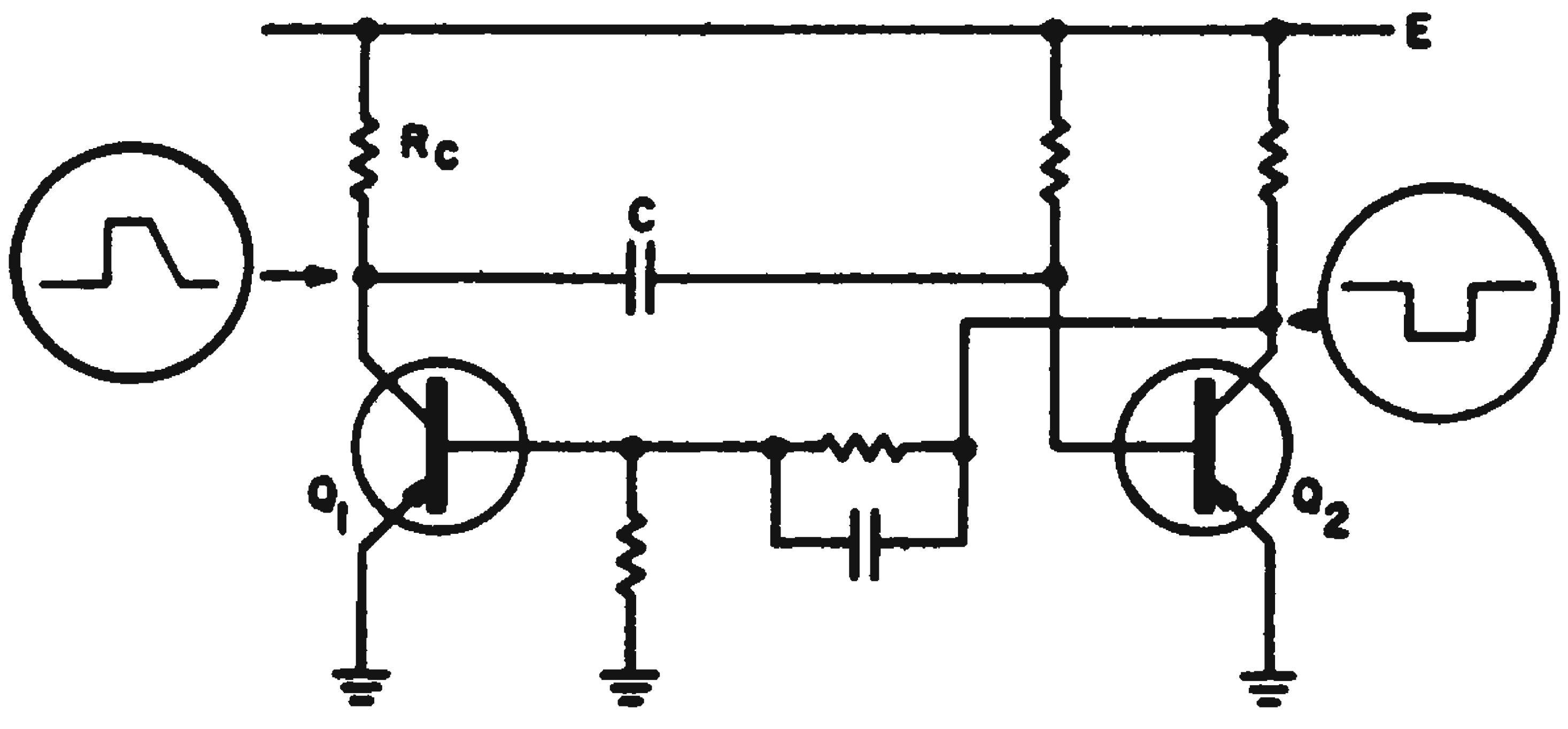

Fig. 1. In conventional one-shot, one of the pulses always has a poorer trailing edge than the other.

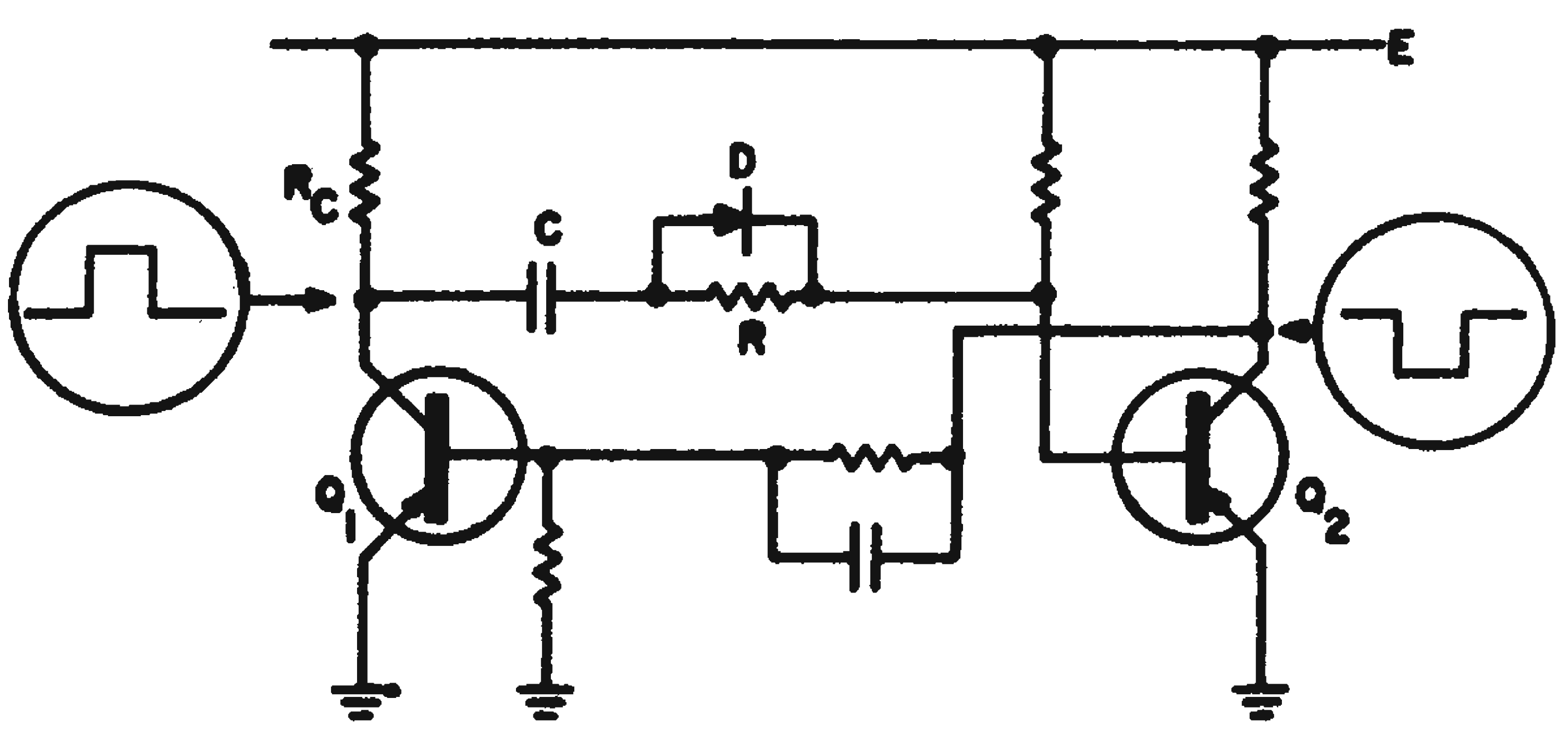

Fig. 2. Both pulses can be squared-up by adding a resistor and diode to the collector with the poorer pulse.

Erik Rosenbaum, engineer associate, The Bendix Corp., Baltimore, Md.

Zener-Biased BO Has High Repetition Rate

The usual method of self-biasing the output tube of a monostable blocking oscillator is to apply a positive voltage to its cathode. But if the output pulse is to be taken from this cathode, it usually is desirable to block this dc bias from the load by a suitable coupling capacitor, as shown in Fig. 1.

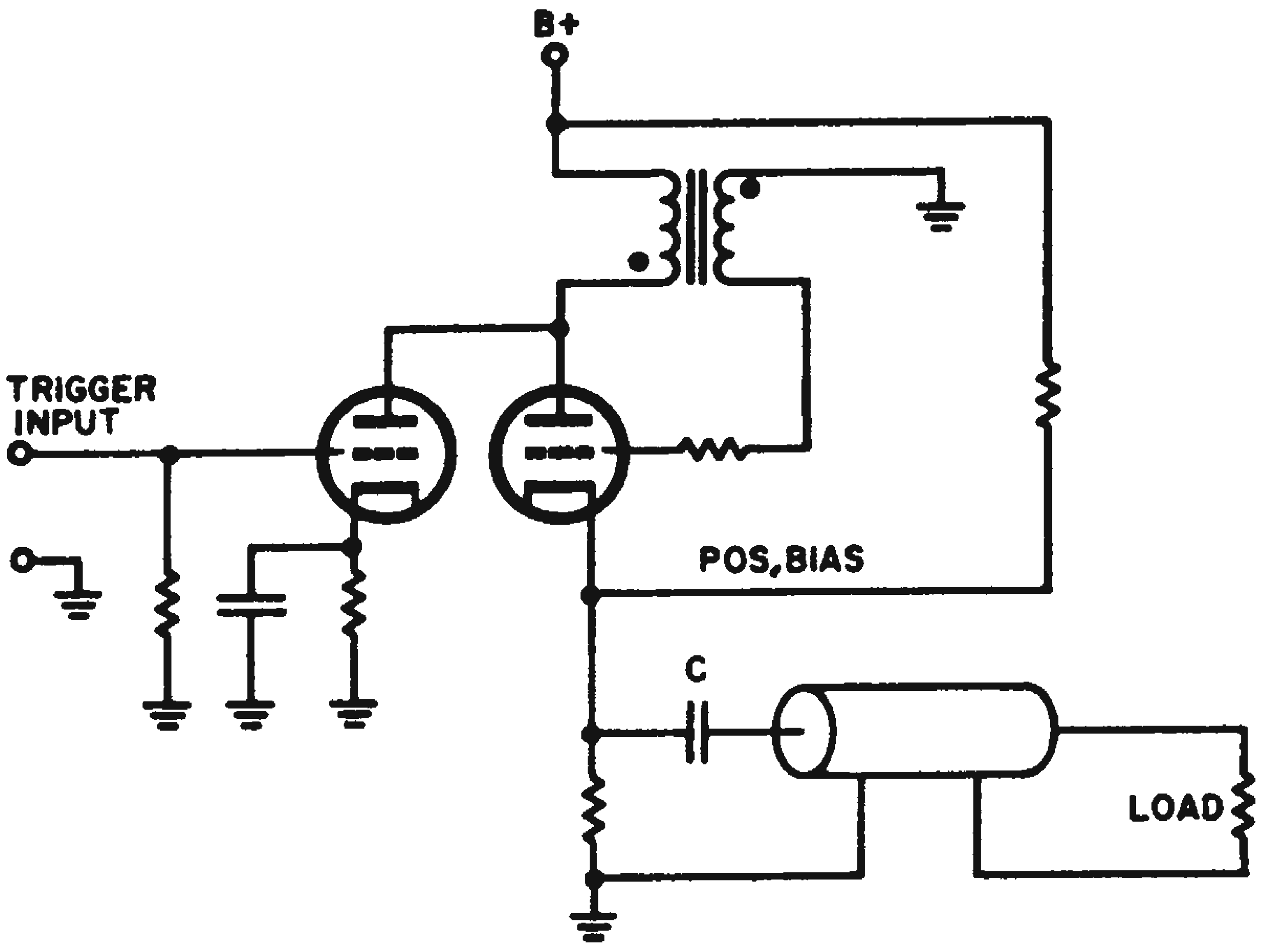

Fig. 1. Usual method of self-biasing a blocking oscillator applies a positive voltage to the cathode of its output tube. But rapid accumulation of charge on the coupling capacitor C restricts the oscillator to low repetition rates.

Although this circuit operates well at low pulse rates, at high rates the rapid accumulation of charge on coupling capacitor *C* increases the positive bias on the cathode. This makes the blocking oscillator inoperative. A circuit that circumvents this problem is shown in Fig. 2.

In this circuit, the Zener diode, *CR*, provides the bias voltage for the output tube and also a low-impedance discharge path for coupling capacitor *C*. In the nonconducting state, cathode bias is developed across the Zener because of the current through R_1. This biasing current also passes through the load. Because of its extremely low magnitude (approximately 2 ma) no significant dc voltage is at the load.

Both the average and peak Zener currents must, of course, be limited to the maximum ratings of the particular diode used. Average Zener current is equal to the average load current. Maximum Zener current is limited by resistor R_2, which usually has a value in the order of a few hundred ohms.

In the circuit of Fig. 2, the Zener is actually two 1N429 Zeners in series. The tube is a 6922 and the pulse transformer a Valor 05LC2. The dual Zener provides a normal bias during tube cutoff of approximately 12.5 v. During tube conduction, this bias increases to approximately 17 v. After conduction, the bias circuit returns to within 10 per cent of normal in 25 μsec. This recovery time is sufficiently short to permit satisfactory operation of the blocking oscillator at pulse repetition rates up to 50 kc.

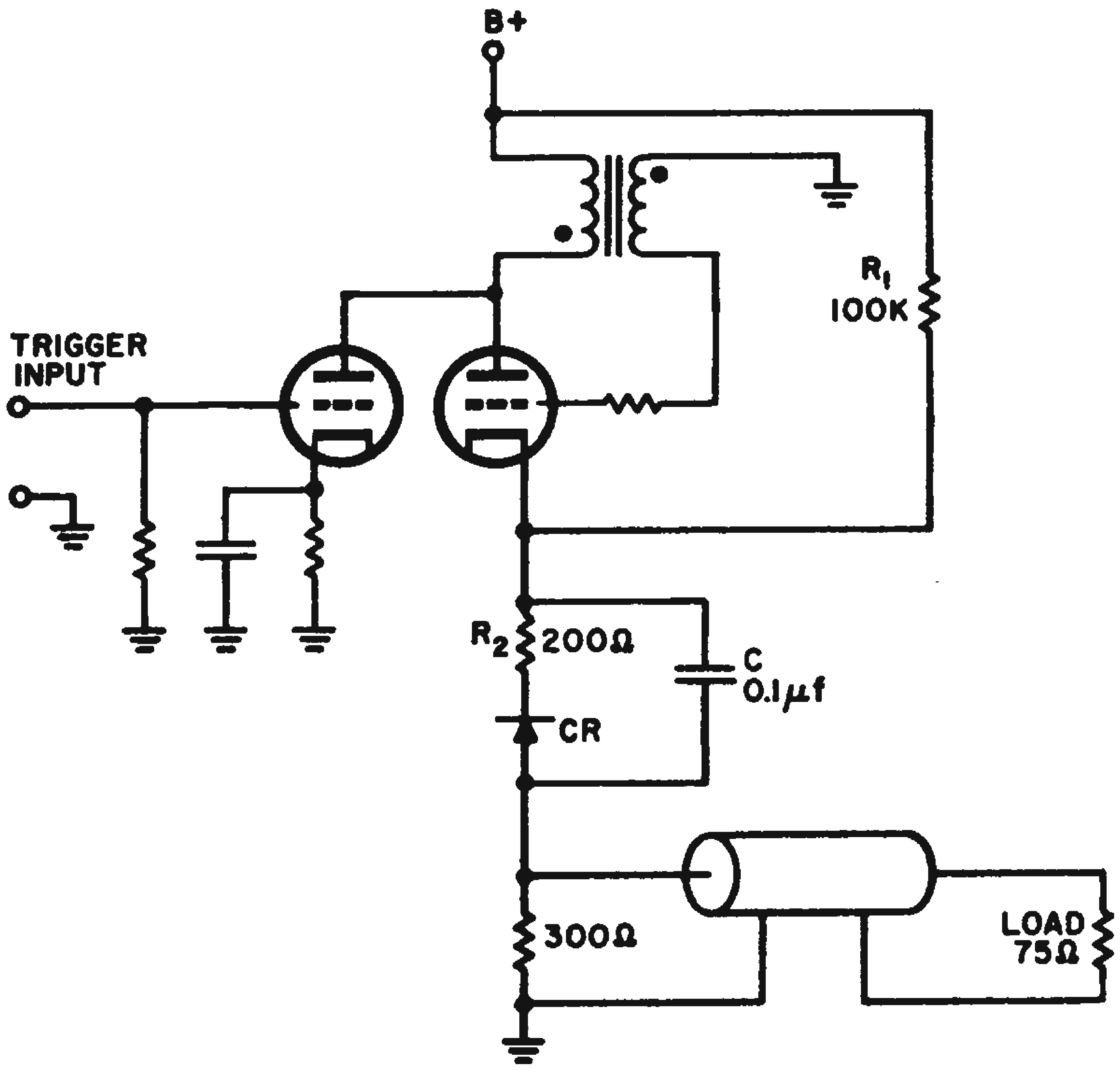

Fig. 2. Higher repetition rates are possible if Zener diode *CR* provides the output tube's bias voltage.

Edward E. Godin, Sandia Corp., Sandia Base, Albuquerque, N. M.

Regenerative Stage Enhances Flip-Flop Power Output

An inherent deficiency of the astable flip-flop as a source of ac is its load limitations. As the collector load is increased, a point is reached where the available base current is inadequate to drive the transistor into saturation. The circuit shown here makes use of a regenerative amplifier stage to supply this needed base drive.

The circuitry to the left of *A-B* is a typical astable flip-flop, except that the 12-ohm load would prohibit proper operation. As Q_1 starts turning off, the charge on C_2 goes negative causing Q_2 to start turning on. As the collector of Q_2 goes positive (toward ground) Q_3 is forced to turn on, thus supplying another 25 ma (approximately) of base current to Q_2. The peak power delivered to the 12-ohm load will be nearly 10 w, the average power will be 3 w for a 50 per cent duty cycle (square wave output). The current delivered to the load when Q_2 is in saturation is 1 amp. Capacitors C_3 and C_1 increase the output rise time.

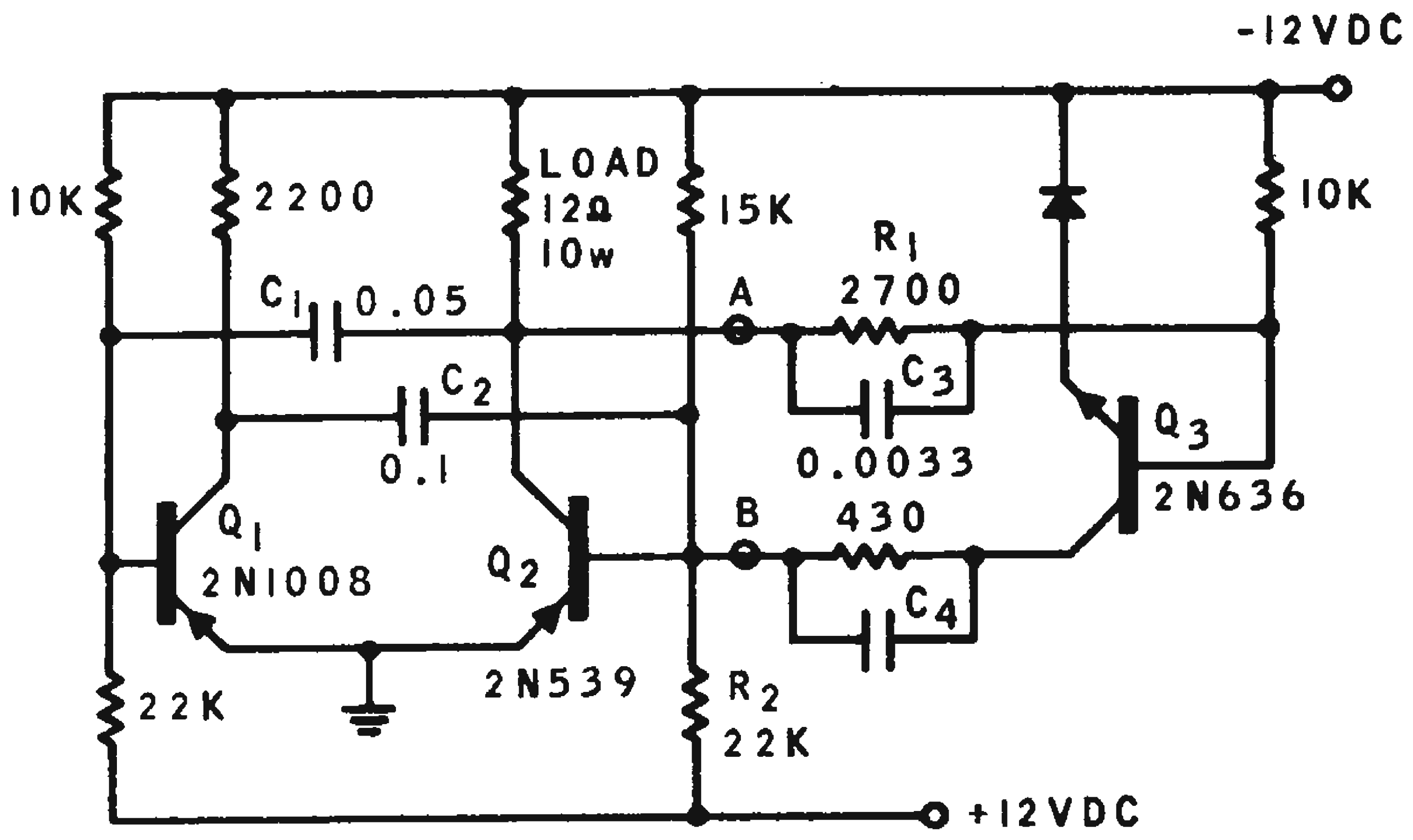

Regenerative amplifier boosts flip-flop output to supply 10 w to 12-ohm load.

This basic idea easily can be extended to the stable and monostable flip-flops as well. The astable circuit as shown can be used as a dc-to-ac or dc-to-dc converter, by replacing the load resistor with a transformer primary, or as an oven control circuit, by using a heater element as a-load and putting a thermistor in series with R_2 to vary the duty cycle with temperature. The monostable could be used to drive high-current relays, or to switch a larger number of logic stages.

Robert A. Durand, electrical engineer, Bendix Systems Div., The Bendix Corp., Ann Arbor, Mich.

Obtaining Zero Reference For Flip-Flop Square-Wave Output

A transistor flip-flop driven by a blocking oscillator produces excellent symmetrical square waves, but lacks a zero voltage reference. For certain test procedures, such as testing the response time of a potentiometric recorder, a square wave with negligible zero offset is convenient.

As shown in the diagram, this is easily accomplished by obtaining the base bias for one transistor through a separate resistor, isolating the resultant voltage drop by means of a diode. The remaining zero offset is only that due to the I_{co} of the cut-off transistor—usually at least two orders of magnitude lower than the normal base-biasing current residual in the collector load resistor.

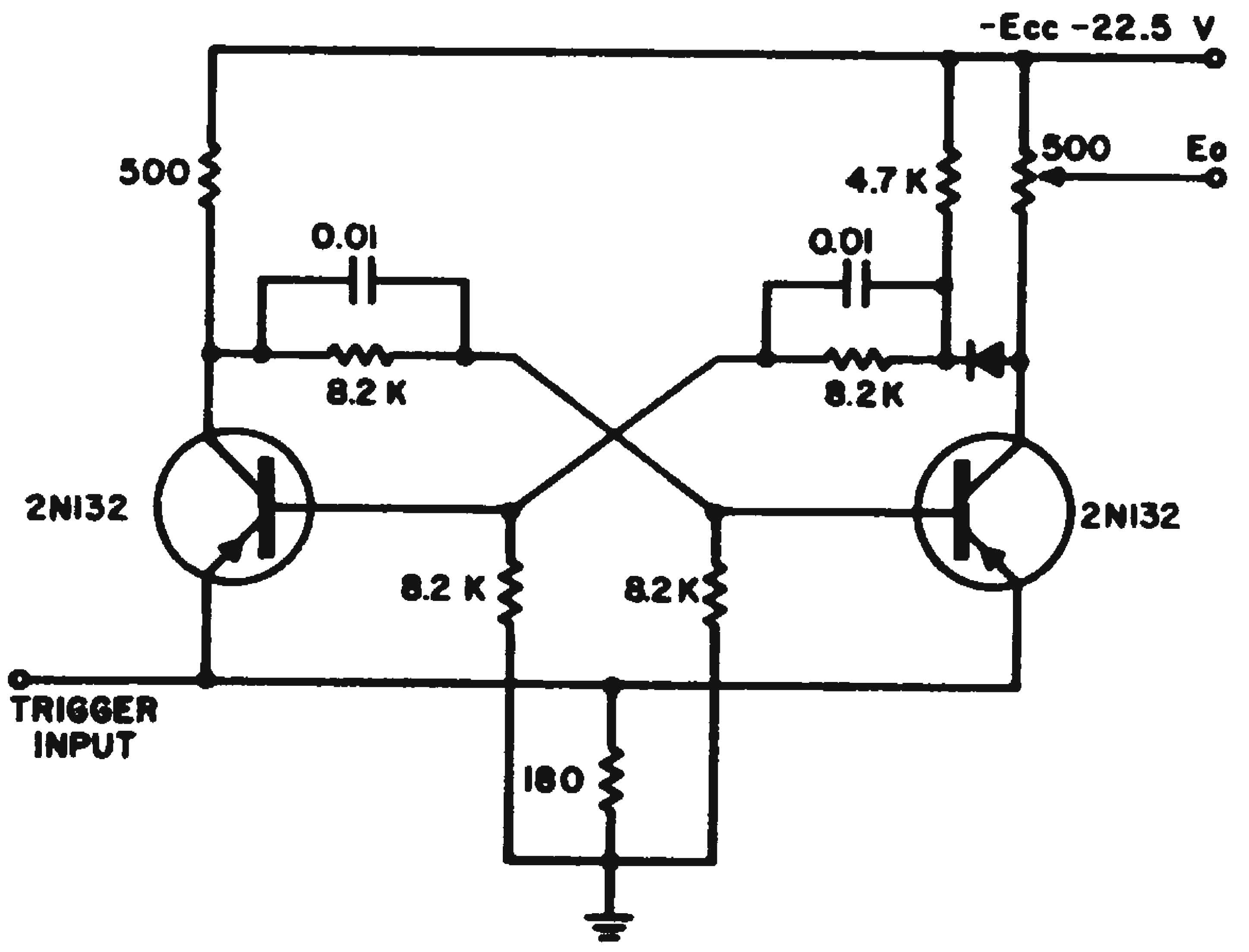

Zero reference in flip-flop is obtained by isolating base bias of one transistor through diode.

Roy A. McCarthy, engineering designer, Beckman Instruments, Fullerton, Calif.

Zener Diode Helps Set Blocking Oscillator Synch

When a free-running blocking oscillator is to generate timing pulses, but must be started by a master pulse, the master pulse itself can cause the blocking oscillator to give incorrect timing of the first interval. However, if a Zener diode is placed across the blocking oscillator capacitor, the capacitor is always driven down to the Zener voltage and the timing will not be disturbed.

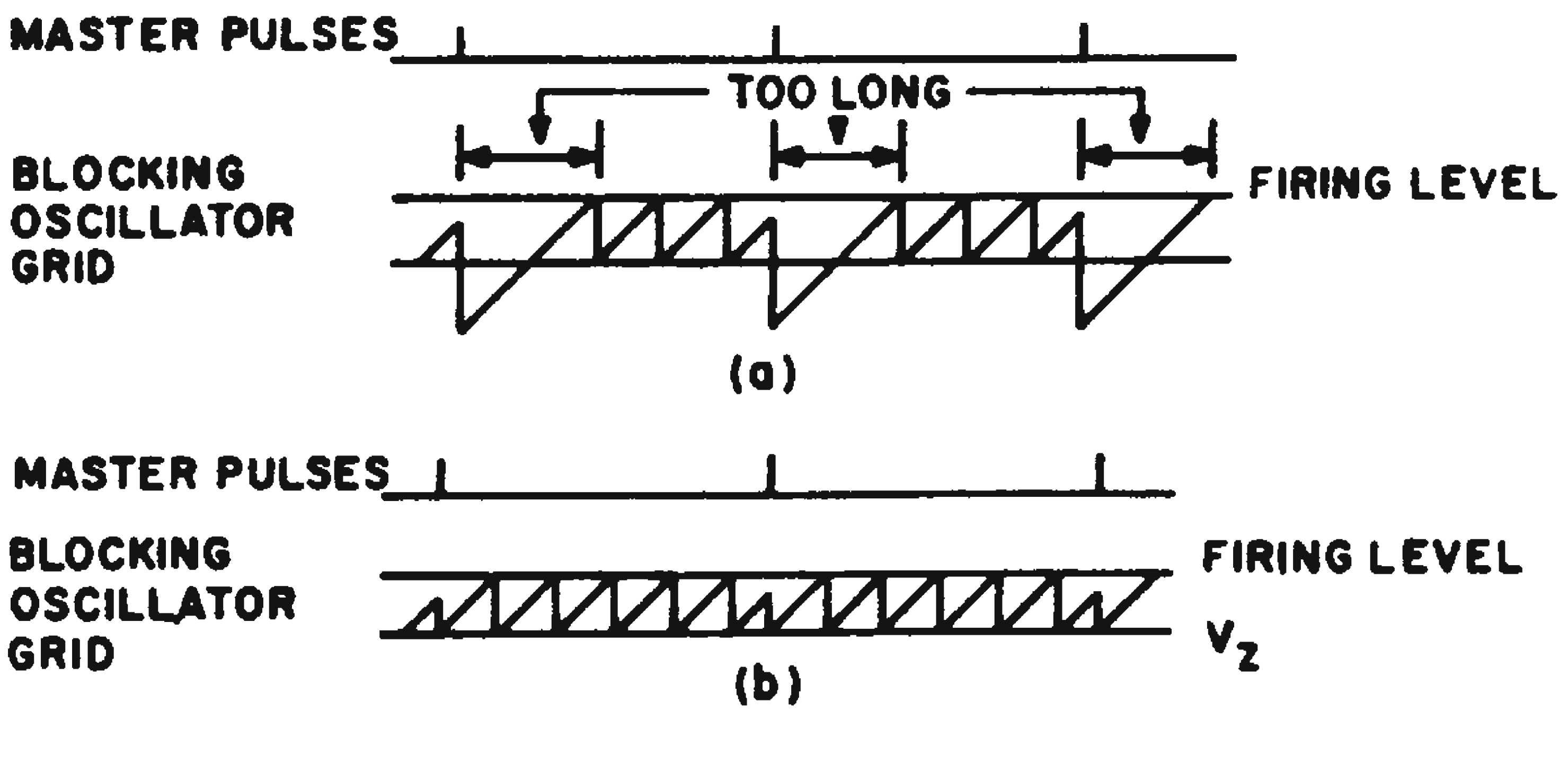

Pulse intervals of blocking oscillator output are made equal by adding Zener diode across circuit capacitor. (a) Circuit without Zener; (b) circuit with Zener.

E. R. Roeschlein, electronic engineer, U. S. Naval Avionics Facility, Indianapolis, Ind.

Ring Multi Generates Fast, Variable Output Pulses

With only one transistor per stage, the ring multivibrator circuit, shown in the figure, can generate fast, sequential pulses of variable widths. The basic circuit can be repeated any number of times, giving consecutive outputs suitable for sampling gate drivers, delayed sequential triggers, time-sharing control circuits, etc. Power consumption is low because only one stage conducts at a time.

Each stage is basically a constant-current, nonsaturating circuit providing negative output pulses. The RC combination in the transistor base determines pulse width. Pulse width may vary as much as 3 to 1 for consecutive outputs, without any noticeable effect on the collectors. Fast transistors in the circuit can yield speeds of less than 100 nsec.

Circuit operation is as follows: As each transistor finishes its conducting period and returns to the 12-v level, its collector produces a positive transient. This positive swing, coupled to the following base, turns on the next stage. The sequence can be made repetitive by coupling the last stage back to the first. Various load conditions can be accommodated by adjusting the emitter and collector resistors. By keeping the gated transistor on, the individual holding gates can stop the cycle without prematurely interrupting the sequence.

John A. MacIntosh, Application Engineer, Fairchild Semiconductor Corporation, Mountain View, Calif.

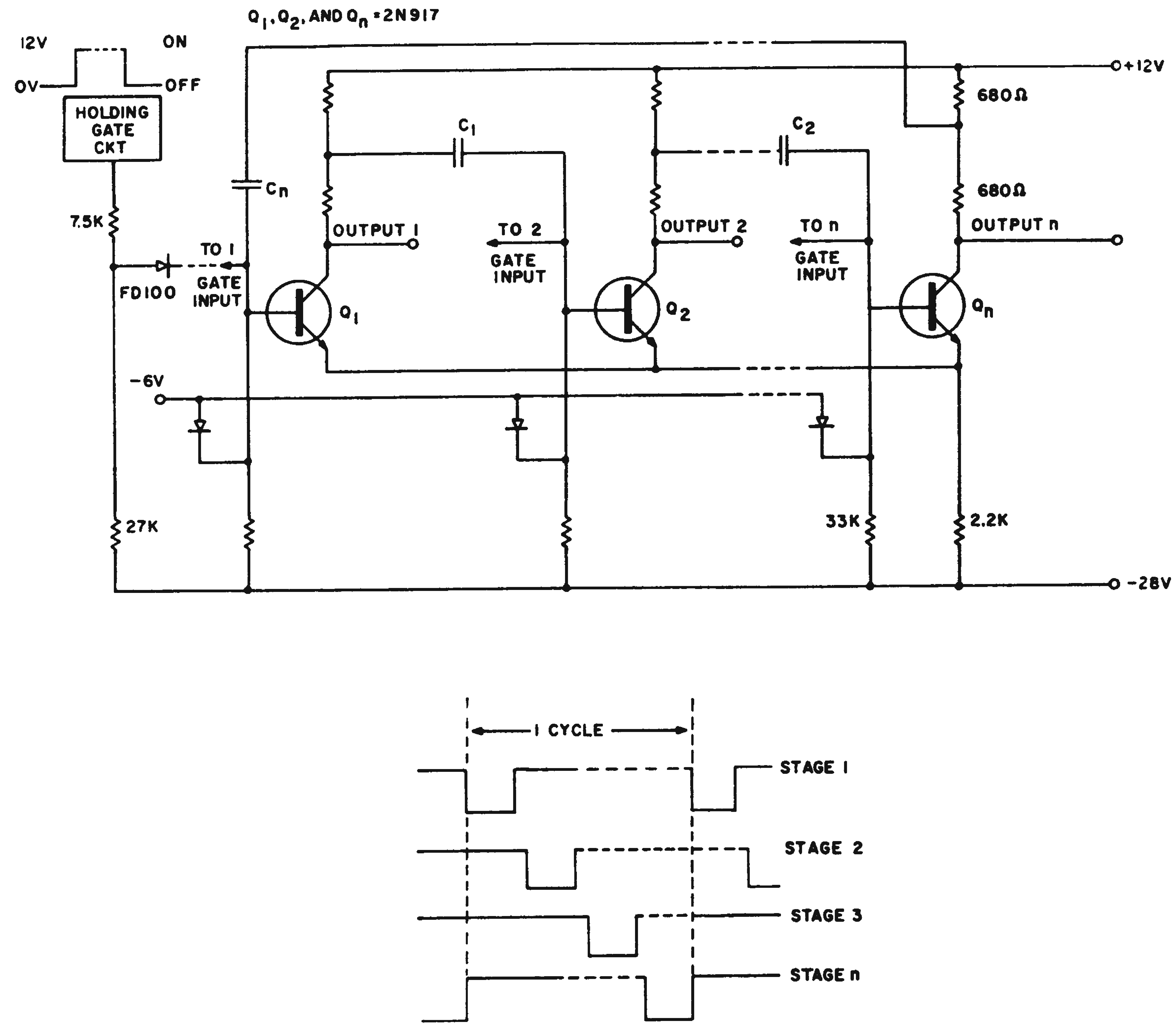

Ring multivibrator produces sequential output pulses whose widths are independently variable.

Voltage Control Starts Free-Running Multivibrator

The circuit shown in the illustration provides a simple method of starting a free-running multivibrator. If the multivibrator is used where its output cannot be shorted, it can stall only at the moment power is applied. Both transistors then may saturate.

At low E_s, I_b is reduced more than I_c because V_{BE} becomes significant. In addition, h_{FE} is low at low currents. If E_s rises slowly when power is first applied, neither transistor can saturate for a while. Meanwhile, the multivibrator will oscillate because of positive feedback around the loop. Once oscillating, E_s can rise to normal operating level. A large decoupling capacitor, C_s, will cause E_s to rise slowly. Since good equipment design requires a liberal use of decouplers, there is no penalty for additional components.

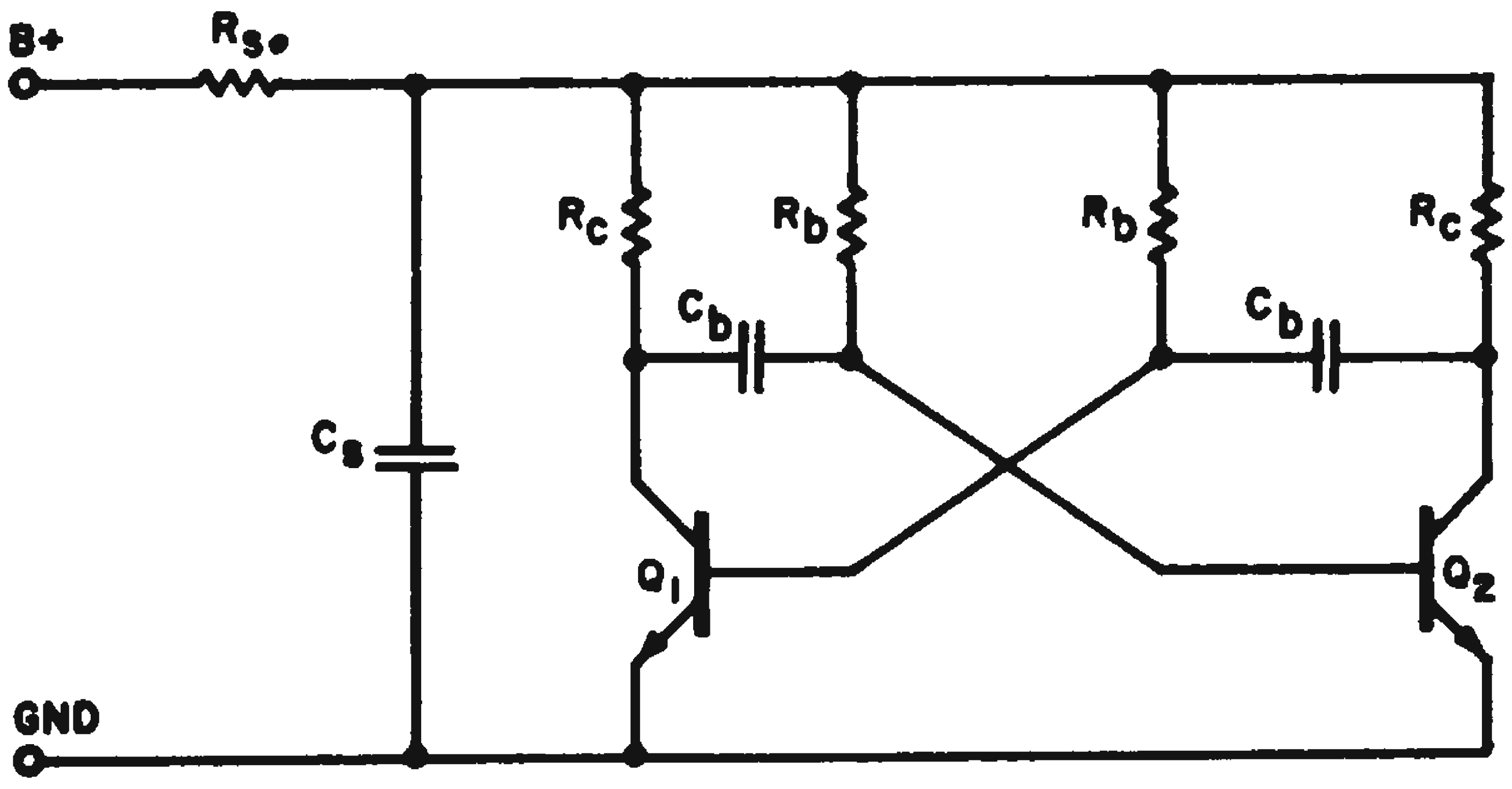

Slow voltage rise assures nonsaturation of transistors in free-running multivibrator.

The value of R_c depends upon load and optimum operating point for the transistors. Ratio R_c/R_b should be less than h_{FE} min, and R_bR_c should be approximately f. R_sC_s should be greater than $10R_bR_c$.

Cameron Burley, research engineer, Lockheed Missile and Space Co., Sunnyvale, Calif.

Current-Mode Flip-Flop Has Dual Voltage Outputs

The main advantage of the vertical current-mode flip-flop shown is that two outputs can be obtained at widely separated voltage levels.

In essence, the vertical current-mode flip-flop is one half of a symmetrical current-mode flip-flop.[1] The transistors operate out of saturation, and are either both on or both off. Resistors R_7 and R_8 serve to reduce the power dissipation in the transistors. They are unnecessary if power is not a problem.

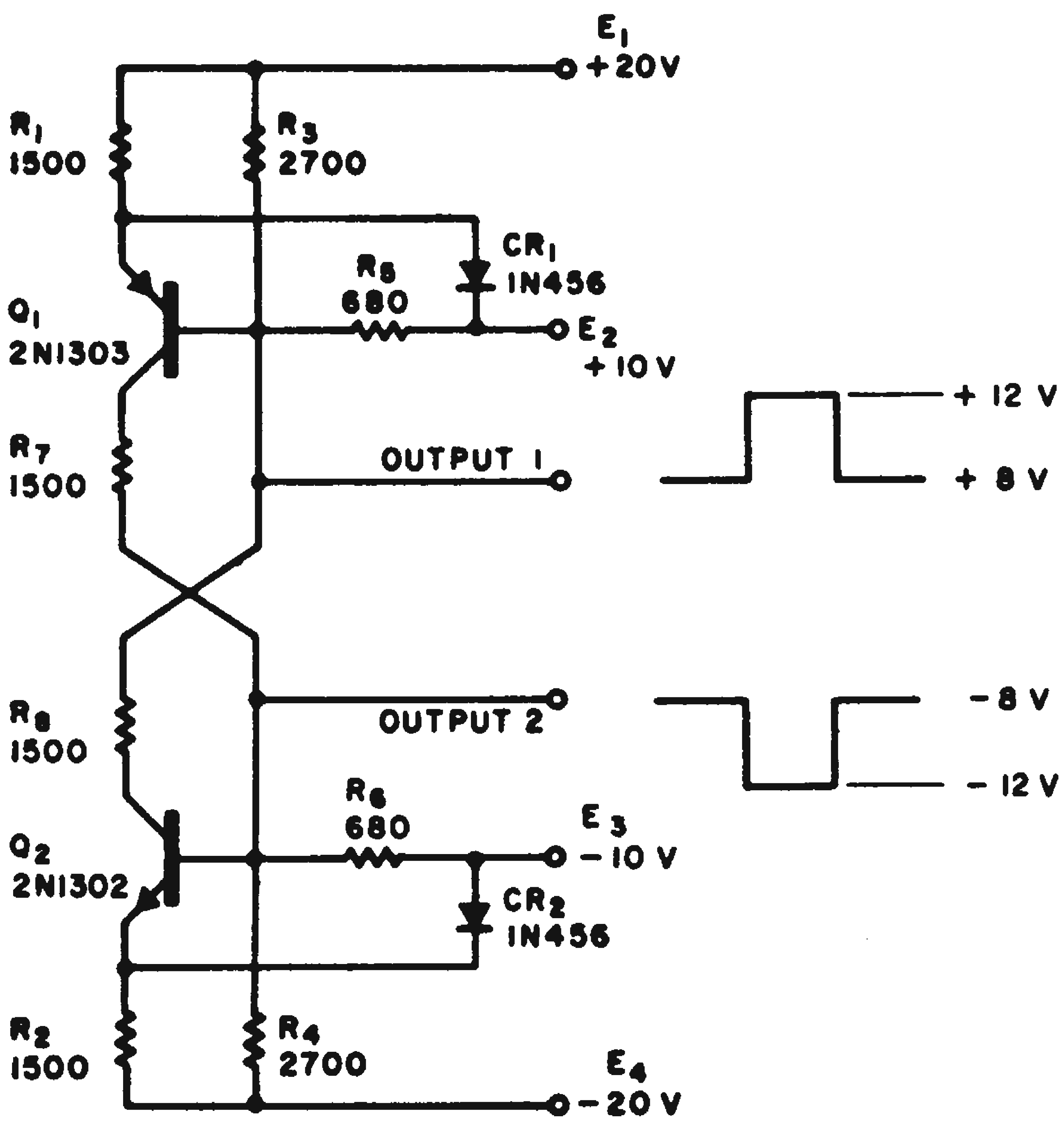

Positive and negative voltage levels are available at dual-mode flip-flop output.

Means for triggering are not shown since there are many possibilities, and the choice depends on the particular application.

Richard W. Hofheimer, project manager, Non-Linear Systems, Inc., Del Mar, Calif.

Reference

1. Richard W. Hofheimer, "Symmetrical Current-Mode Flip-Flop," *Electrical Design News*, June, 1961.

Shockley Diode Modernizes Neon-Tube Oscillator

An easily-assembled source of pulses sometimes is needed when available test equipment is being used. The circuit on p 207 shows a simple, but by-no-means new circuit that we found useful in such cases. It is a modernized version of the classic neon-tube oscillator, built around a Shockley four-layer diode.

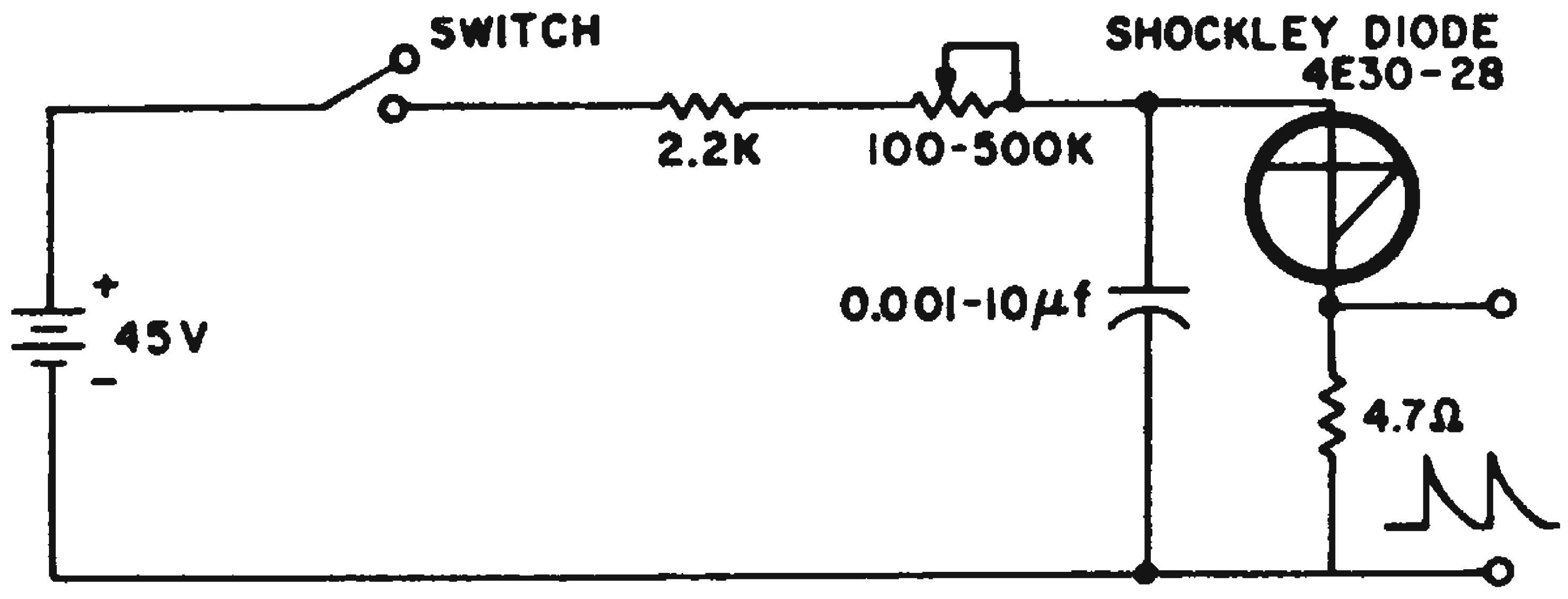

Easily-assembled pulse source is built around Shockley four-layer diode.

The battery voltage can be any convenient value, consistent with the firing voltage of the four-layer diode. Because of the very low leakage of the diode, the potentiometer can be as high as about 500 K. Thus, a frequency range of about 250:1 is easily obtainable. The pulses have a very fast rise time because of the fast turn-on time (0.1 μs) of the 4E series diode. The diodes, rated for 10-amp peak-pulse current, provide a very low-impedance source for the pulse output across the 4.7-ohm resistor.

This pulse generator can also be used for receiver testing, since it has a very broad spectrum and can be heard from vlf through vhf.

R. W. Johnson, Consulting Engineer, R. W. Johnson Co., Anaheim, Calif.

Tunable Multivibrator Starts Reliably

The circuit shown here is an oscillator tunable from 200 to 300 kc. The most troublesome feature of transistor multivibrators is an occasional failure to start, because both transistors reach saturation simultaneously. Deriving the base supply voltage in the manner shown prevents this and, as a small bonus, clips the top portion of the collector waveform, where the voltage would otherwise be rising rather slowly. Tapping the cross-coupling capacitors up on the collector load resistors yields full benefit from the clipping, but is otherwise nonessential. It should be possible to stabilize the frequency against supply voltage change by shunting a Zener diode across the potentiometer circuit, but this was unnecessary in the present application.

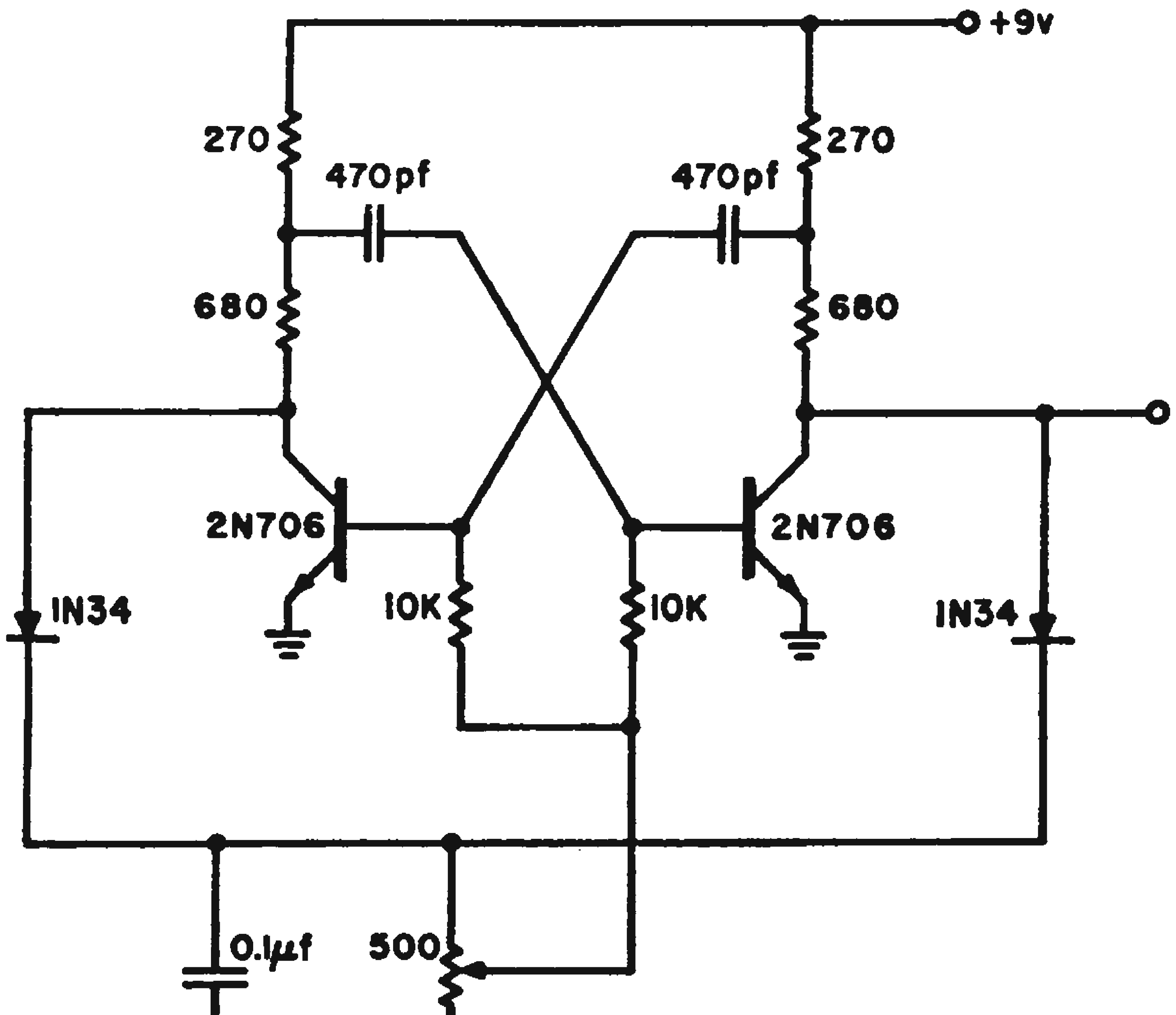

Simultaneous saturation of transistors is prevented by obtaining base bias through diode network.

M. W. Egerton, Jr., Towson Laboratories, Inc., Towson, Md.

Voltage-Controlled Oscillator Exceeds 2-to-1 Frequency Range

To obtain a wide tuning range, the oscillator shown here uses the Butler connection to put series tuning in the feedback path. A silicon capacitor (varactor)—the variable element—is controlled by a dc bias voltage.

Coil L_1 is adjusted to produce a sinusoidal oscillation and L_2 may be adjusted to produce a 1.6-mc output with 4 v at the control input. Under these conditions, the frequency deviation is from 1.1 mc when the control voltage is zero to 2.4 mc with 30 on the control input.

Advantages of this oscillator include a low output impedance and simple adjustment. The control impedance is limited primarily by the required response time. Frequency sweep rates longer than 100 μsec could be obtained through a higher value of input resistor.

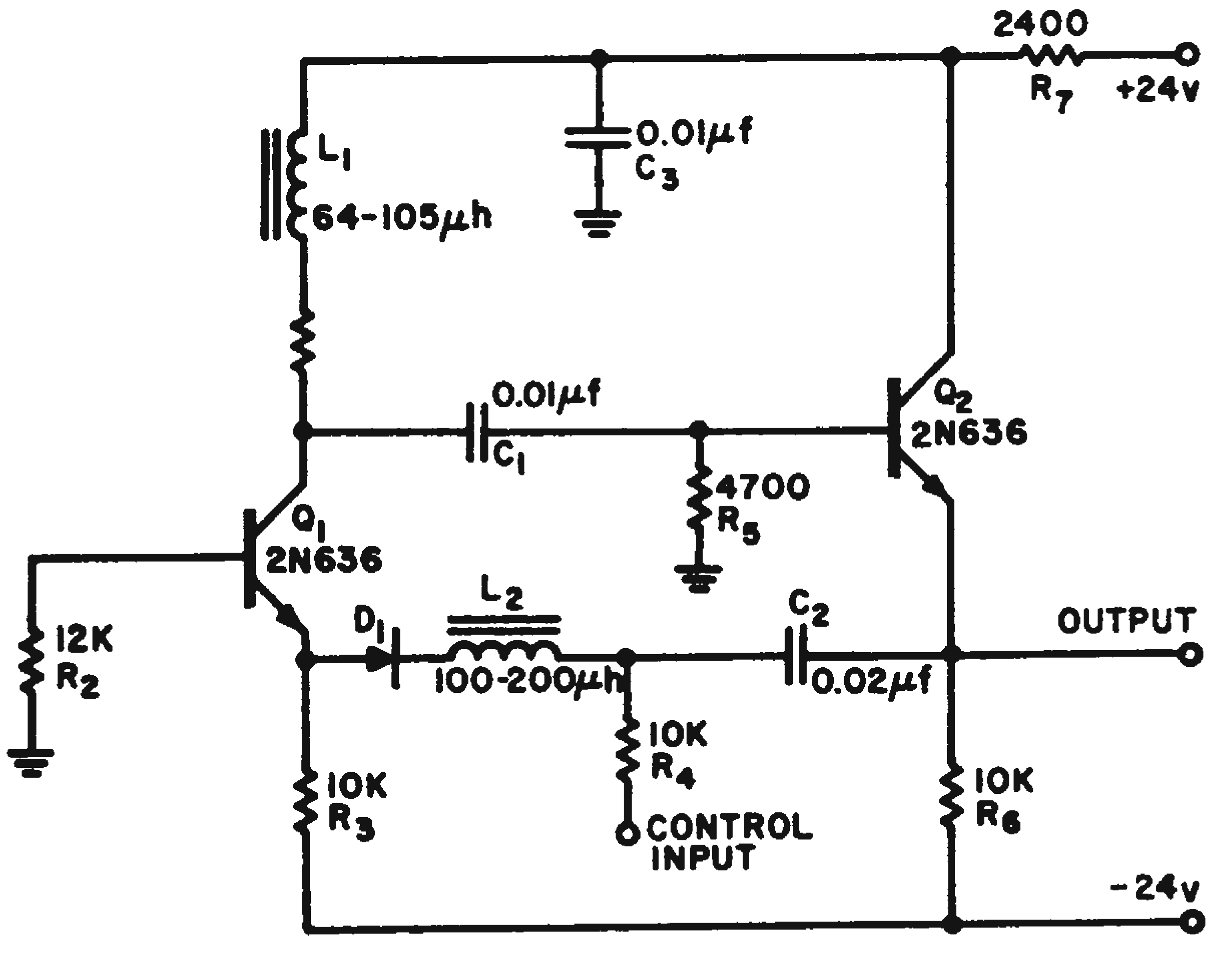

Using component values shown, output frequency can be varied from 1.1 mc to 2.4 mc.

Charles Turner, electronic engineer, Sanders Associates, Inc., Nashua, N. H.

Extending Operating Range Of Unijunction Timing Circuits

When accuracy requirements are not too severe, unijunction transistors are often used as low-frequency pulse generators. The simplest form of pulse-generating circuit is shown in Fig. 1. This circuit is limited at the low-frequency end, however, and cannot perform reliably at rates much slower than about one pulse every 10 seconds.

The addition of a single low-leakage, high-gain 2N930 transistor can increase timing intervals by about a factor of 10. Fig. 2 shows how the transistor is connected. This configuration has several advantages: The interval between pulses can be extended to more than two minutes; smaller size capacitors can be used where space is at a premium, yet timing intervals can be greater than for the configuration of Fig. 1; current consumption is not increased by the addition of the second transistor. In addition, stability of pulse repetition frequency is within 2 per cent over extended periods of time and wide temperature ranges.

The gain, of course, comes from the emitter-follower current multiplication of the added transistor. Values of R and C can be much greater than in the conventional circuit. Theoretically, these values are limited only by the leakage current of the capacitor and the added transistor.

G. W. Cantrell, electronics engineer, Air Force Special Weapons Center, Kirtland Air Force Base, N. M.

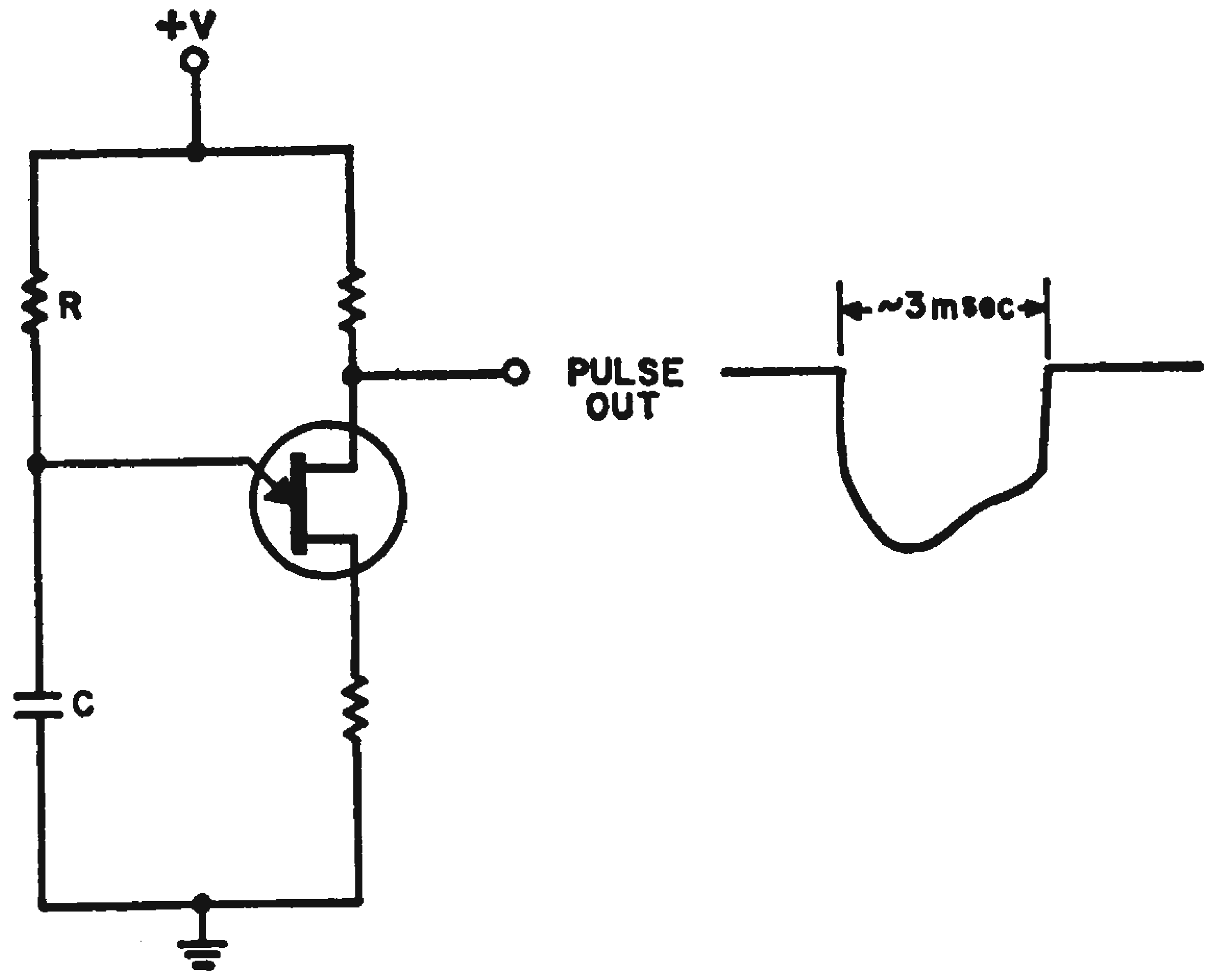

Fig. 1. Simple unijunction timing circuit cannot be used reliably at pulse rates lower than 10 pps.

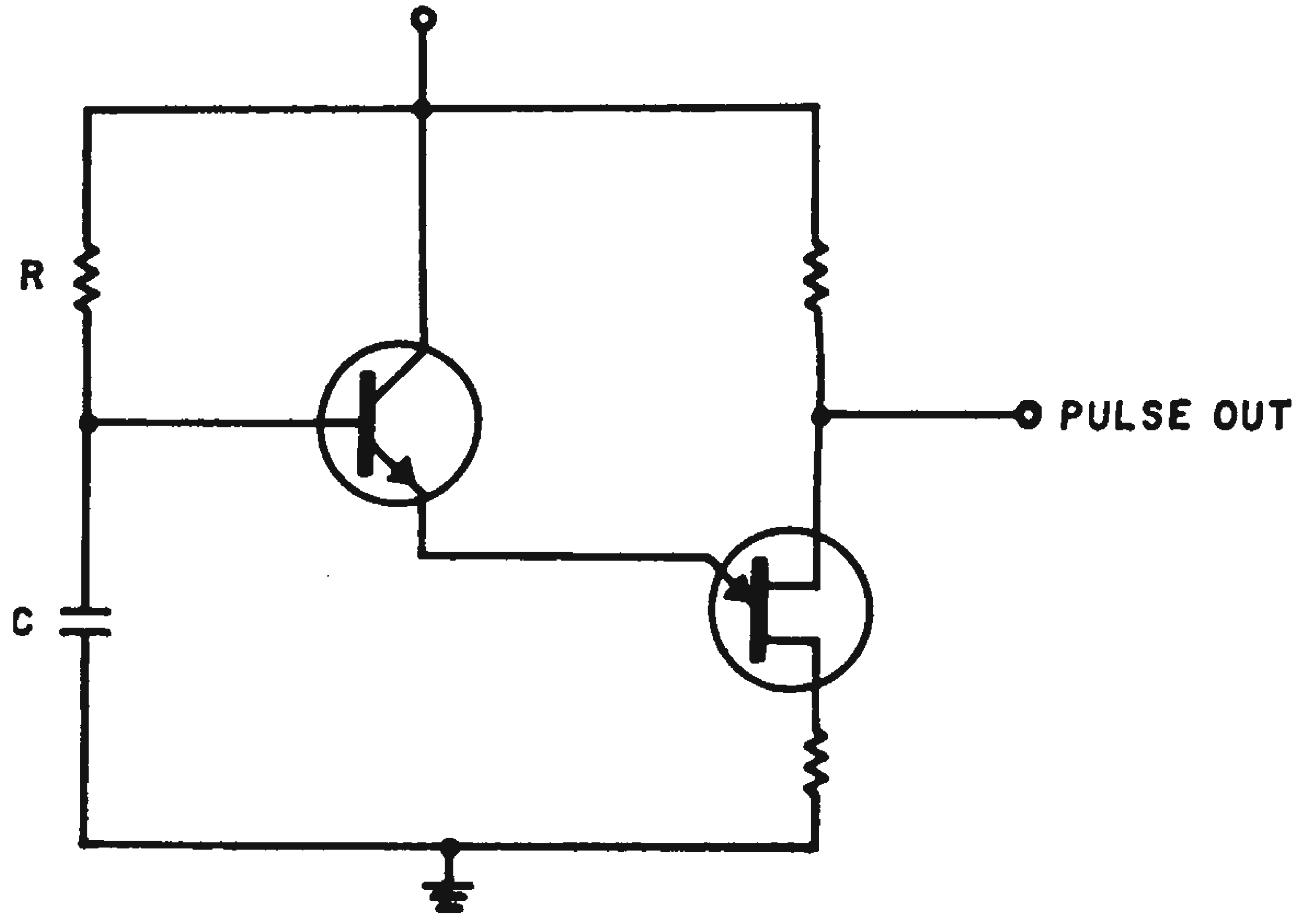

Fig. 2. Improved low-frequency timing circuit can provide pulse intervals as long as two minutes.

Unijunction Oscillator Has Negative Pulse Output

A simple modification of the conventional unijunction oscillator provides a negative output with respect to ground with minimum components. Capacitor *C* determines frequency and decay rate of output. Increasing *C* decreases frequency and increases pulse width. *C* charges through diode D_1 at a rate determined by R_1 until the emitter junction becomes forward biased. Diode D_2 prevents the changing current of *C* from flowing through R_L.

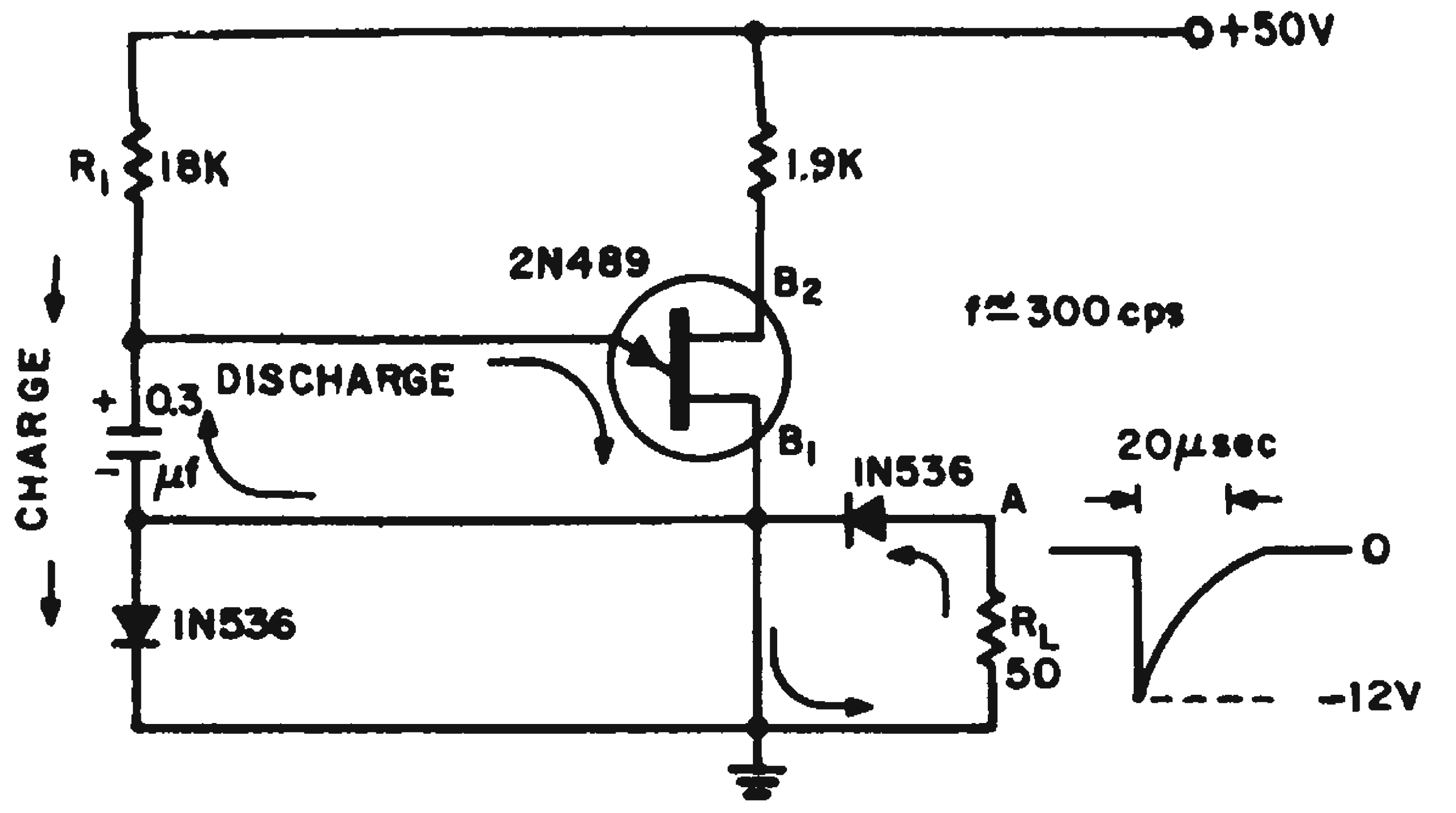

Output pulses of unijunction oscillator at Point A are negative with respect to ground. Increasing C decreases frequency and increase pulse width. Frequency increases with a decrease in R_1.

When the emitter current is sufficient, regeneration occurs and the unijunction is fully on. Capacitor C then discharges through the emitter-base$_1$ junction through R_L and D_2. This capacitor discharge current appears as the output pulse across R_L. Diode D_1 prevents the discharge current from being short-circuited to ground.

J. Paul Vergez, Jr., applications engineer, Texas Instruments Inc. Dallas, Tex.

Monostable Multivibrator Has High Run/Recovery Ratio

Recovery time can present a major problem in monostable multivibrator applications. With the conventional type, recovery time is about the same length as the run time. Usually, transistors with low V_{be} breakdown ratings cannot be used.

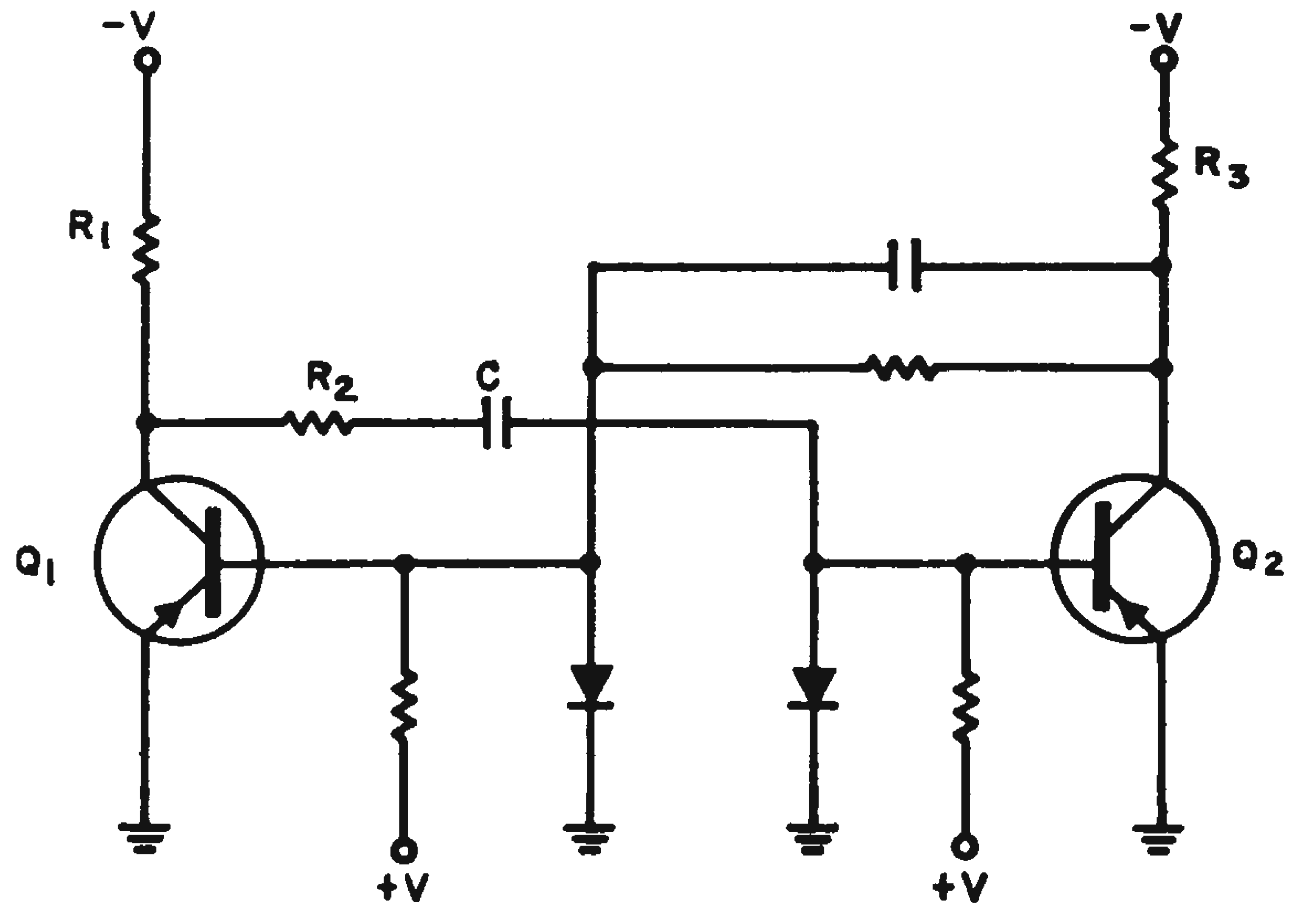

Monostable multivibrator has run/recovery time ratio that is essentially independent of transistor beta.

The circuit shown here eliminates both of these problems at the same time. Run/recovery time ratios of 10^6 are possible and ratios of 10^4 are easily obtained.

Run time is given by the following approximate equation:

$$t = (R_1 + R_2)C\ ln\ \frac{\beta_2 R_3}{R_1 + R_2}$$

The run/recovery time ratio is proportional to $(R_1 + R_2)/R_2$. As can be seen from the equation, if the quantity $\beta_2 R_3/\ (R_1\ +\ R_2)$ can be made large with respect to 1, the time is essentially independent of β_2.

Jerry J. Norton, senior project engineer, Orbitronics, Inc., Denver, Colo.

Circuit Modification Speeds Square-Wave Rise Time

One of the major limitations of the traditional free-running multivibrator is its inability to produce a true square-wave output. Generally, if a square-wave output is desired, many additional components are needed. A typical multivibrator and its output waveforms are shown in Fig. 1.

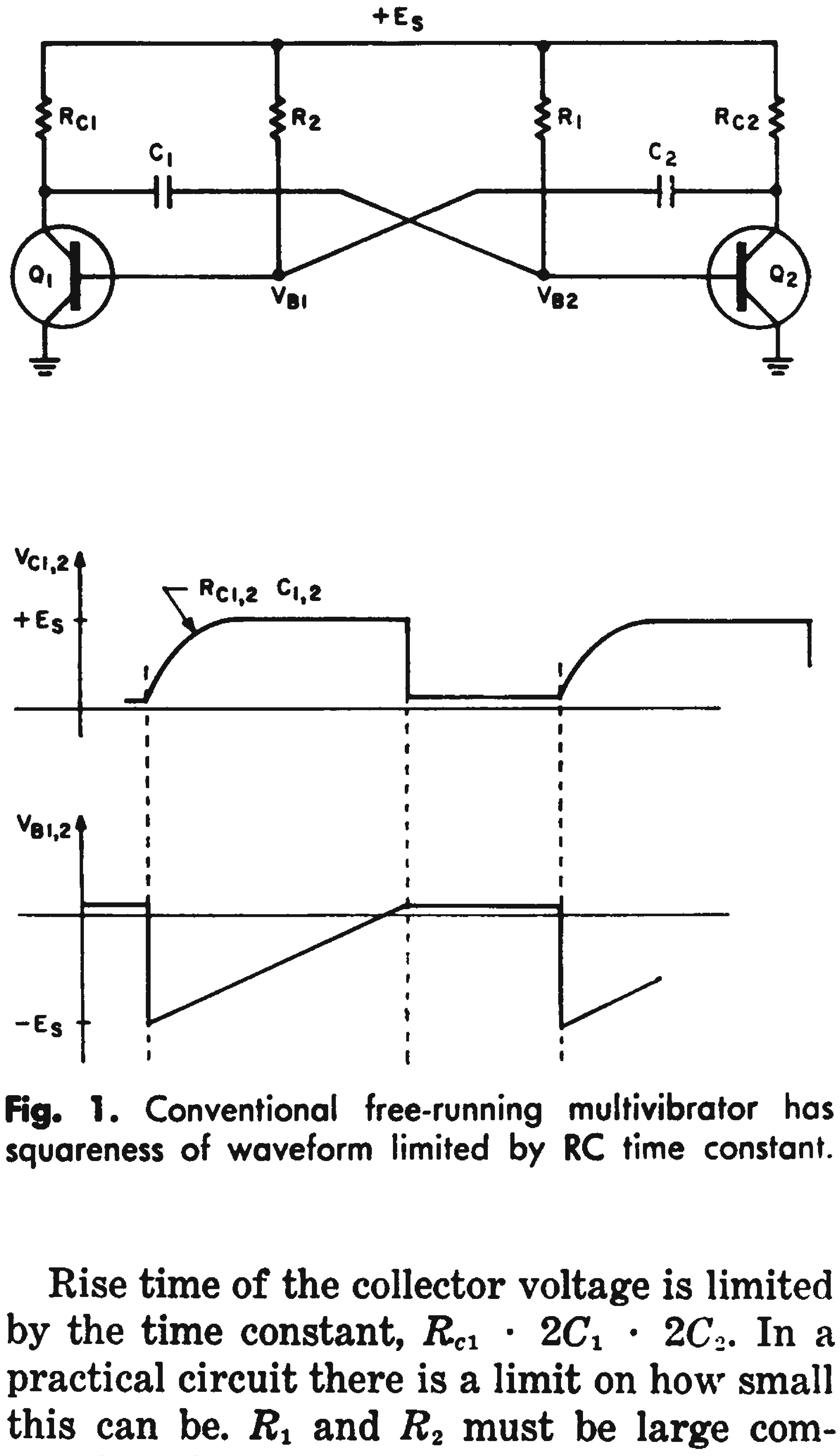

Fig. 1. Conventional free-running multivibrator has squareness of waveform limited by RC time constant.

Rise time of the collector voltage is limited by the time constant, $R_{c1} \cdot 2C_1 \cdot 2C_2$. In a practical circuit there is a limit on how small this can be. R_1 and R_2 must be large compared to the ON base-input resistance. Also, C_1 and C_2 must be large compared to the OFF input and output transistor capacitances.[1]

A circuit that solves this problem with the addition of only four components, is shown in Fig. 2. Operation is quite similar to the circuit of Fig. 1. The time T_1 is computed as follows:

$$V_{B2} = 2E_S(1 - \epsilon^{-t/R_1C_1}) - E_S$$

Thus when $V_{B2} = 0$

$$T_1 = R_1 C_1 \ln (2 E_s/E_s = 0.69 R_1 C_1$$

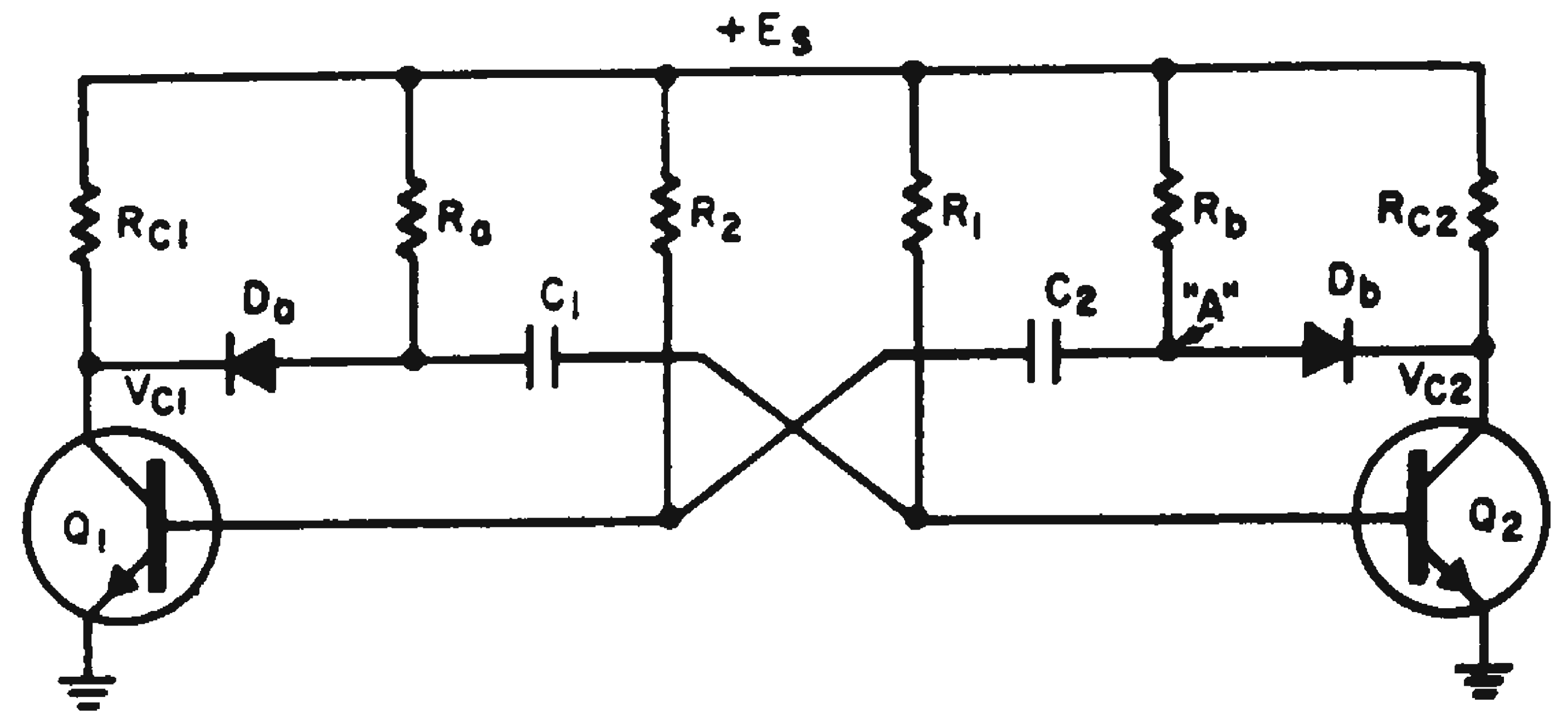

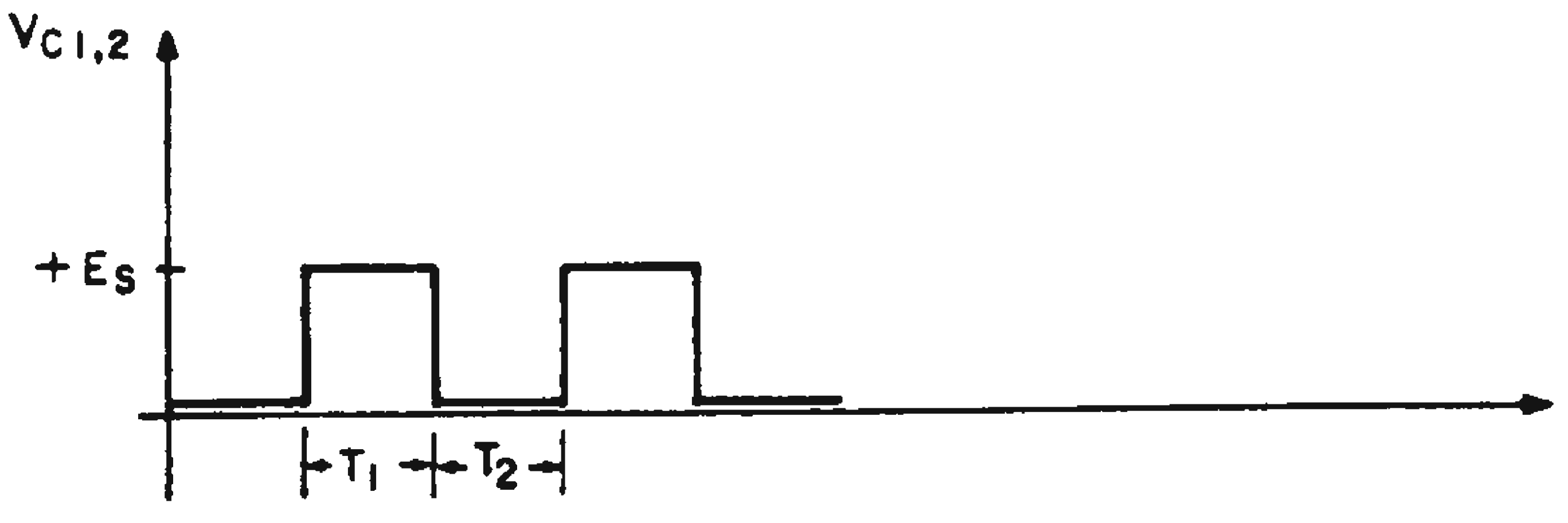

Fig. 2. Rise time of multivibrator waveform is speeded by charging C_1 and C_2 through resistors R_a and R_b.

Also, $T_2 = 0.69\, R_2 C$;

Therefore, the frequency of the square wave generator is

$$f = 1/(T_1 + T_2)$$

The explanation of the collector-voltage wave shape is as follows: Ordinarily, the voltage at V_{c2} is very nearly zero when Q_2 is on; thus, when Q_2 turns off the voltage rises according to the $R_{c2}C_2$ time constant, to the value of the supply voltage, $+E_s$. However, in the new circuit, capacitor C_2 is charged through R_b. The diode, D_b, prevents the charging current from going through R_{c2}. Therefore, the instant Q_2 turns off, the voltage at V_{c2} is the supply voltage. The voltage at point A which is initially zero, charges through the $R_b C_2$ time constant to the supply value.

The "squareness" of the wave at V_{c1}, V_{c2} is limited only by the transistor and diode characteristics.

This circuit has been built in versions that produce square waves of a few cycles to several Mc.

Reference

1. Richard B. Hurley, *Junction Transistor Electronics*, pp 420-422, John Wiley & Sons, New York, London: 1958.

R. O. Gregory, consultant, J. C. Bowers, group engineer, McDonnell Aircraft Corp., St. Louis, Mo.

One-Shot Generator Gives Variable Pulse Width

When a variable-width pulse is needed from a one-shot, either R or C may be varied. In the circuit of Fig. 1, the value of C is between 50 and 100 μf for pulse widths between 200 and 400 msec. Since variable capacitors are not made in these values, the only alternative would be to vary R. This poses several problems, since, in a worst-case design, the value of R is selected for the minimum low-temperature base current required to keep Q_1 in saturation. Varying R around the design value could cause Q_1 to burn out from excessive base dissipation or from not being saturated.

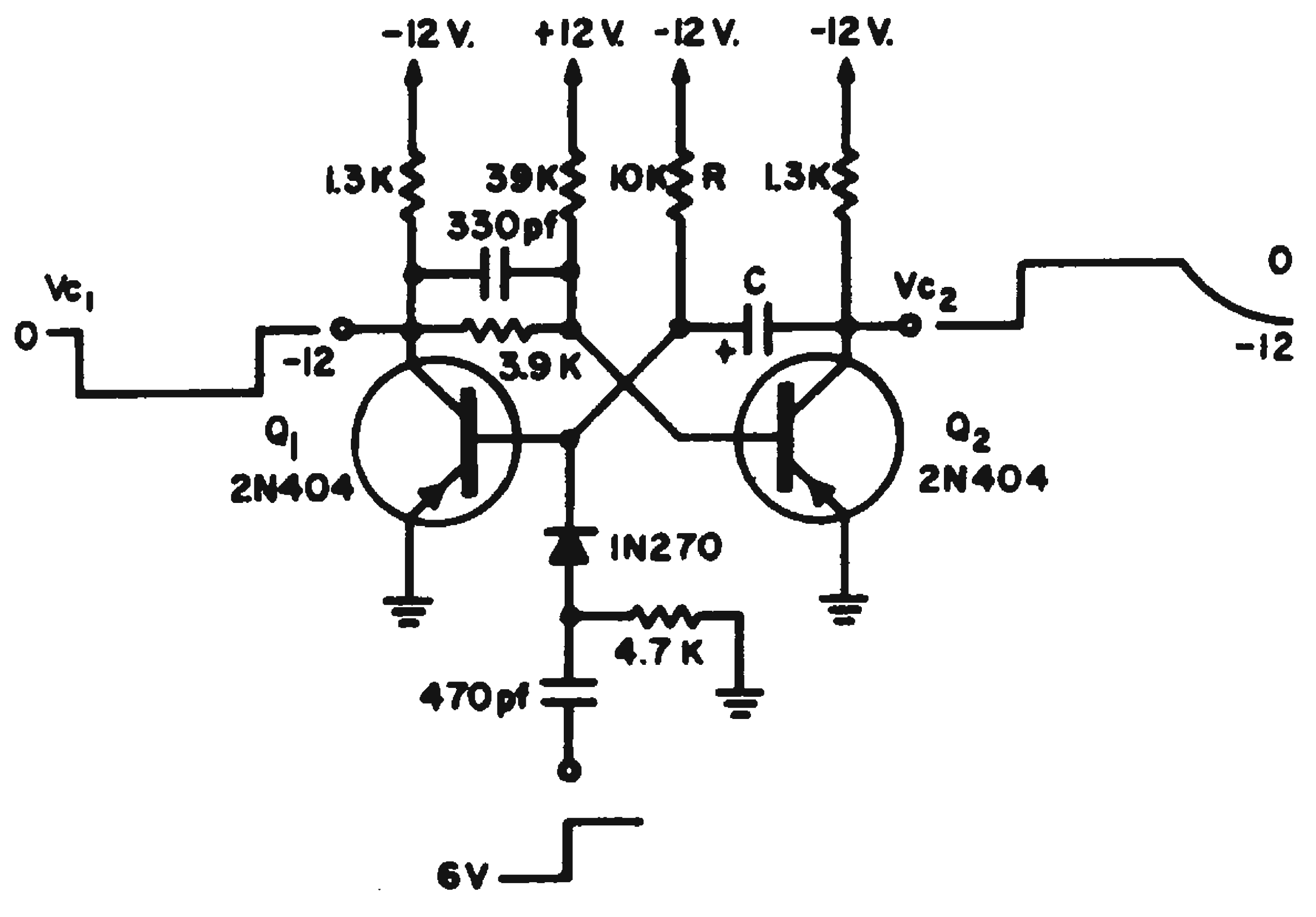

Fig. 1. Values for a variable C in typical one-shot multivibrator become impractical for pulse widths in the 200- to 400-msec range.

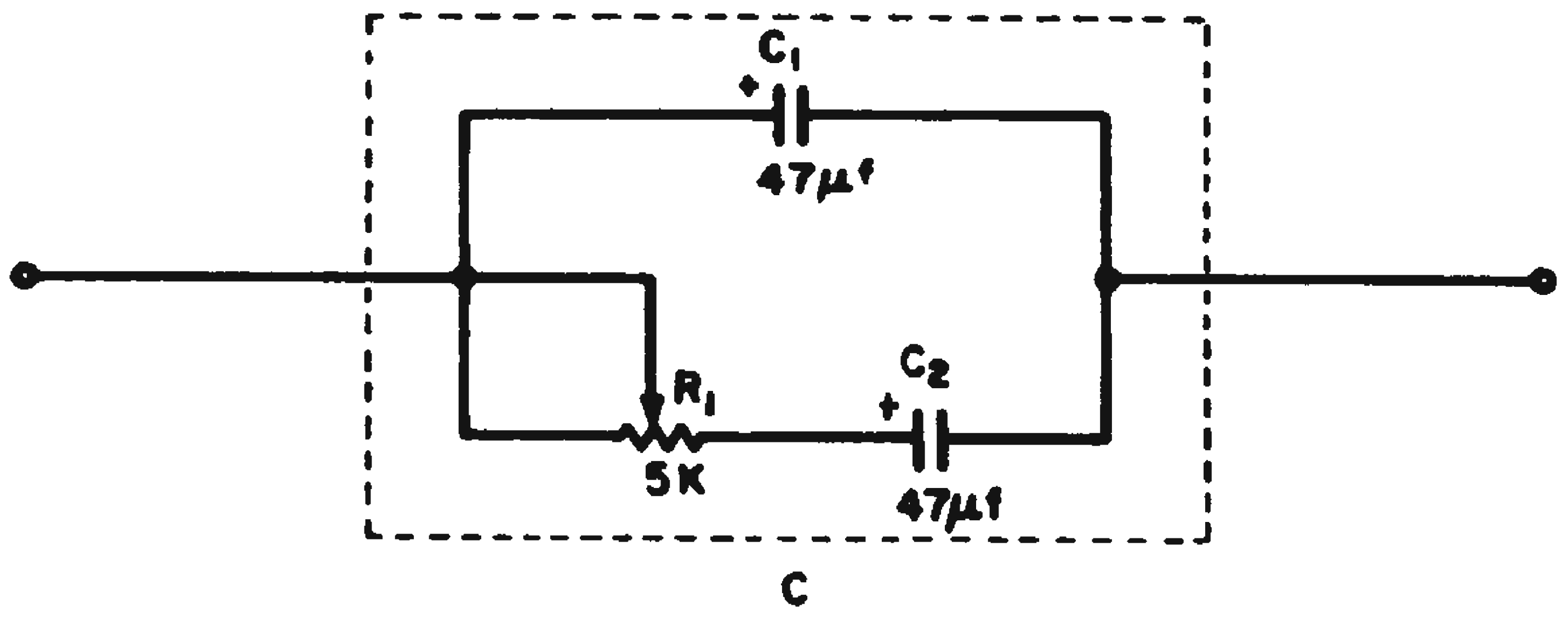

Fig. 2. Potentiometer provides control of capacitance without using variable capacitor.

To solve the problem, capacitor C is replaced by the configuration shown in Fig. 2. As potentiometer R_1 is varied, the effective capacitance is varied from $C_1 + C_2$ to approximately C_1. This technique does not interfere with the dc temperature stability.

Typical values are given for a one-shot with output pulse width variable from 200 to 400 msec. The circuit given will operate from a 6-v, 1-μsec step input. The output rise-time will be less than 0.5 μsec.

Michael I. Neidich, electronic design engineer, Sanders Associates, Geospace Electronics Div., Plainview, N. Y.

One-Shot Multivibrator Allows Voltage Controlled Pulse Width

Here is a circuit that produces a pulse for each trigger received, with the width of the pulse being proportional to the level of a control voltage. The two transistors are quite uncritical as to characteristics, and are connected in a complementary arrangement to conserve battery power.

Initially, both are off, and the capacitor has zero charge. A trigger on Q_1 base turns both transistors on, due to positive feedback through C and R. When C becomes fully charged, Q_1 cuts off, cutting off Q_2. Then C discharges through Q_2 load resistor.

Linearity of output pulse width to control voltage is approximately 1 per cent over a 5-v range. The silicon diode in Q_1 emitter provides a slight reverse bias, enhancing temperature stability and over-all linearity.

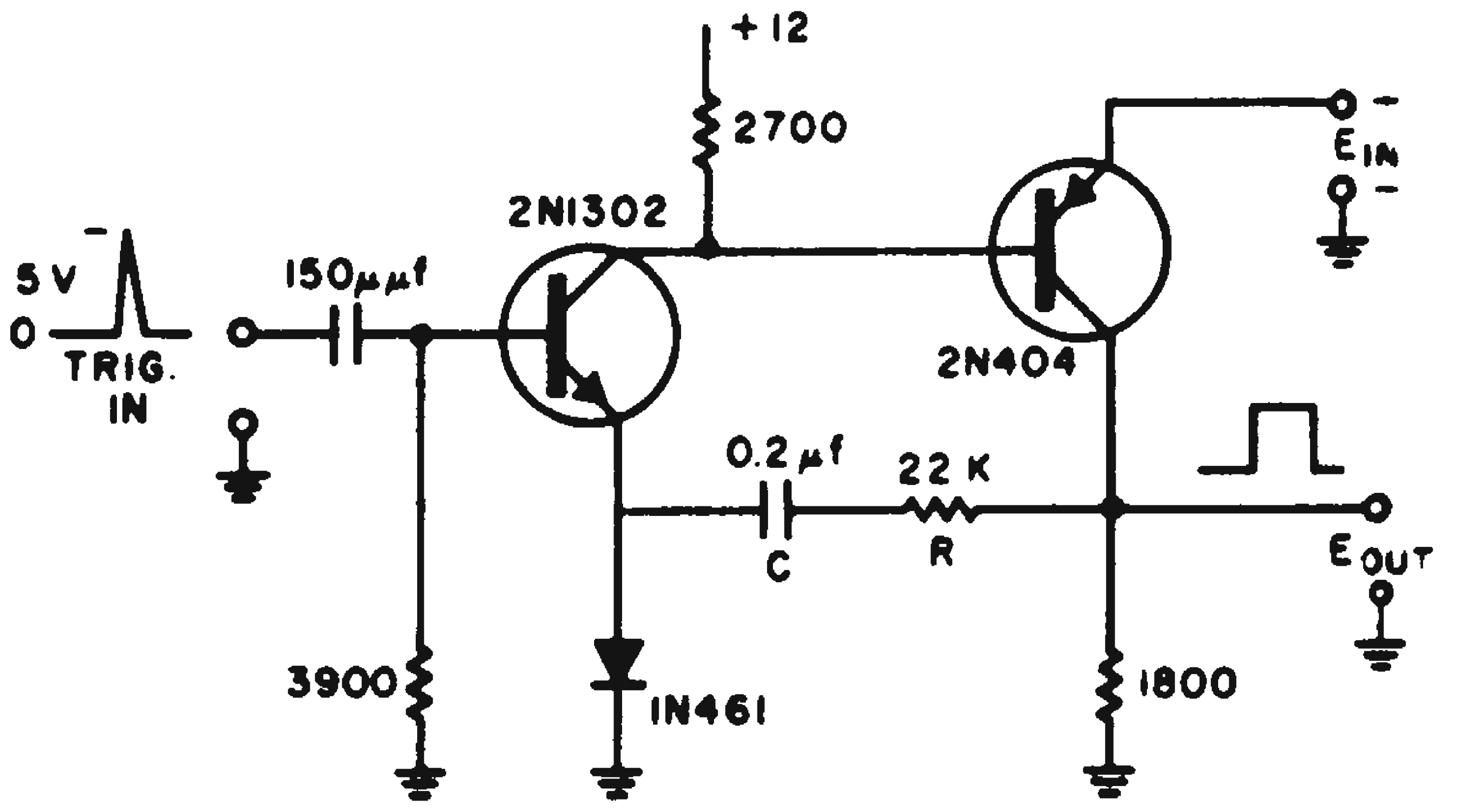

Pulse width output proportional to control-voltage amplitude has linearity better than 1 per cent.

John H. Porter, president, Portronics, Inc., Tarzana, Calif.

Field-Effect Transistors Give Ultra-Linear LF Sawtooth

Field-effect transistors can be used to obtain an ultra-linear sawtooth at very low frequencies. The generator shown here can operate down to 0.01 cps. In this design, Crystalonics composite C640 field-effect transistors are used to provide a constant current to charge capacitor C. As the diode is back-biased during the charging cycle, the only load on the charging capacitor is the input of the FETs. These values are in the megohm range.

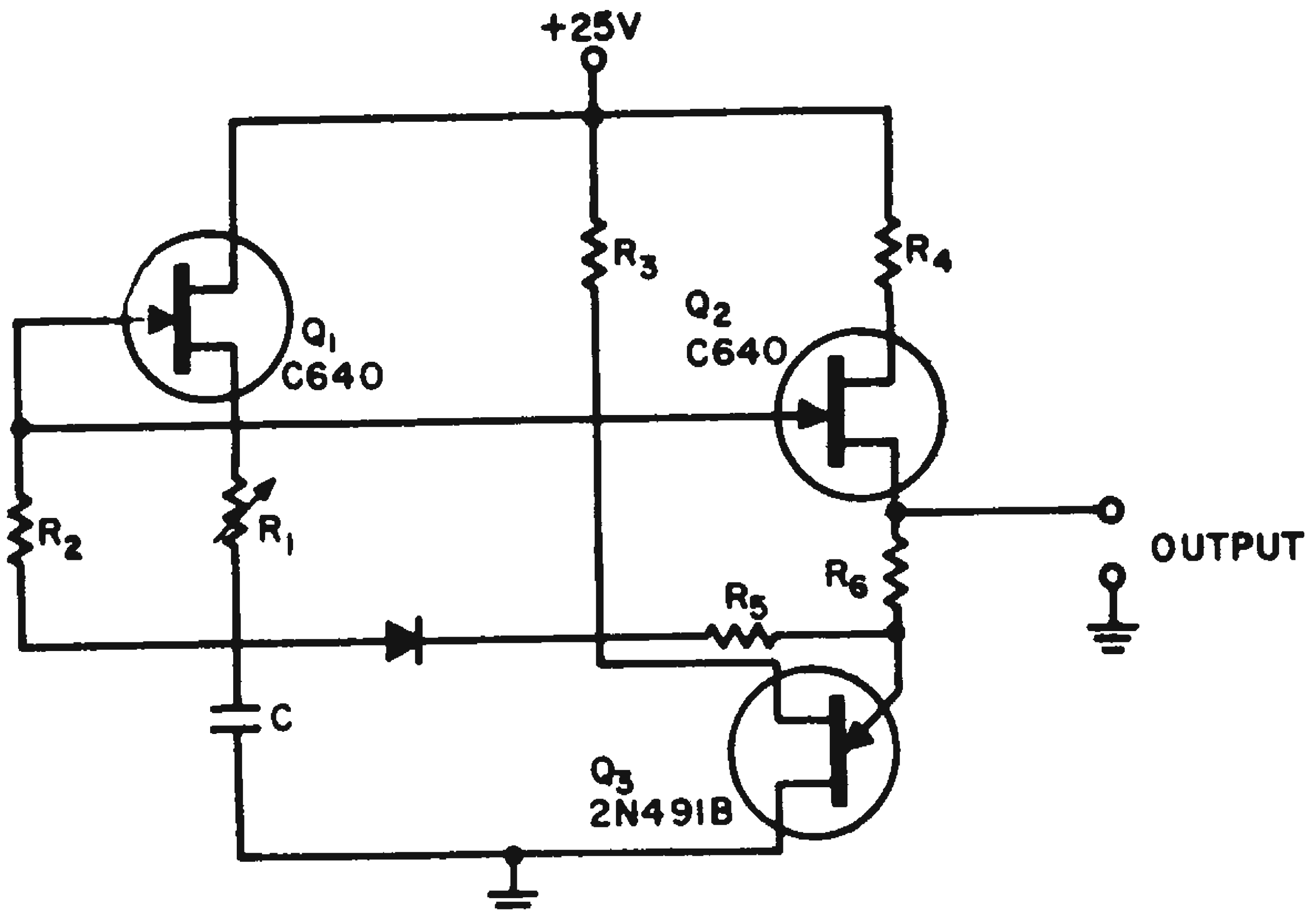

Frequencies down to 0.01 cps can be obtained from field-effect transistor generator.

The capacitor is discharged by the unijunction transistor through the diode. The diode prevents leakage current of the unijunction from loading the charging capacitor and the linearity of the circuit is limited principally by this leakage.

The frequency is controlled by potentiometer R_1. The output waveform varies from 4 to 12 volts and requires an emitter follower or other high-impedance circuit to minimize loading.

F. J. Murphree and J. H. Hammond, electronic engineers, U.S. Navy Mine Defense Lab., Panama City, Fla.

Unijunction Oscillator Gives 30-Sec Sweep

A slow, linear sweep of 1 to 30 seconds, for applications such as monitoring cardiac waveforms, can be obtained from the circuit shown in the diagram. No bootstrapping is used to obtain linearity. Instead, the circuit takes advantage of the constant-current collector characteristic of a transistor emitter-follower. The low-frequency incremental impedance looking into the collector is of the order of five megohms or greater. This presents a constant current charging source to capacitor C_1, resulting in a voltage ramp of high linearity (less than 1 per cent displacement error).

The emitter of the unijunction transistor (UJT) presents essentially an open circuit to C_1 until its peak-point voltage is reached. At this level, the UJT switches ON, discharging C_1 through R_5. R_5 limits the peak discharge current through the unijunction. As the discharge current falls below the valley point of the unijunction emitter characteristic, the UJT switches OFF and the sweep cycle begins again.

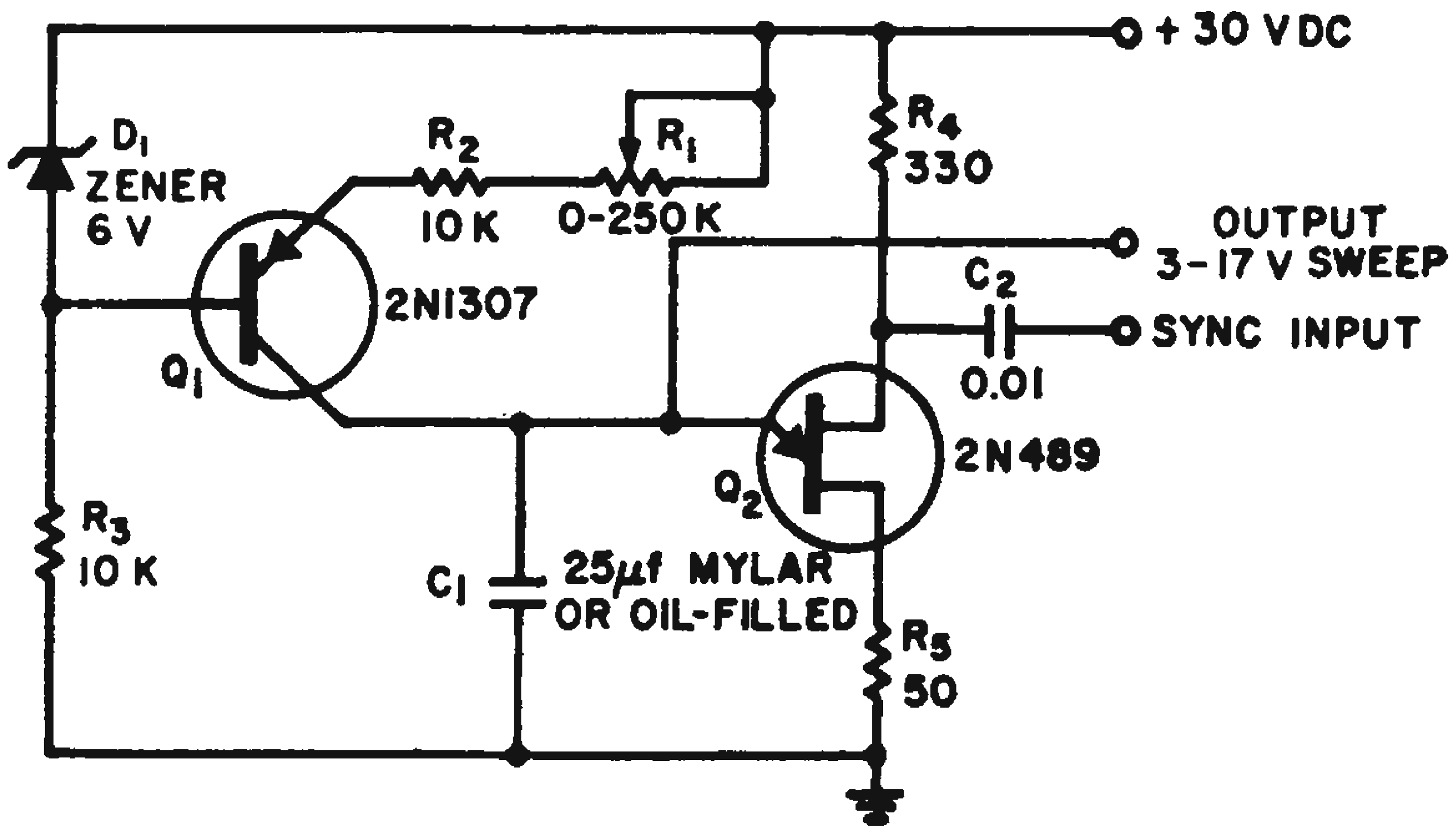

Low-speed sweep for cardiac monitor uses constant-current characteristic of emitter follower.

John L. Aker, associate engineer, The Boeing Co., Wichita, Kan.

Series Oscillators Produce Modulated Output

Two conventional tuned-collector Colpitts transistor oscillators can be combined to supply an amplitude modulated output. Regenerative feedback is applied to the emitter from the tank circuit. The combination of R_1, R_2 and R_3 forms the base bias path for transistor Q_2 with resistor R_4. Percentage of modulation is adjusted by resistor R_3.

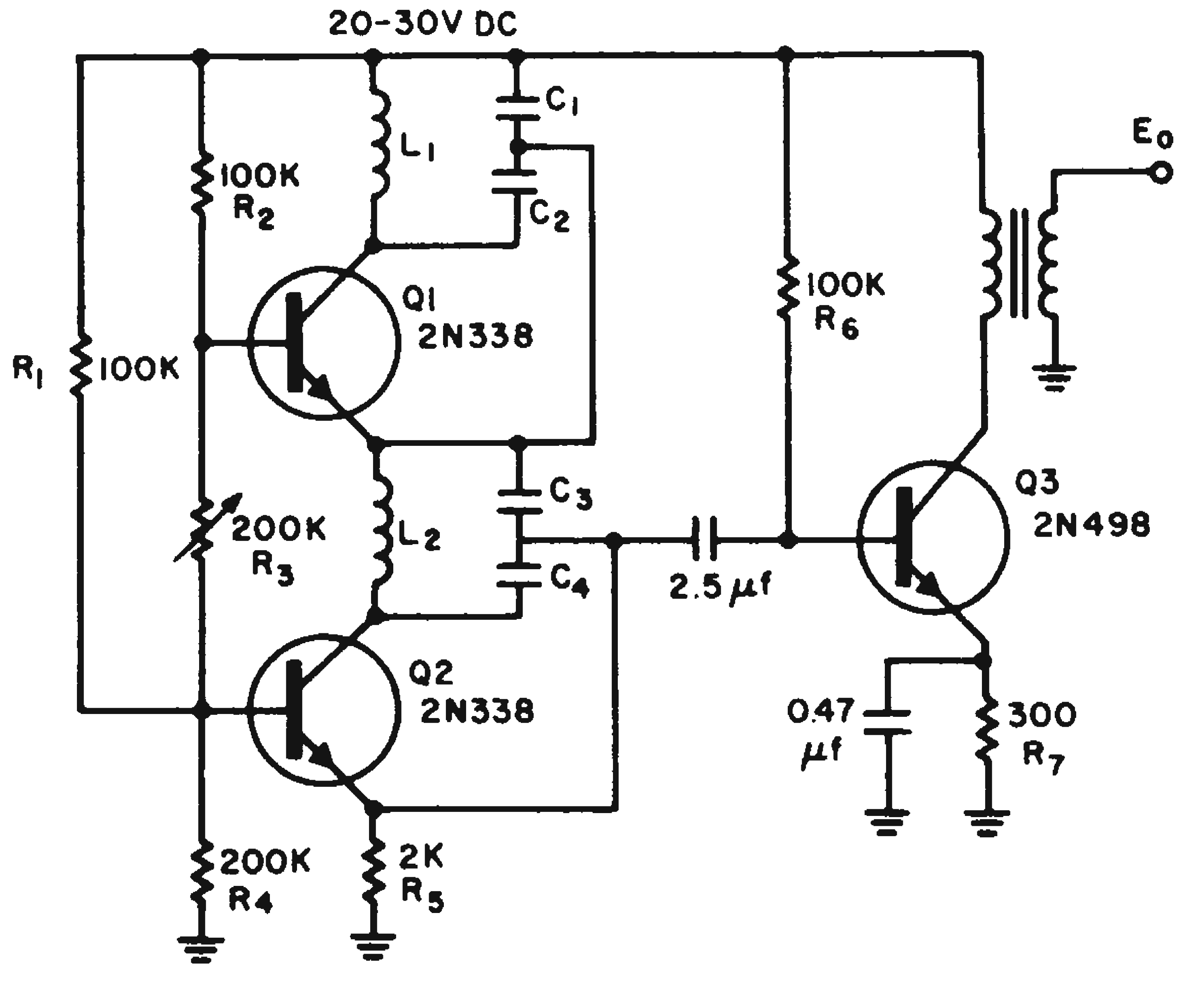

Series operation of two transistor oscillators give amplitude modulated output.

The circuit has been temperature-cycled over a range of 10 to +55 C and has proven to have an extremely stable amplitude output with very reliable starting characteristics. Output transistor Q_3 provides a higher signal level without loading the oscillator.

R. L. Beyer, project engineer, Naval Ordnance Test Station, China Lake, Calif.

Input Pulse Width Controls Simple Ramp Generator

A highly linear sweep, whose width is controlled by the duration of the initiating pulse, can be built using only two transistors. When D_1 is reverse biased by the input pulse, C charges through D_2, R, and the step resistor. The latter resistor determines pedestal height at the start of the ramp.

The Darlington-connected emitter follower Q_1 and Q_2, is bootstrapped through a blocking capacitor. This restricts the current through D_2 to a constant value. The slope is controlled by R and C. Linearities better than 0.25 per cent are readily obtained.

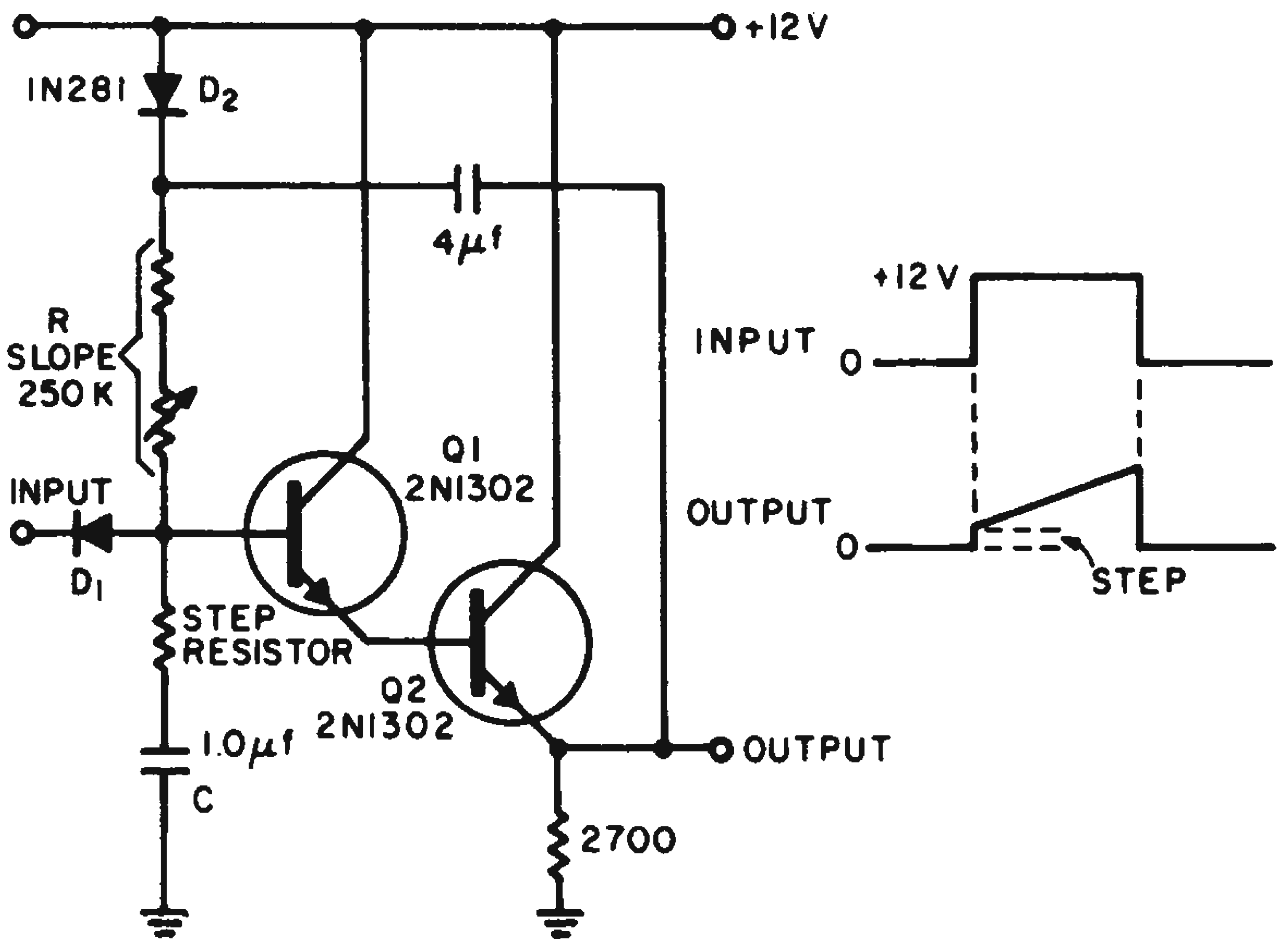

Height of step at beginning of ramp is determined by value of step resistor.

John Porter, president, Portronics, Inc., Tarzana, Calif.

Four-Layer Diode Makes Simple Astable Multivibrator

An astable multivibrator with a wide range of pulse repetition rates and any degree of dissymmetry can be realized by using a four-layer diode with an RC charging network. The advantages of this circuit are small size, use of relatively few components, low power dissipation, ability to work with a wide range of supply voltages, and speed of operation.

The minimum pulse width obtainable is limited by the maximum rate of capacitor discharge. The maximum interval between pulses is limited by the capacitor leakage current. The RC charging chain of (R_1+R_2) C_1 determines the repetition rate. When the voltage between R_1 and R_2 becomes greater than the breakdown voltage of D_1 the four-layer diode fires.

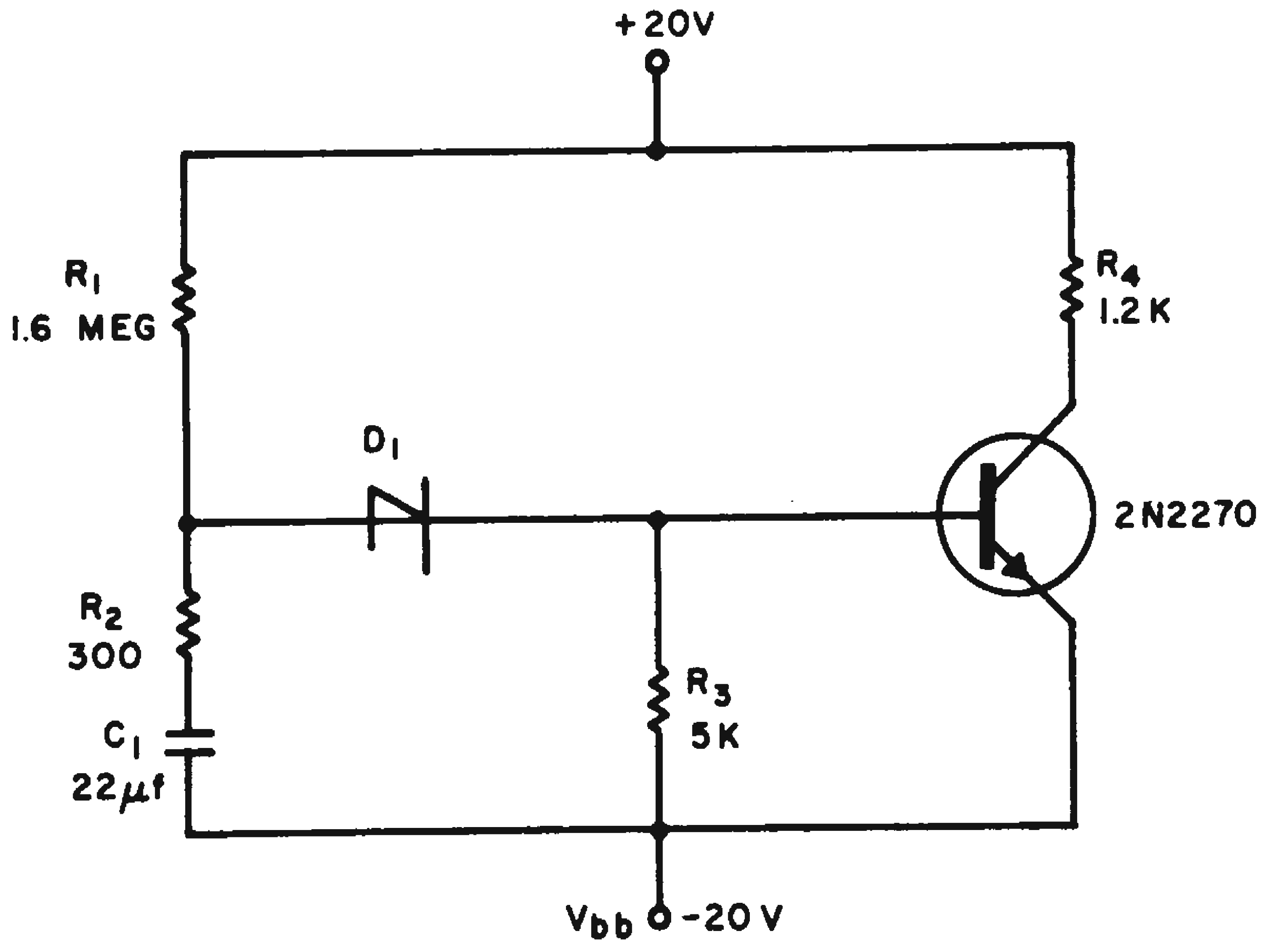

Using the values shown, four-layer diode multivibrator gave pulse width of approximately 18 msec with an interval of 50 seconds between pulses. The rise and fall times for the entire 40-volt swing are less than 20 nsec.

The pulse width is then determined by the discharge of $R_2 C_1$. As long as the current discharge from the capacitor plus the power supply current through R_1 is greater than the diode maintaining current, the transistor will be turned on. When it falls below this value the diode turns off and the cycle repeats itself.

The design equations are:

Voltage across the diode before firing

$$V_d = V_{bb}\left(1 - \frac{R_1}{R_1 + R_2} e^{-\frac{t}{(R_1 + R_2) C_1}}\right)$$

A useful approximation results if $R_1 >> R_2$

$$V_d = V_{bb} (1 - e^{-\frac{t}{(R_1 + R_2) C_1}})$$

$$I_d = \frac{V_{bb} - V_d - V_{be}}{R_1} + \frac{V_c}{R_2} e^{-\frac{t}{(R_2 + R_d + R_{be})C_1}}$$

For astable operation, the diode current

$$I_d = \frac{V_{bb} - V_d - V_{be}}{R_1}$$

must be less than the maintaining current of the diode.

James Chesebro, design engineer, Collins Radio Co., Newport Beach, Calif.

Blocking Oscillator Operates Without Transformer

A circuit using eight components can provide the function of a blocking oscillator for less than the cost of a pulse transformer alone. It furnishes a narrow, fast rise pulse from a low impedance output. Variation of the value of C_1 causes the width of the pulse to change.

The input is triggered by 6-volt negative pulses with a fall time of 40 nsec or less. Normally Q_1 is biased off by R_1. Since all three elements of Q_2 are normally at 6 v, Q_2 is also off.

A 6-v negative trigger pulse is coupled through C_1 to turn on Q_1, driving it deep into saturation. C_1 charges rapidly through the relatively low-impedance path presented by the emitter-to-base resistance of Q_1. R_2 furnishes a load to the collector of Q_1.

The 6 volts across R_3 causes 6 ma to flow in the base of Q_2. After a short delay Q_2 turns on. The value of C_1 is chosen so that Q_1 is on the verge of coming out of saturation just as Q_2 turns on. Q_2 attempts to pull the output potential to 6 volts but R_4 prevents this until Q_1 has turned off again. R_1 is sufficiently small to aid Q_1 in turning off rapidly. CR_1 provides a low-impedance charging path for C_1 when a positive pulse is applied.

The circuit operates from dc to frequencies in excess of 10 Mc depending on load.

It was empirically determined that the pulse width varies proportionally with the value of C_1, according to the relation $W = 44 + C_1/8$ nsec, where C_1 is in picofarads. This expression is accurate to about ±5 per cent in the range of 120 to 470 pf.

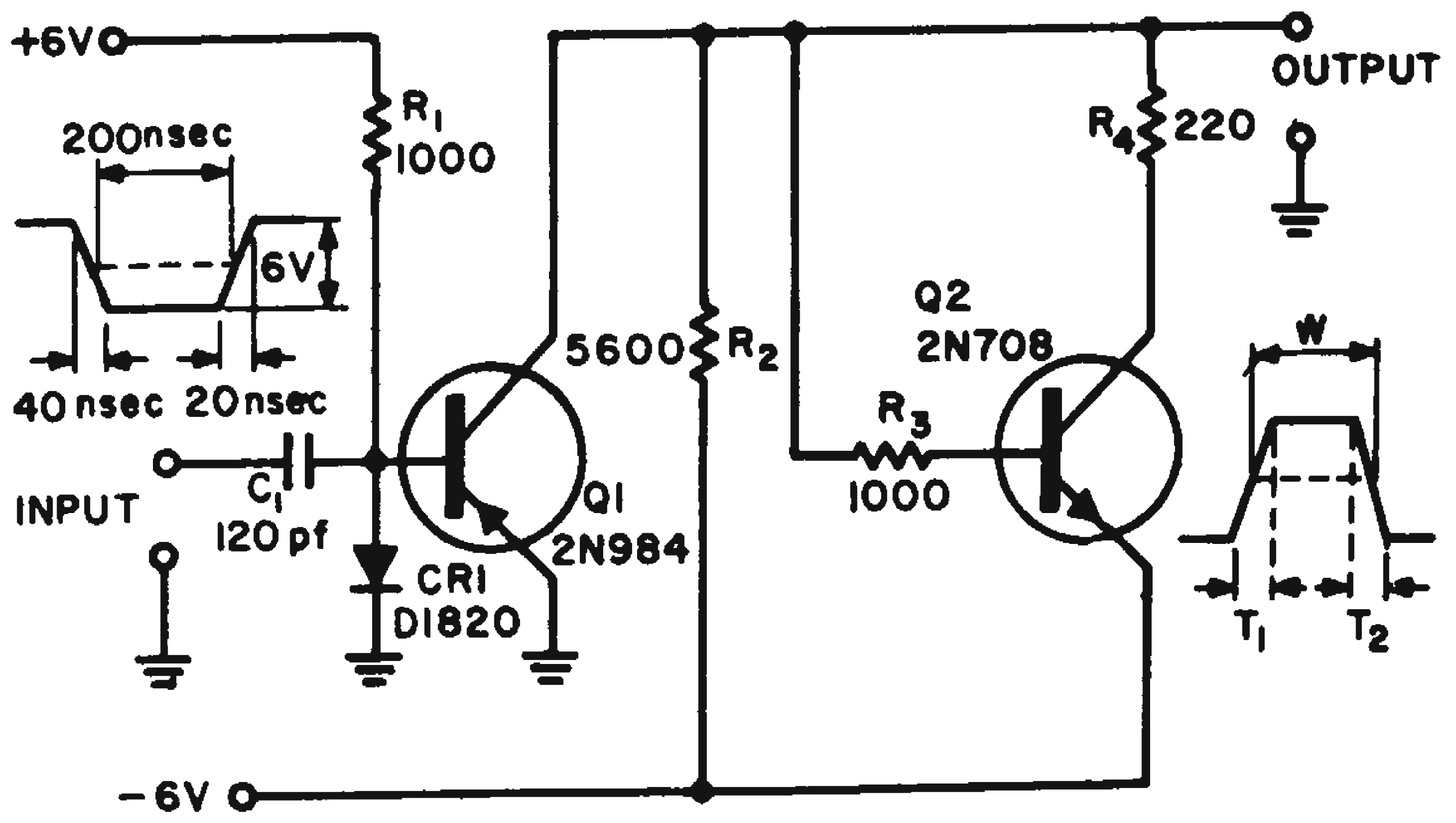

	NO LOAD	220pf LOAD
W	56 nsec	70 nsec
T_1	12 nsec	25 nsec
T_2	15 nsec	99 nsec

Characteristics of transformerless blocking oscillator tested with no load (a) and with a 220 picofarad load (b).

Carl A. Karrfalt, engineer, Sanders Associates, Inc., Nashua, N. H.

Unijunction Generator Has Variable Square-Wave Output

The usual waveforms available from a simple unijunction oscillator often need processing before they are used in subsequent functions. The $base_1$ and $base_2$ outputs, for example, can be loaded quite heavily without affecting basic timing stability. However, considerable stretching may be required to accommodate certain jobs. This simple circuit provides a variable duty-cycle square wave obtained by lightly loading the emitter timing circuit. This light loading preserves excellent frequency stability. If only one particular duty cycle is desired the potentiometer can be replaced by a two-resistor divider. Faster fall and rise times can be attained by including emitter bypass *C*. Its value will be between 0.01 and 50 μf, depending upon the desired output pulse shape.

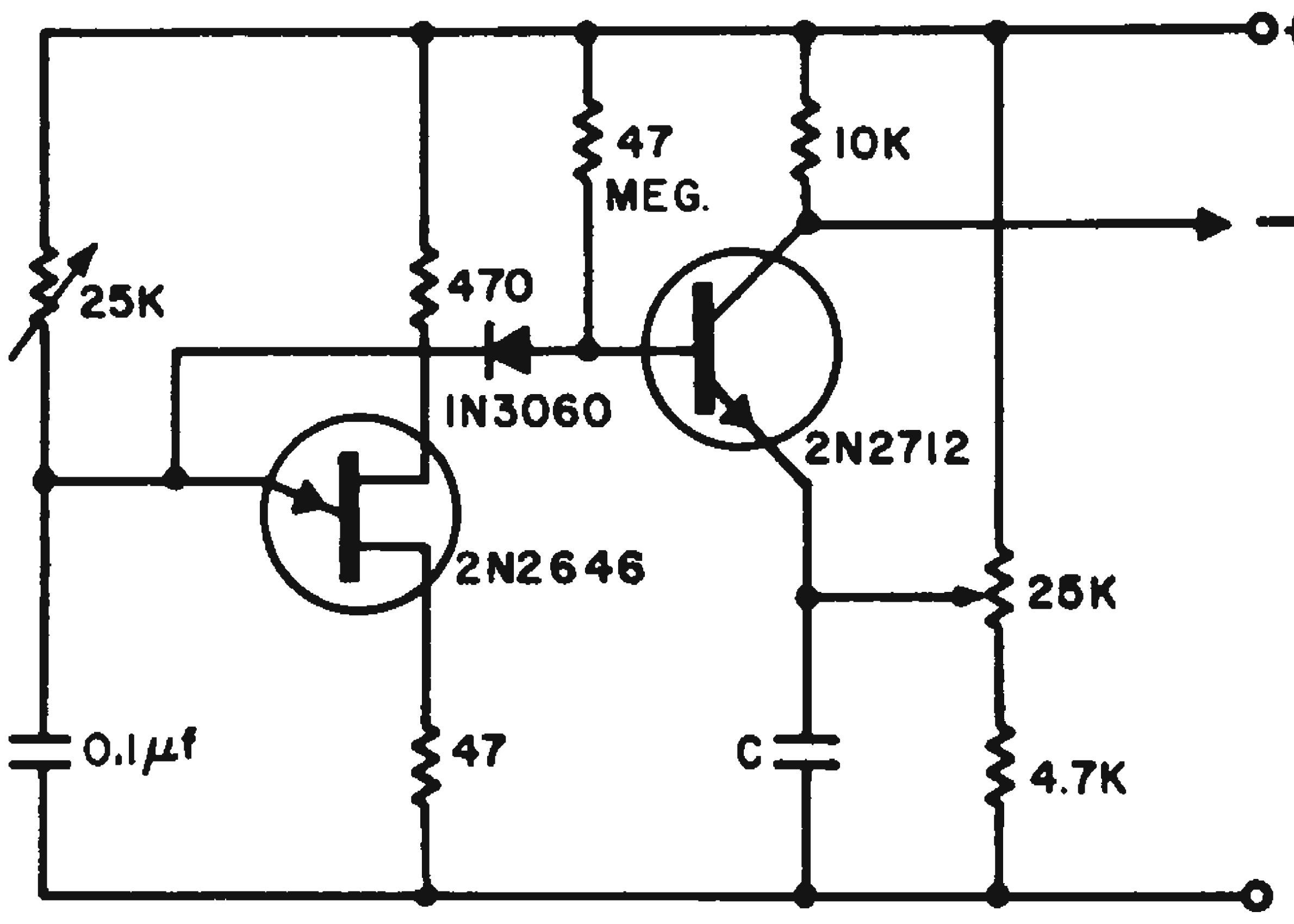

Two potentiometers control frequency and duty cycle of unijunction oscillator.

John H. Phelps, manager, application engineering, General Electric Co. Syracuse, N. Y.

Varistor Stabilizes Phase-Shift Oscillator

One of the disadvantages of using an *RC* phase-shift oscillator is the problem of maintaining class-A operation. Decrease in oscillator output reduces the lamp brilliance, lowers the network attenuation, and thus normalizes the output. Transistor Q_1 is the oscillator, Q_2 is an emitter follower and Q_3 is the feedback amplifier. Resistor R_1, a feedback control, is used to adjust the oscillator for minimum distortion consistant with adequate output.

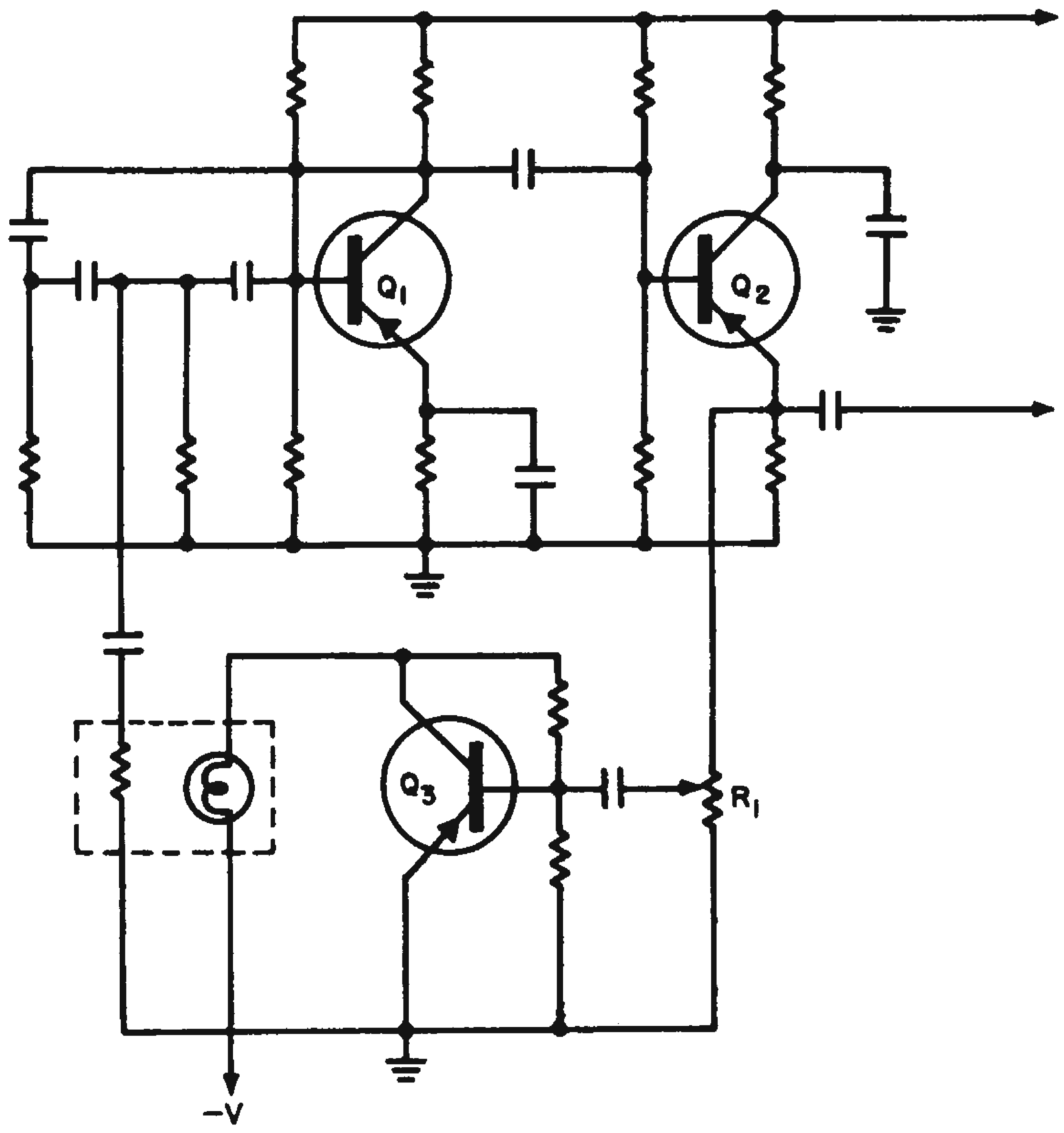

Light variable resistance gives distortion-free operation of phase-shift oscillator.

William F. Doherty, electronic engineer, Norman Associates, Sacramento, Calif.

Three-Mode Multivibrator Uses Single Control Wire

Three-mode control of a multivibrator is possible with a single control lead. The three modes are: single-shot operation with minimum on time; single-shot operation with on time determined by C_1 and R_1; and bistable operation with on time determined by manual reset.

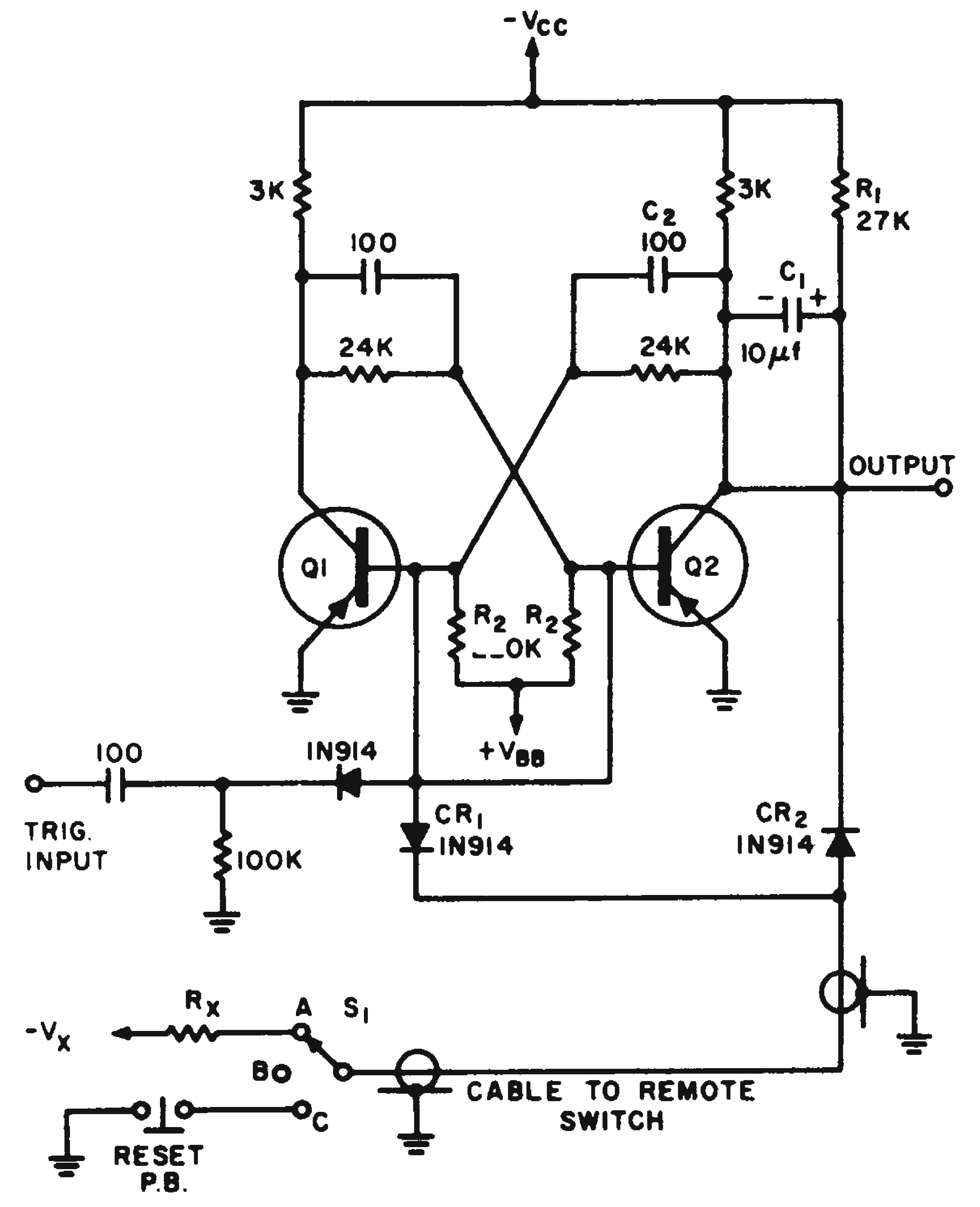

Three modes of operation are possible from a multivibrator using a single remote control wire.

When switch S_1 is in position *A*, the multivibrator is held in the off state by resistor R_x. When an input trigger is applied, speed-up capacitor C_2 turns Q_1 off, switching the multivibrator to the on state. The on time is determined by R_x, R_2 and C_2. When S_1 is in position *B*, C_1 and R_1 are introduced as timing components. When S_1 is in position *C*, the anode of CR_2 is grounded, removing the effect of C_1 and R_1 on the base of Q_1. The circuit now functions as a bistable multivibrator with a reset pushbutton.

D. E. Campbell, principal electronics technician, University of California, Livermore, Calif.

Multivibrator Generator Gives One Pulse Per Hour Output

In using multivibrators to produce low-frequency square waves and timing pulses, the designer is confronted with the problem of effectively increasing the *RC* time constant of an astable circuit while maintaining sufficient transistor gain and output rise time.

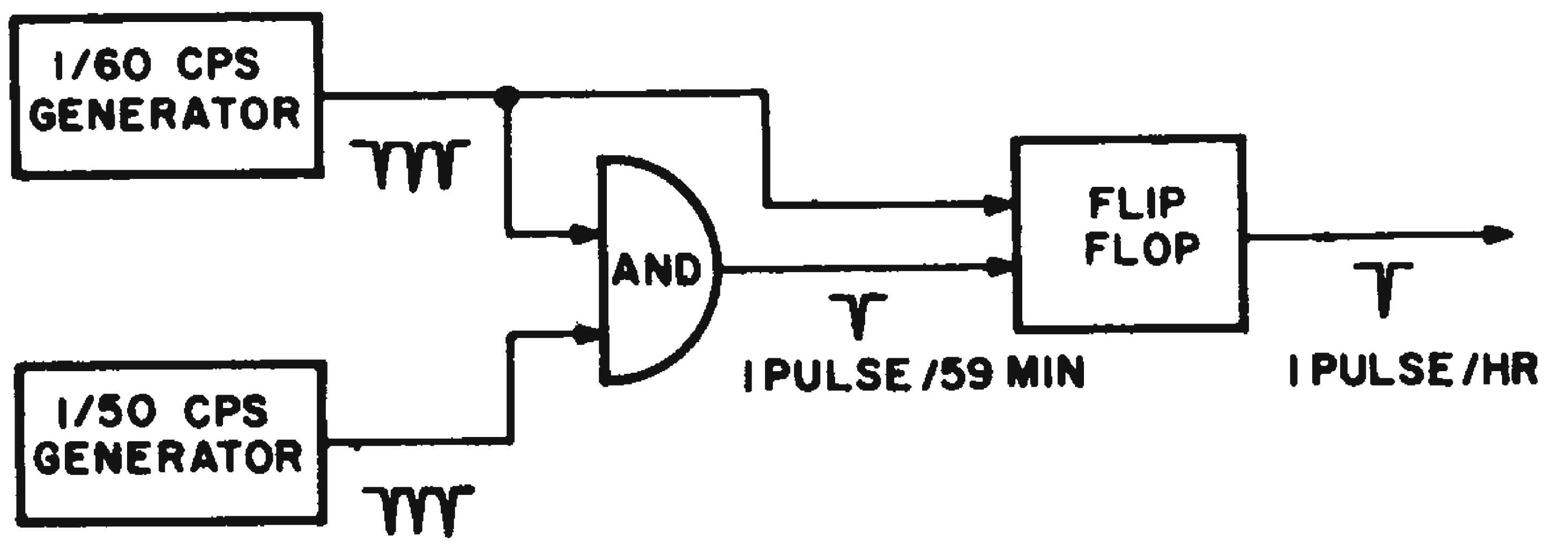

Coincidence of pulses from slow-speed multivibrators provides one pulse per hour output.

Fig. 1 shows a 1-pulse-per-hour generator that employs a technique that will reliably produce very low frequency pulses with conventional circuitry. The output of a 1/60-cps and a 1/59-cps generator serve as the input to an AND gate. Both the 1/60-cps and 1/59-cps generators consist of a multivibrator, an *RC* differentiating circuit and a diode. These produce negative pulses at a 1/60-cps and 1/59-cps rate.

The AND gate will produce an output only when the outputs of the two generators are in coincidence, once every 59 minutes. To generate a pulse once every hour it is necessary to have an additional 60-second delay. This may be accomplished by triggering a flip-flop with both the output of the AND circuit and the 1/60 cps generator.

The flip-flop can be used directly as a 1-cycle-per-hour generator or its output can be differentiated to supply a 1-hour timing pulse.

When designing low-frequency circuits using this technique it should be noted that the accuracy of this circuit depends upon the frequency stability of the 1/60-cps and 1/59-cps generators. In addition, to insure reliable operation of the AND gate, the length of the generator output pulses must be sufficient to produce coincidence every 59 minutes.

Should an application arise, a divide-by-12 circuit could be added to the one-cycle-per-hour circuit to produce a one-cycle-per-day generator.

Robert B. McIntosh, Jr., electro-optical engineer, General Precision Inc., Aerospace Group, Little Falls, N. J.

Voltage Changes Transmitted As Shifts in Frequency

The difference of two signals, normalized to their sum, had to be accurately transmitted over very long cables. At first, voltage drops along the cables presented a great problem. However, this problem was soon solved by converting the information to frequency variations and transmitting frequencies rather than amplitudes.

Shown in the block diagram are the basic sections used in the circuit. As a unit they:

1. Convert a voltage to a frequency that is directly proportional to the voltage (digitizing).
2. Divide two voltages dynamically and with a fast response, digitizing the output.

The transfer ratio depends solely on the time constants chosen. The voltage may be either constant or varying, as long as the time constant is short compared to the period of the variation.

If V_2 is fixed and V_1 is integrated until a level of V_2 is reached, (at which the integrator is reset to zero), then

$$V = \frac{V_1 t}{RC}$$

When: $V = V_2, \quad \tau = \frac{V_2}{V_1} RC$

then: $f = \frac{1}{\tau} = \frac{V_1}{V_2 RC}$

or: $f = KV_1 \qquad \text{where } K = \frac{1}{V_2 RC} \qquad (1)$

If V_2 is also varied:

$f = k \frac{V_1}{V_2} \qquad \text{where } k = \frac{1}{RC} \qquad (2)$

It may be necessary to restrict the frequency range, that is, to keep the frequency from going to zero when $V_1 = 0$. This can be done by adding V_1 to V_2 and, instead of integrating V_1, we integrate $V_1 + V_2$. Reset still occurs at a voltage level of V_2.

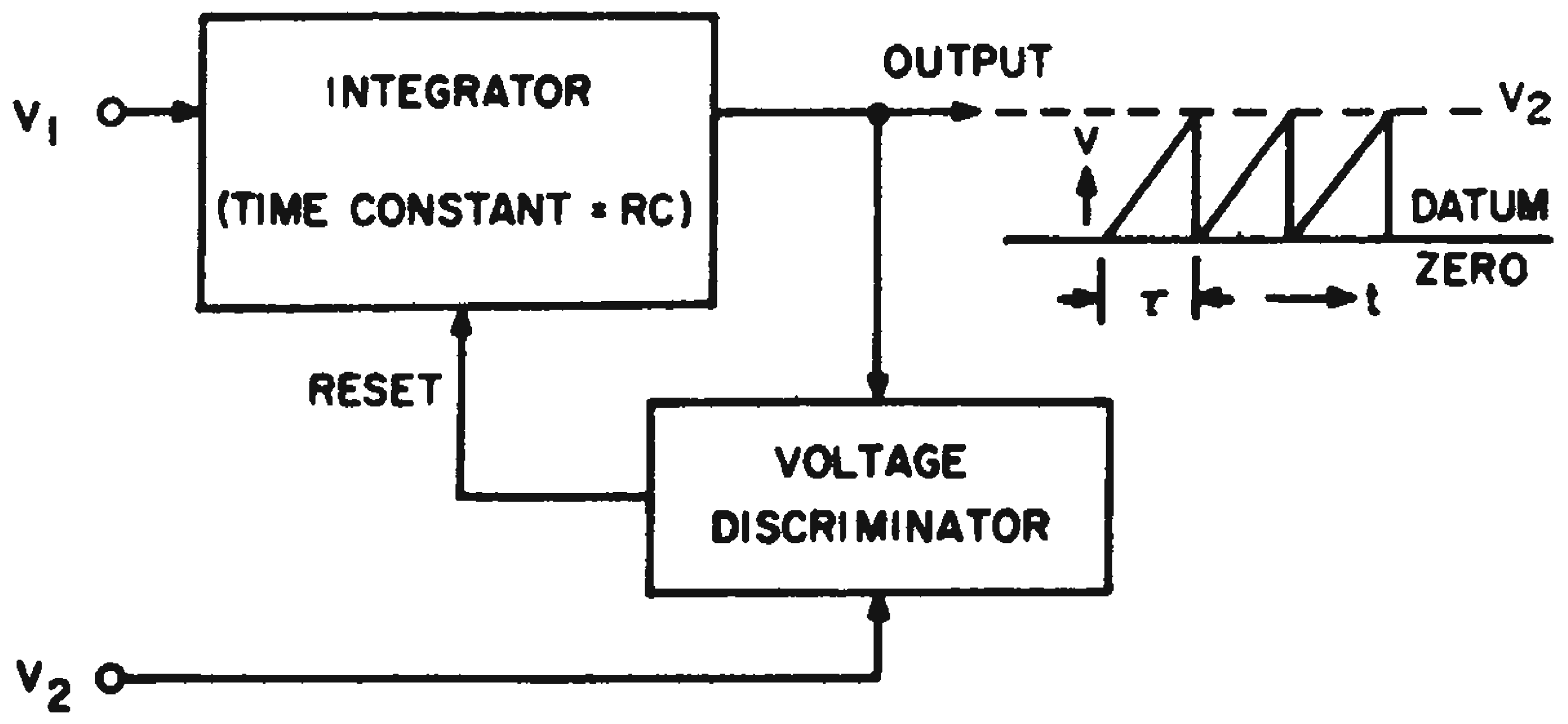

Voltage drops in cables did not have to be considered when voltage differences were converted to proportional frequencies.

For the first case, with V_2 fixed:

$$f = \frac{V_1 + V_2}{V_2 RC} = KV_1 + f_0$$

where $K = \frac{1}{V_2 RC}$

and $f_o = \frac{1}{RC}$

For the second case, with V_2 varying:

$$f = k \frac{V_1}{V_2} + f_o$$

$$= f_o + f_o \frac{V_1}{V_2}$$

$$\pm f_o \left(1 + \frac{V_1}{V_2}\right)$$

where $k = \frac{1}{RC}$

$f_o = \frac{1}{RC}$

There are many variations possible with this basic block diagram. In our application the circuit was used to indicate the proton beam location in the Brookhaven alternating gradient synchrotron.

Martin Plotkin, Electrical Engineer, Brookhaven National Lab., Upton, L. I., N. Y.

Modified Modulator Yields Wide-Band FM Transmitter

In a simple transmitter circuit, a Pacific Semiconductor Varicap was used in a basic modulating configuration, Fig. 1. Unfortunately, it was very difficult to obtain a uniform modulation index over the entire range.

The original circuit injected the audio modulation through a capacitor into the bias circuit of the Varicap. This required a very large capacitor to get down to low modulation frequencies. By making circuit changes, Fig. 2, the large input capacitor was eliminated to yield uniform modulation from dc to over 10 kc.

In modifying the circuit, the ground return of the Varicap is lifted off ground and a resistor is added between this point and ground. The resistor can be selected to match the modulation source impedance. An rf bypass completes the Varicap path to ground.

The addition of the resistor in the Varicap ground return apparently does not upset the bias on the Varicap, assuming resistor *R* is a high value. Measurements showed that only 0.5 v is developed across it even with an audio matching resistor of 2 K.

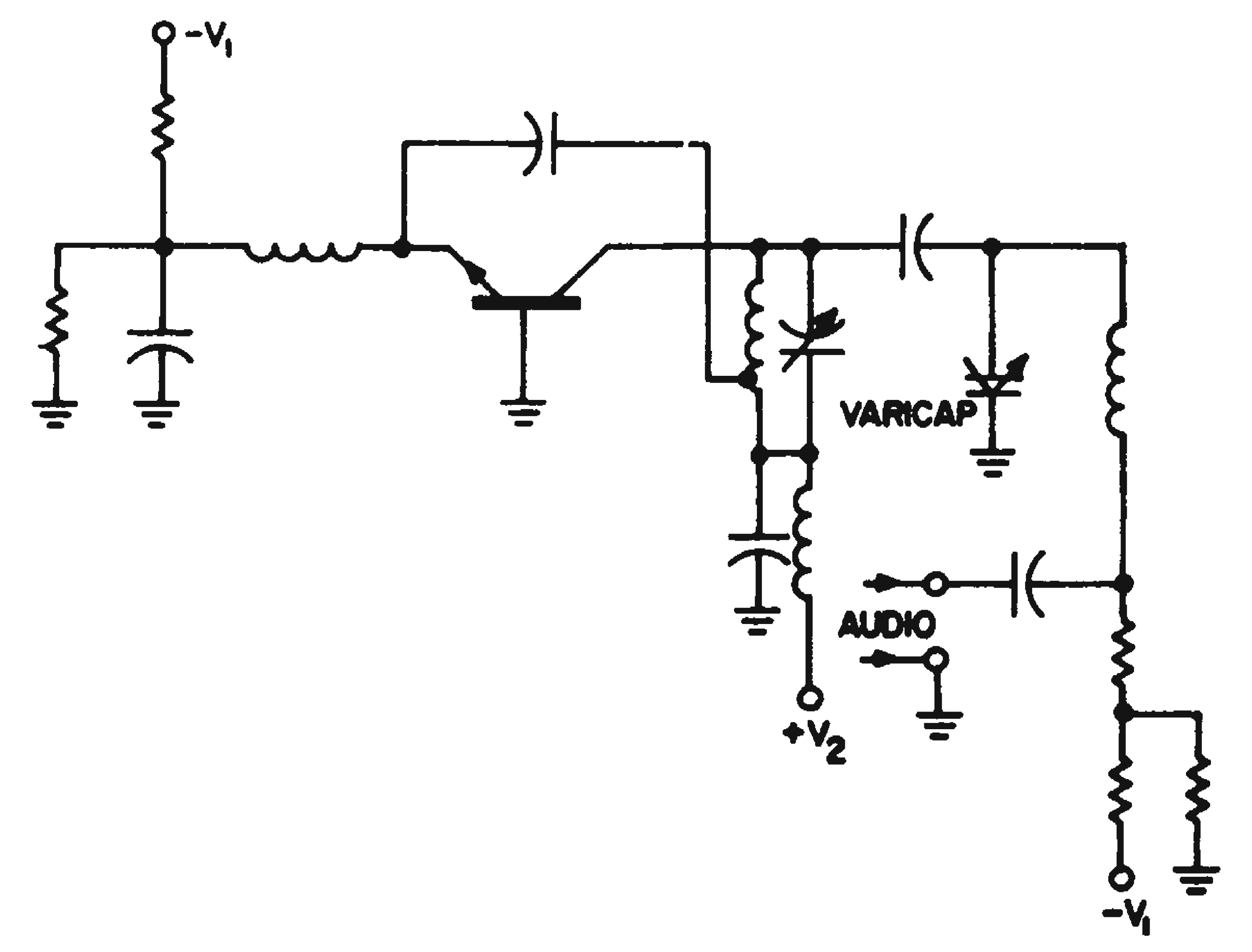

Fig. 1. Original transmitter circuit injected audio modulation through a capacitor into Varicap modulating circuit; modulation index was not uniform.

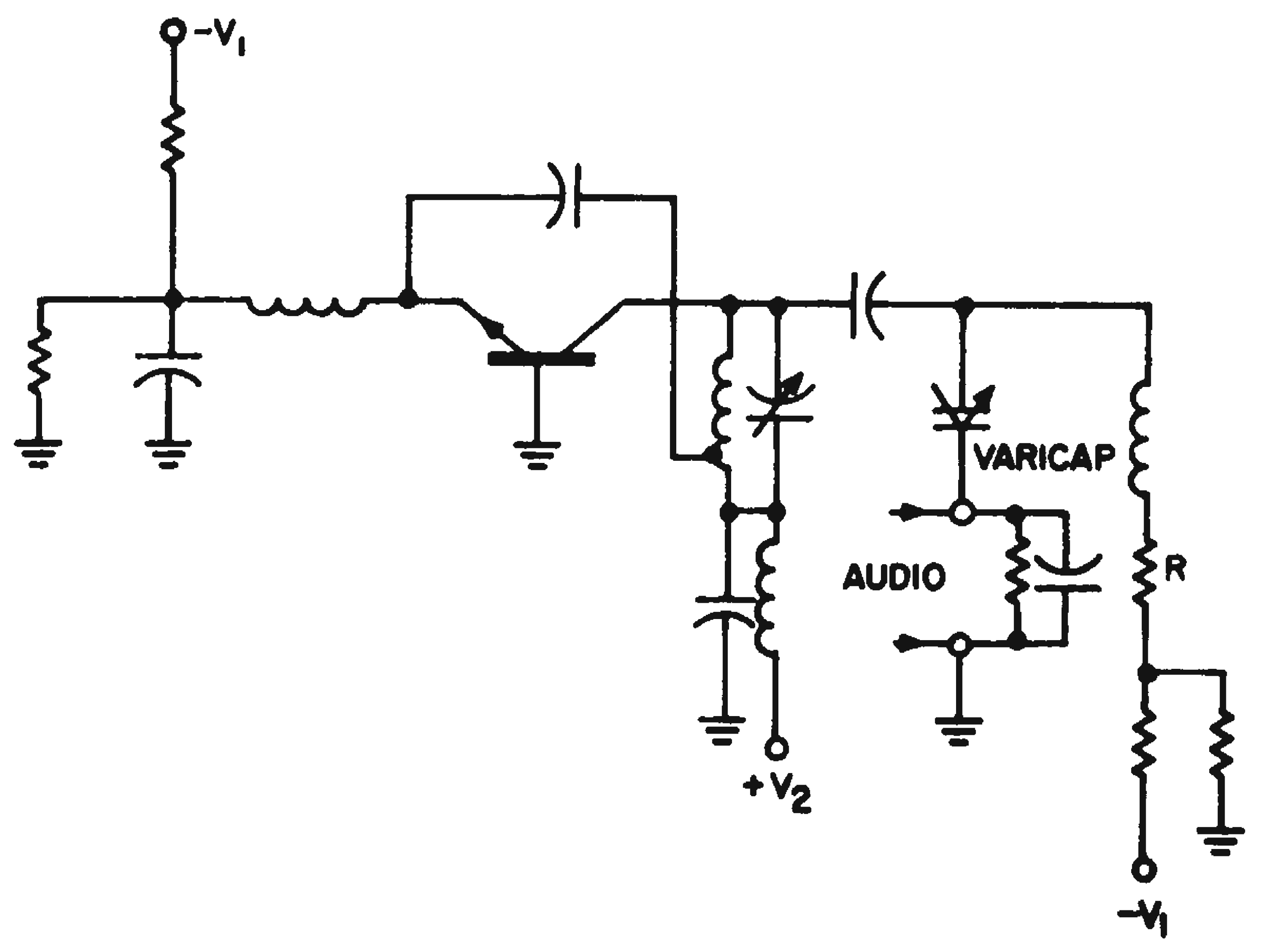

Fig. 2. Modified circuit eliminates input capacitor, allows uniform modulation from dc to over 10 kc.

Philip R. Houghton, Technician, Motorola, Inc., Scottsdale, Ariz.

Sine-Wave Modulator Uses Complementary Transistor Pair

When a sine-wave modulator is required, one satisfactory technique is to use a chopper modulator followed by a band-pass filter. But, where only moderate linearity is required, and small size and low phase shift is necessary, a complementary modulator can perform quite adequately.

A complementary modulator is shown in the figure. Used with a demodulator that supplies the dc signal, the circuit can replace bulky electromechanical devices in providing quadrature rejection for multi-input servo amplifiers.

The circuit makes use of the ac current gain, h_{fe}, versus emitter current variation of a complementary pair of silicon transistors. The linear modulation characteristic is constructed from the individual h_{fe} vs I_e plots of the transistors. A common bias point, selected midway between the points of greatest average slope, determines the composite characteristic of greatest gain. This characteristic is proportional to the over-all transfer characteristic.

The transistors are connected with push-pull base excitation current and parallel-cancelling ac collector current. The dc input terminal is at the virtual ground point on the dc base bias resistor network.

With 0 v dc input, equal ac currents flow in the transistor collector circuits and cancel at the output. With a positive dc input, the npn transistor is biased harder.

Thus, because of its larger h_{fe}, it provides the greater contribution of ac current to the load. The pnp transistor, with reduced dc base current, contributes less ac load current. With the instantaneous base excitation polarities as shown, the output voltage is zero-phase ac. With a negative dc input, the pnp transistor provides the greater gain and the output is π-phase.

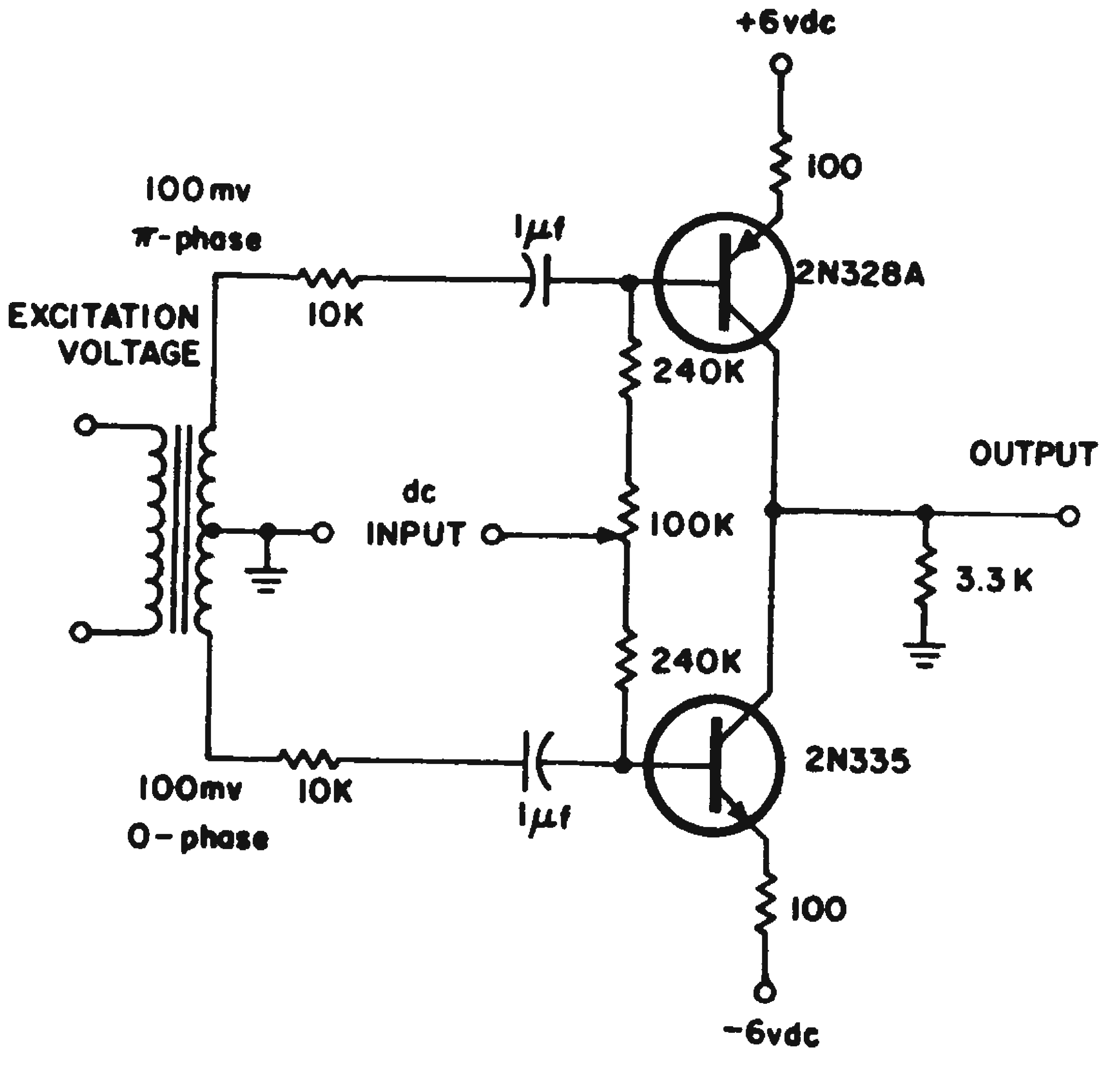

(a) Sine-wave modulator uses complementary transistors to yield moderate linearity, small size and low phase shift.

For the circuit shown, a 4-v dc input into the 200-K input impedance provides 0.4 v rms output into the 3.3-K load. By select-

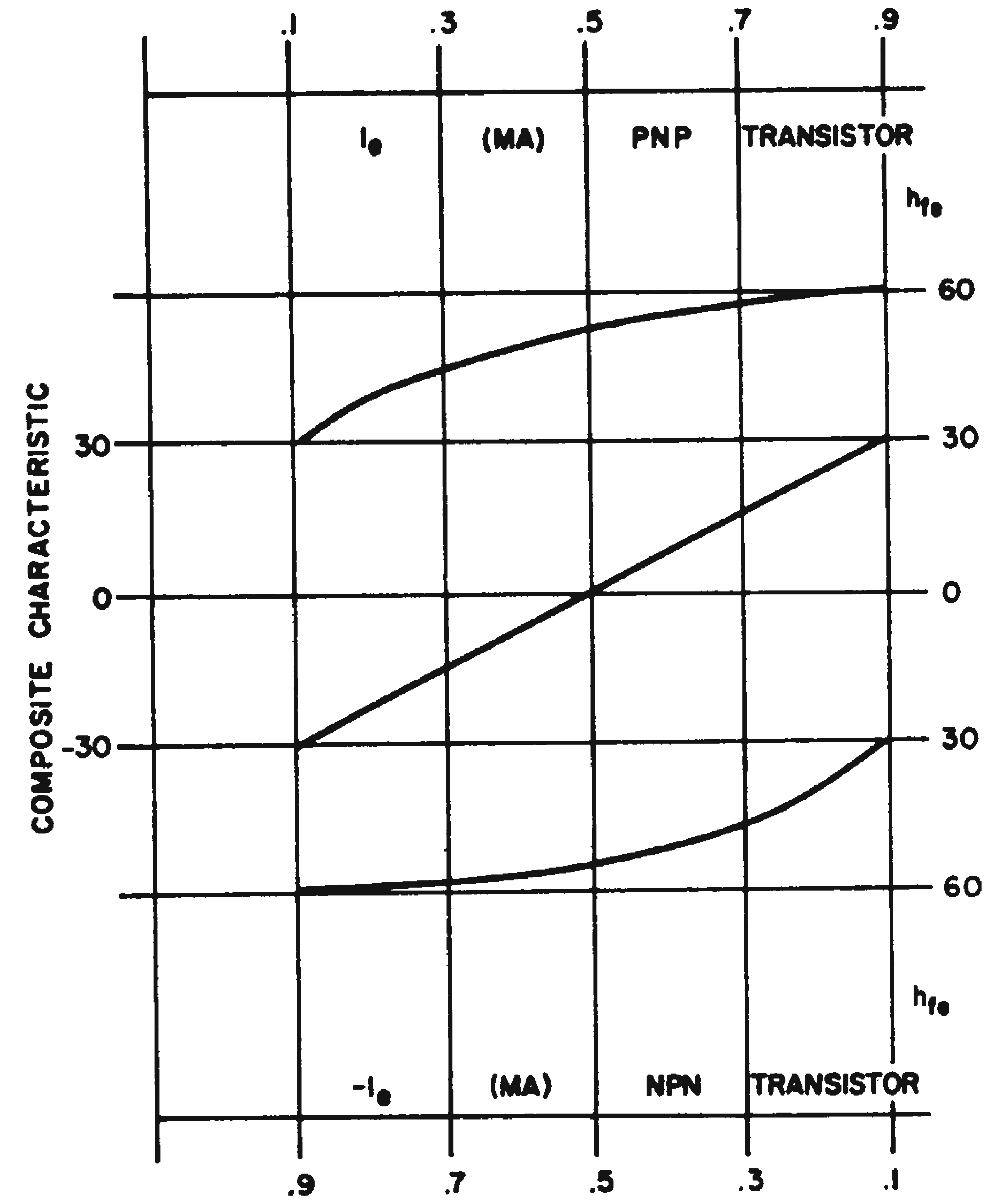

(b) Linear modulation characteristic is constructed from h_{fe} vs I_e plots of the transistors.

ing transistors, nulls of 1 mv can be obtained.

Lincoln S. Ferriss, Project Engineer, AC Spark Plug, Division of General Motors, Milwaukee, Wis.

Regenerative Switch Demodulates Sinusoid

By using what is basically a direct-coupled, regenerative switch, the carrier of a pulse-modulated sinusoid can be easily removed, leaving only the pulse modulation.

In fm-fm telemetry systems this function is usually performed by discriminator circuits. The output pulse can then be directly applied to digital circuitry.

The circuit shown is designed for a system where the digital transfer rate is at 2.5 kc, with a 20-kc carrier. Its hysteresis is less than 50 μsec. Bandpass filtering of the carrier was not necessary for the application in which the circuit was originally used.

Hysteresis is kept low by placing the filter in the feedback circuit. There, its time constant is effectively amplified by the gain of Q_1 and Q_2. This allows a smaller capacitor to be used at the input.

Positive feedback is adjusted by potentiometer *R5* to eliminate all ac from the output. The adjustment from this point, to the point where the switch is locked on, is quite broad.

Transistor Q_1 is held off by the drop across *CR3* caused by the leakage current. Its base is held at ground potential by the return through *R1* and *RT2* in parallel. The I_{CBO} of Q_1 flowing through this combination does not produce a drop sufficient to overcome the threshold voltage of Q_1 plus the drop across *CR3*.

Transistor Q_2 is similarly held off by *CR4* and *R3*. An incoming signal is half-wave rectified by *CR1* and clamped to ground by *CR2*. No filtering is used here since the discharge time constant of a filter of sufficient size would materially increase the circuit hysteresis.

The positive peaks of the rectified signal turn Q_1 on, supplying Q_2 with a base current path. The output of Q_2 is rectified by *CR5* and filtered by the combination of *C2*, *R4*, *R5* and the base return of Q_1. This signal constitutes positive feedback on the base of Q_1, switching it into saturation. This in turn causes Q_2 to saturate, producing a pure digital output.

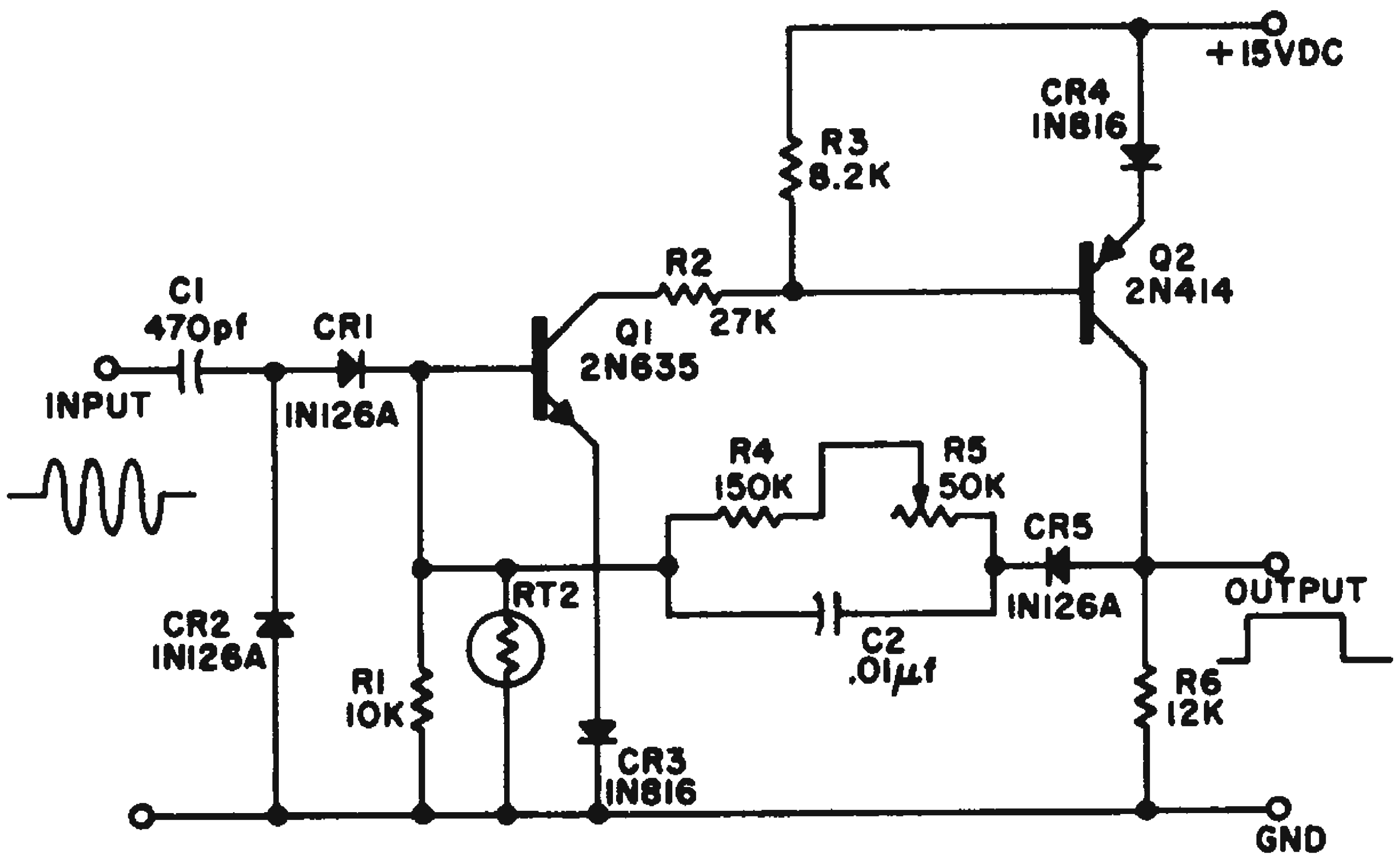

Simple demodulator removes carrier of pulse-modulated sinusoid, leaving only the modulating waveform.

The feedback is actuated so that the dc from the collector of Q_2 through *R4* and *R5* in series is, by itself, insufficient to keep Q_1 on. Therefore, when the input signal is removed Q_1 starts to turn off, causing a regenerative action in the reverse direction. Because the time constant associated with *C2* is short, no appreciable hysteresis results.

As the temperature increases the circuit becomes much more sensitive. This occurs because as temperature goes up (a) the threshold potential of Q_1 and forward drop of *CR3* decrease approximately 0.2 mv/C and (b) I_{CBO} of Q_1 increases causing a greater drop across *R1* and thermistor *RT2* in parallel.

However, the resistance of *RT2* decreases with increasing temperature, reducing the positive feedback. The circuit operated satisfactorily from 0 C to 40 C.

William C. Silbert, Design Engineer, The Martin Co., Baltimore, Md.

Dual-Polarity Signal Drive Uses Cascode Emitter Follower

To provide a low-output impedance drive circuit for signals of either polarity, we connected complementary transistors, as shown in Fig. 1. This circuit has a low current drain and can use inexpensive transistors. The pnp and npn transistors form a cascode emitter-follower configuration in which they cut each other off, drawing a negligible amount of quiescent current.

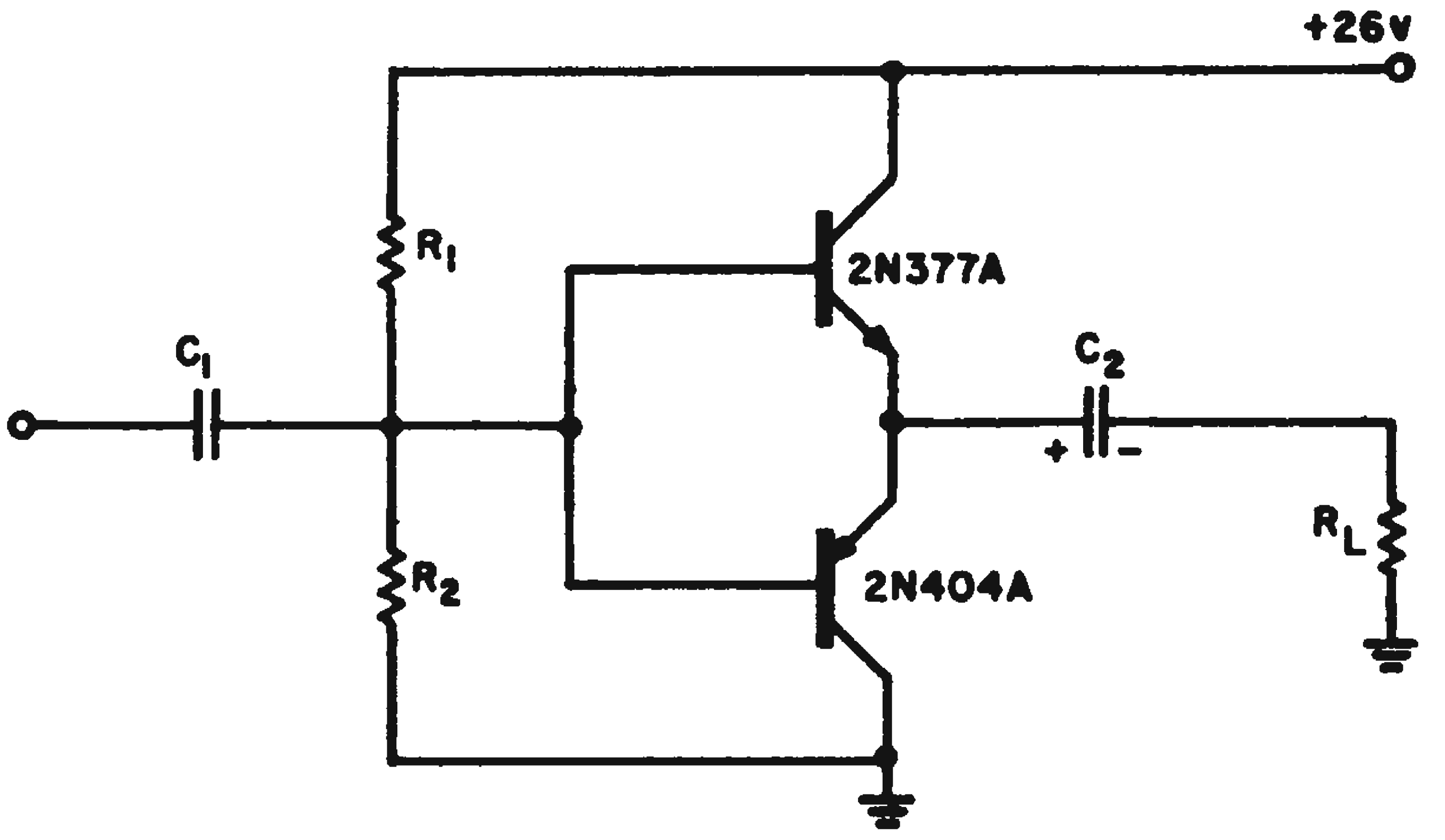

Fig. 1. Cascode emitter-follower circuit using inexpensive complementary transistors, forms low-impedance drive circuit for signals of either polarity.

A signal of either polarity, swinging around the bias determined by voltage dividers R_1 and R_2, causes the respective transistor to conduct. This shuts off the other transistor even more, and all the current flows to the load R_L through C_2.

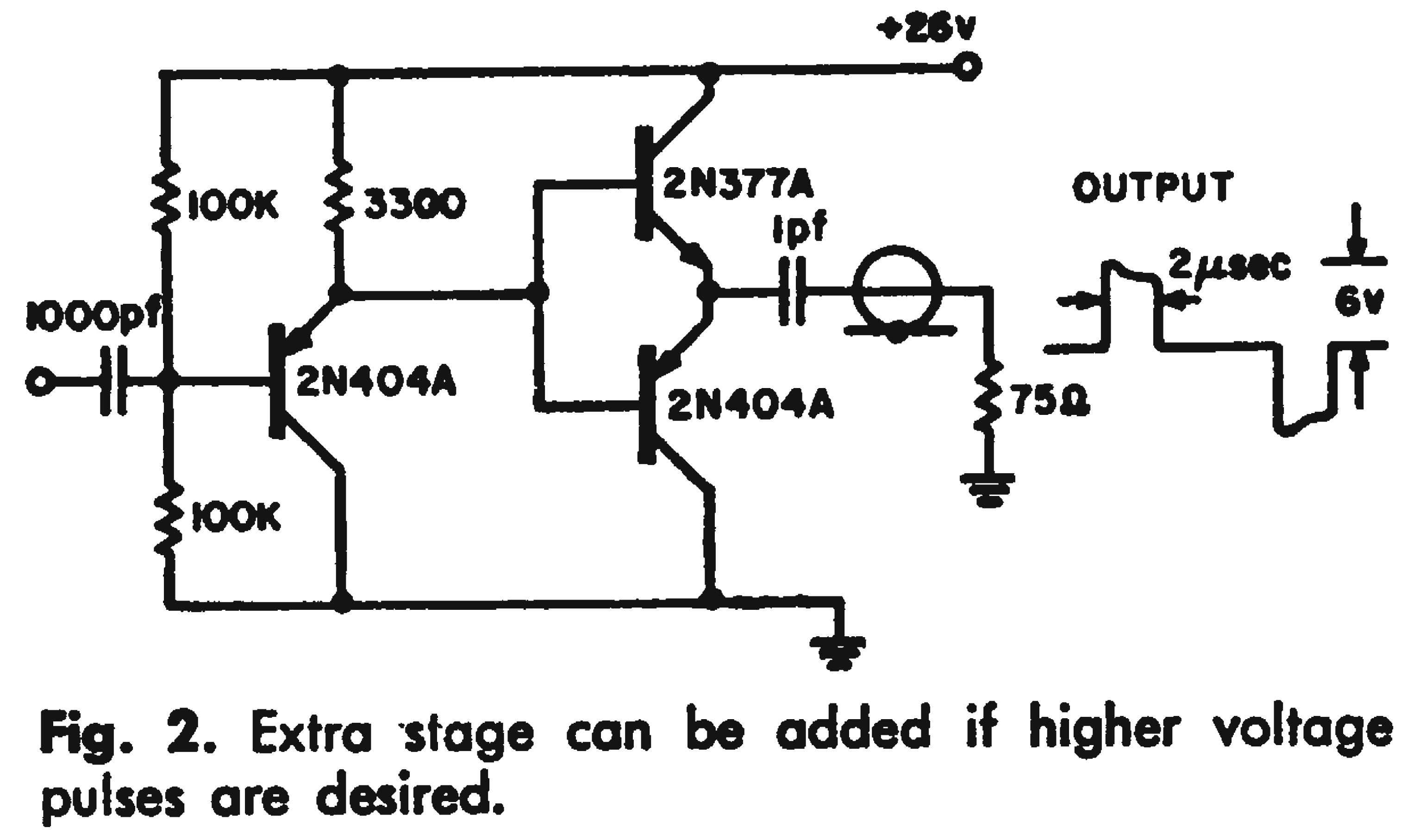

Fig. 2. Extra stage can be added if higher voltage pulses are desired.

In one application, a transistor phase-shift oscillator drove the circuit directly: $R_L = 200$ rms, $C_2 = 10.0$ μf, $R_1 = R_2 = 100$ K, $C_1 = 0.047$ μf. Output voltage was 10 v peak-to-peak at a frequency of 10 kc. In another application dealing with microsecond pulses of ±6 v amplitude, an extra stage was found desirable, Fig. 2.

Gunnar Richwell, staff engineer, Reflectone Electronics Inc., Stamford, Conn.

Low Impedance Line Driver Uses Standard Coils

Frequently, a terminated cable must be driven from a wideband if source. The optimum matched condition for this calls for an equal-Q, transitionally-coupled stage.

To achieve equal-Q loading under conditions of low load impedance, it is usually necessary to load the transformer secondary with shunt capacity as in Fig. 1. This reduces the value of the secondary inductance L_2. For values of L_2 less than M, a negative value of M is required in the Tee-transform of the circuit.

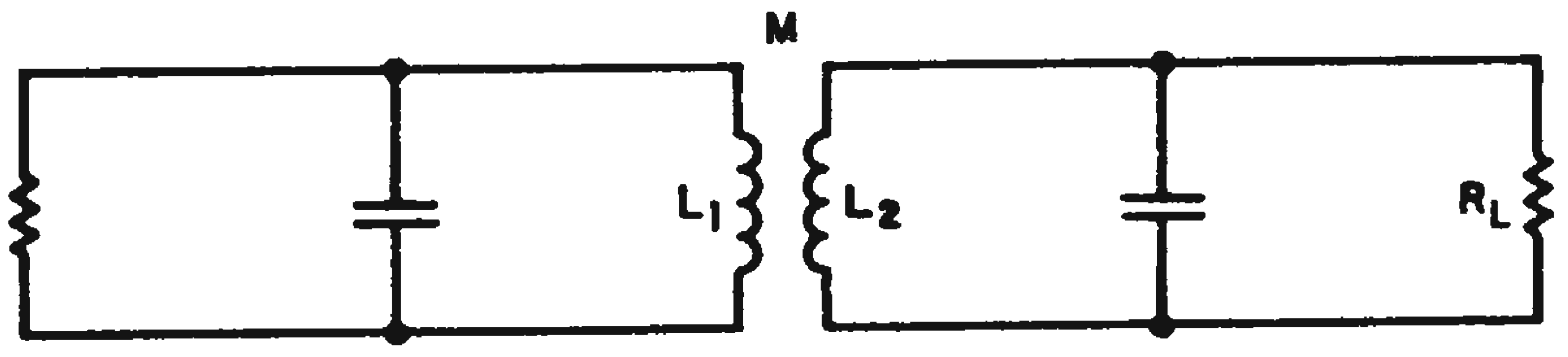

Fig. 1. If shunt capacity is required in a transformer secondary to achieve equal-Q loading with a low load impedance, negative values of *M* may be required in the Tee-transform of the circuit.

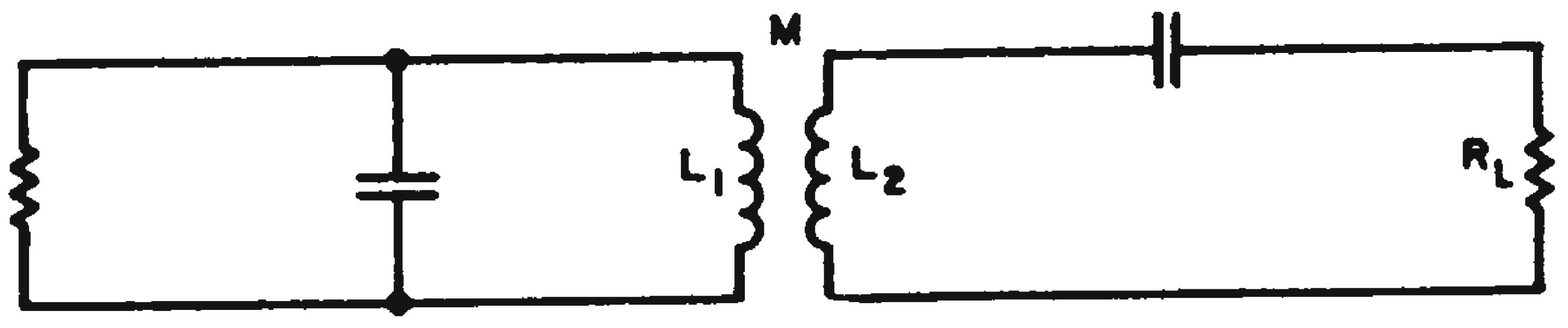

Fig. 2. With a series-tuned circuit in the secondary, L_2 will be much greater than *M*.

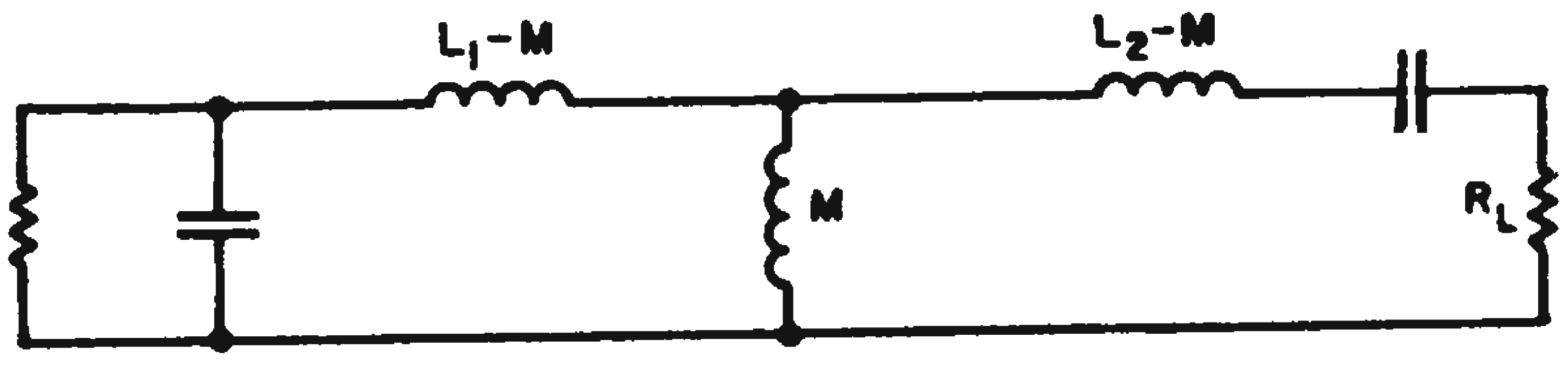

Fig. 3. The result of series tuning is that standard, not negative, coils are present in the Tee-transform circuit.

However, if a series-tuned circuit of the same Q is used in the secondary, Fig. 2, values of L_2 much larger than M are obtained. This allows standard coils to be used in the

Tee-transform of the transformer, as in Fig. 3.

Martin E. Doyle, design group supervisor, Raytheon Co., Airborne Operation, Sudbury, Mass.

Transistor Trigger Pulses Fire Tube & Blocking Oscillator

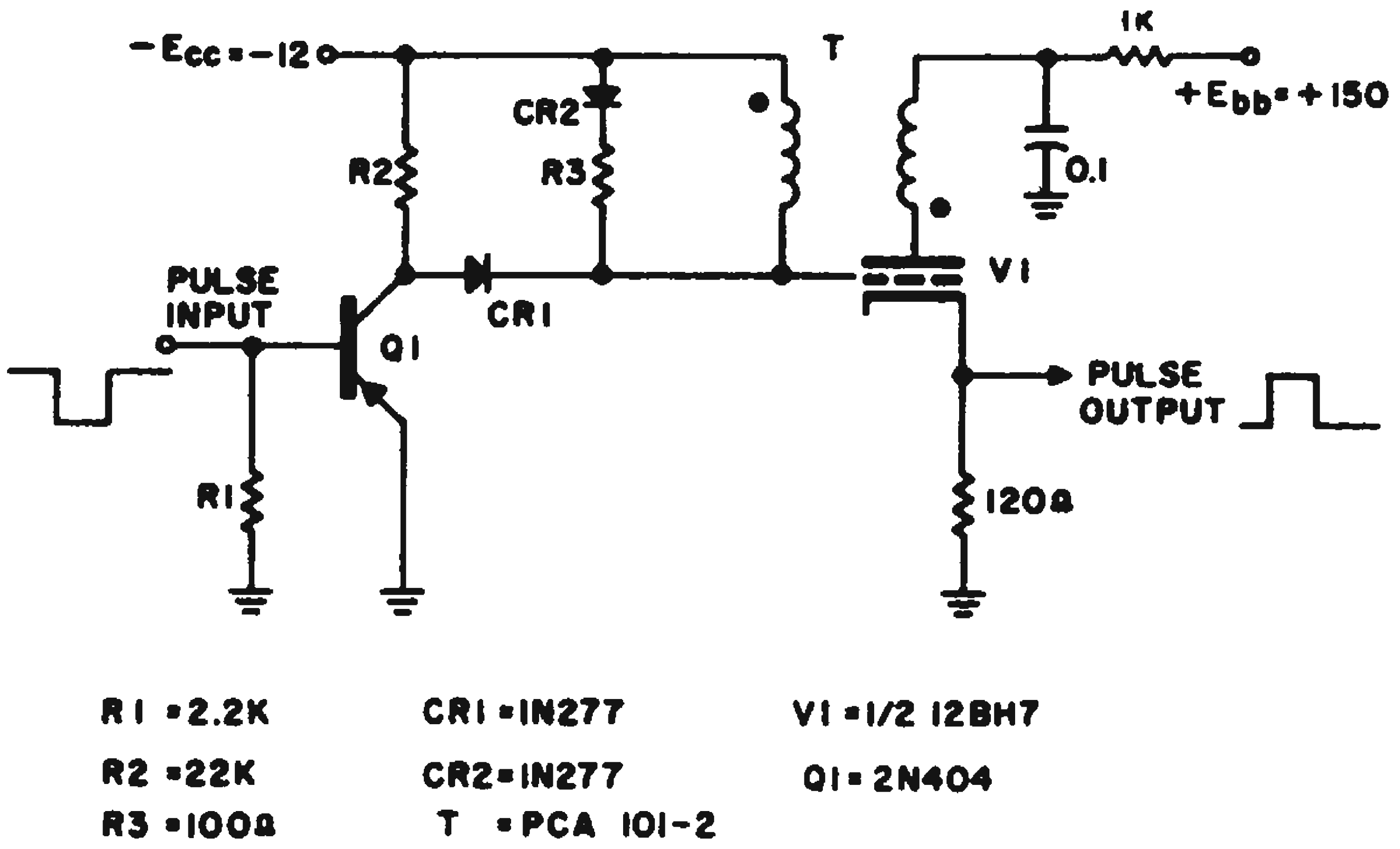

Pulses applied to the transistor stage trigger the vacuum-tube blocking oscillator.

Trigger sources of limited voltage swing and current capabilities are often regenerated by blocking oscillators. A vacuum-tube blocking oscillator can be triggered by a transistor as shown in the circuit diagram.

Transistor Q_1 is turned on by negative pulses applied to its base. Collector voltage rises from $-E_{cc}$ to ground potential. The grid of V_1 follows through CR_1. The tube is soon driven from cut-off into conduction and regeneration occurs through the action of T. As the grid potential of V_1 rises above ground, Q_1 is disconnected by CR_1. R_3 and CR_2 provide a load for the backswing of T. Resistor R_3 is selected so that the collector potential of Q_1 does not exceed its rating. Resistor R_2 provides a return for CR_1 and the collector of Q_1. Typical values for the circuit are given in the figure.

Karl Springer, Member Technical Staff, Hughes Aircraft Co., Culver City, Calif.

Dynamotor Power Source Supplies Low Voltage, High Current

Several amperes of well-filtered dc power with a continuously variable output voltage can be obtained from a dc conversion generator, or dynamotor. Such an energy source is very useful when working with power transistor circuitry or servo amplifiers.

An examination of one of these dynamotors, Fig. 1, reveals that the field is excited in shunt with the low-voltage armature winding. Thus, when power is applied in the normal fashion to the machine, the field is automatically excited. The high-voltage armature winding provides the output.

By reversing the direction of power flow, it is possible to obtain an output from the low-voltage winding. Excitation is obtained from a high-voltage supply, as shown in Fig. 2. Because the field structure is common to both armature windings, the ratio of voltages developed is determined entirely by the ratio of active conductors in these windings. It is virtually independent of the field current. However, the field current determines the motor torque and speed. In general, high field current is associated with low armature speed and vice versa. Residual magnetism in the steel poles insures that the motor is self-starting.

Used as shown in Fig. 2, the dynamotors do not have their full rated power handling capacity. This is because additional power must be supplied to account for the inefficiency of the machine. Despite the reduced rating, sufficient output can still be obtained to make the reverse method of operation useful.

Fig. 3 shows the results of such operation. The motor used was manufactured by Eicore. It was rated at 14 v, 6.4 amp input, 330 v, 150 ma output. With the rated high-voltage current of 150 ma, only about 3 amp could be drained from the low-voltage end, illustrating the unit's reduced power handling capability.

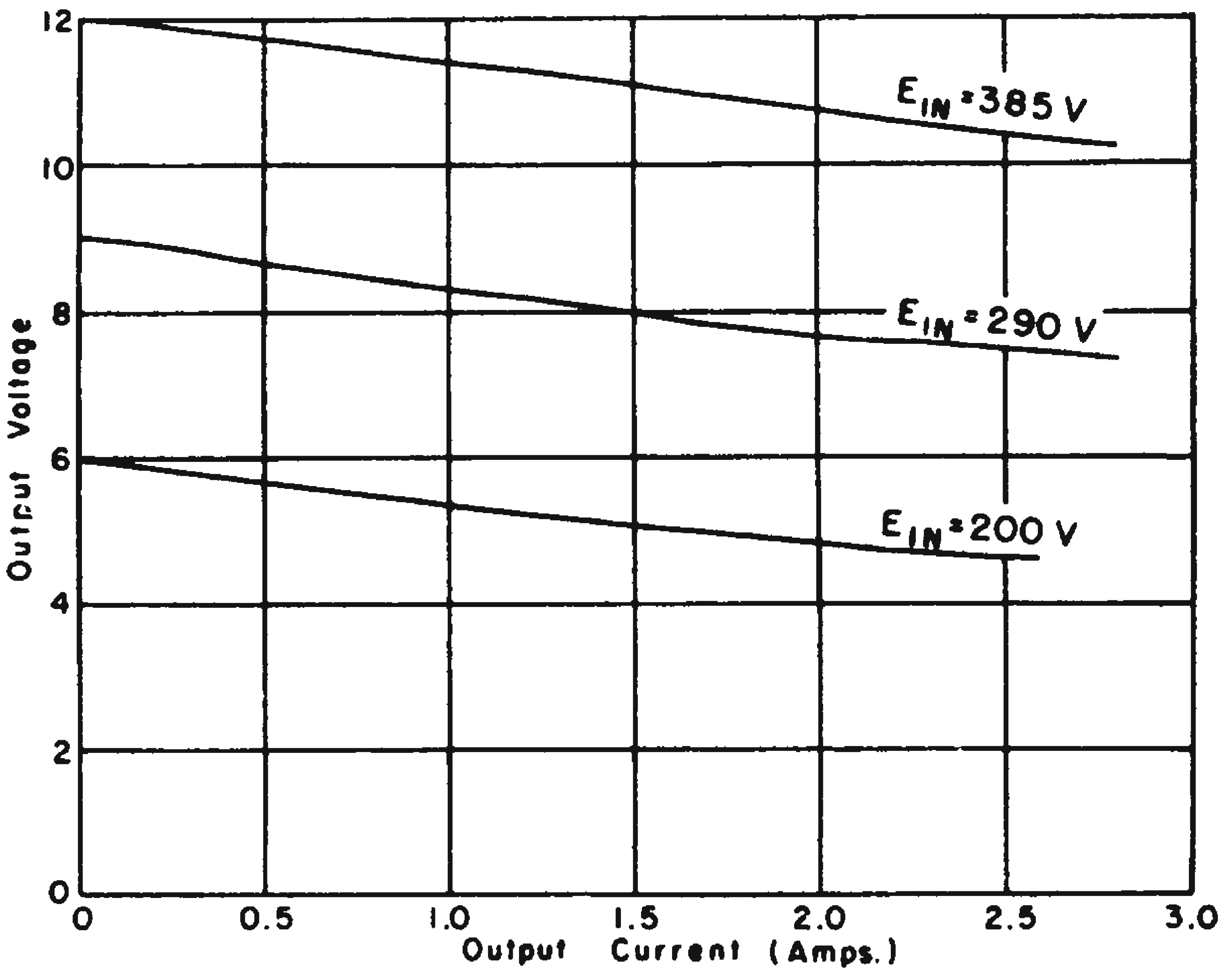

Fig. 3. The regulation curves for a reverse operated dynamotor, connected as in Fig. 2.

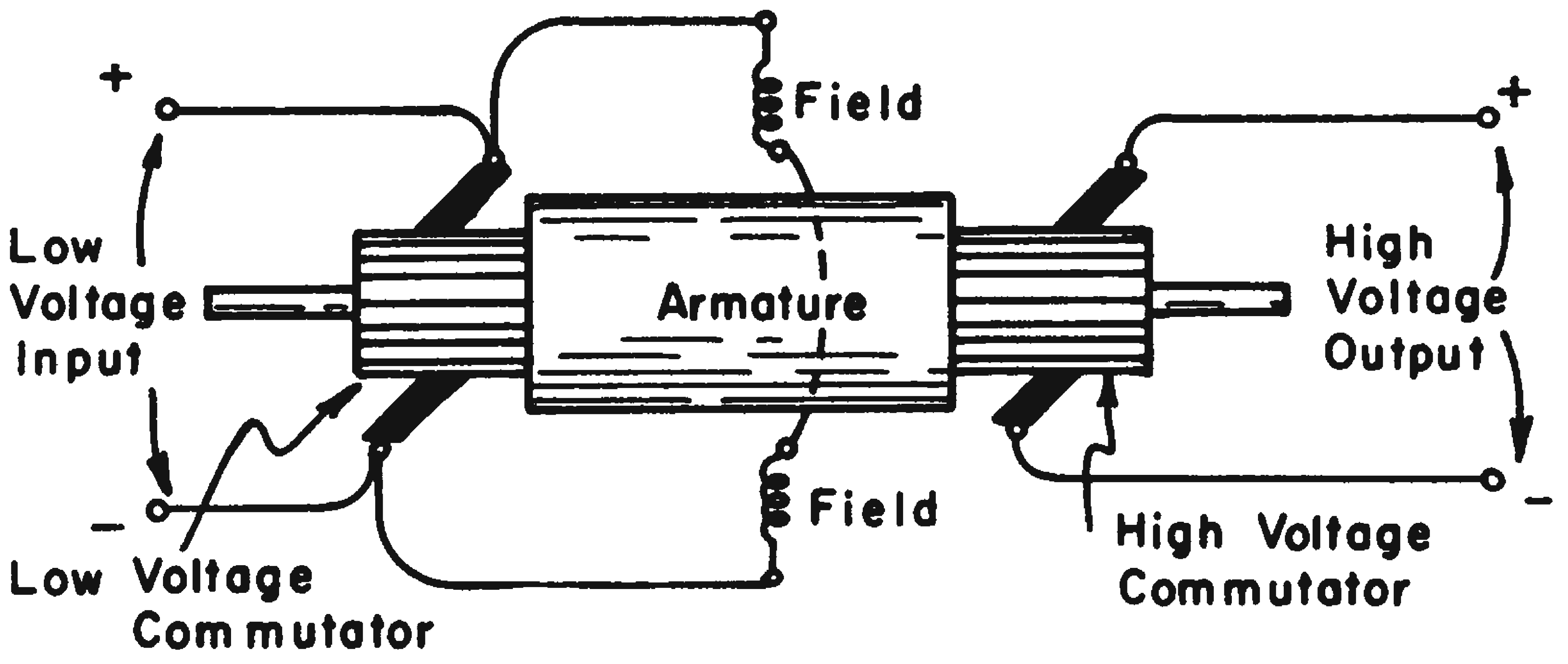

Fig. 1. In normal dynamotor operation, a low-voltage, high-current input is converted to a high-voltage, low-current output.

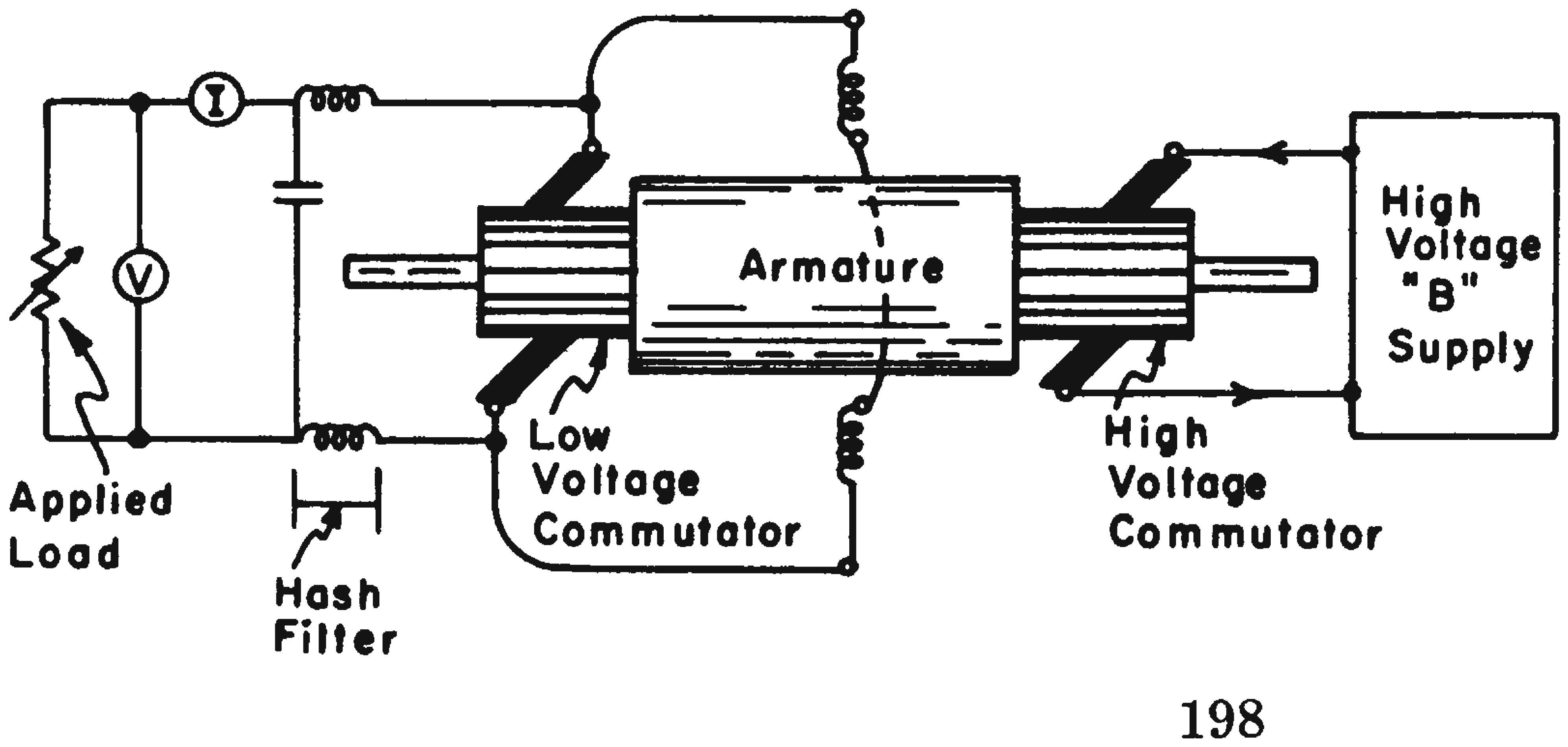

Fig. 2. Operated in reverse, the dynamotor supplies a low-voltage, high-current load from a standard high-voltage power supply.

Because of internal resistance in the machine, the output voltage falls off practically linearly with increased load. In each case, the output voltage level was set by adjusting the output varies with load, it was found to be satisfactorily constant for the current range needed. If more stringent specifications were imposed on the regulation, a suitable feedback circuit could be designed to regulate the output.

There are several advantages in using a dynamotor to obtain the low-voltage energy. First, the output voltage can be easily varied by adjusting the level of the dc voltage applied to the high-voltage commutator. Second, because the ac component appearing in the output is mostly high frequency ripple, filtering is not difficult. The ripple can be reduced to a low level with a simple hash filter. Also, because only commonly available items are used, this low-voltage source is relatively inexpensive and easily built.

Jack Bacon, Ohio State University, Columbus, Ohio.

Four Extra Diodes Insure Load Sharing in High Voltage Bridge

Equal load sharing between series rectifiers in high voltage, full wave bridge circuits can be easily attained by using only four extra diodes. When connected as shown, the extra diodes eliminate the need for complex RLC matching circuits in any of the legs. Such matching is especially necessary when high frequencies, in the tens or hundreds of kilocycles are applied to the bridge. At these frequencies the junction switching and peak inverse loads depend on matched resistance, capacitance, and leakage characteristics of each diode.

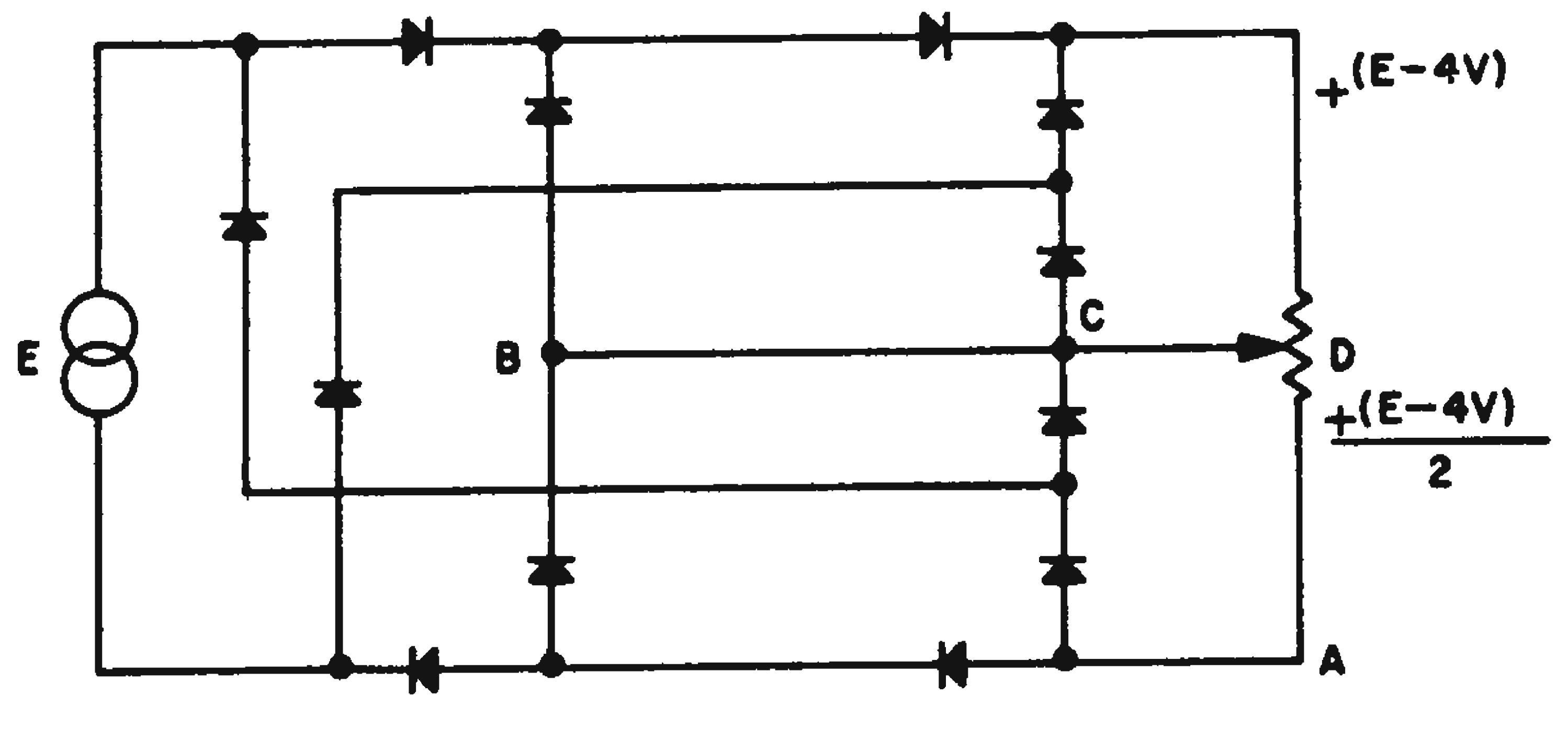

Four diodes at *B* and *C* provide equal load sharing between series rectifiers in each leg of the bridge.

Referring to the figure, if points *B* and *C*, and if necessary a third equipotential point *D* bisecting the load are joined, each diode will switch at precisely the same moment. Also, the two diodes in each leg will share inverse and forward peak voltages.

Considering one end *A* of the load as zero reference potential, and each diode as having a forward voltage drop 'V', it can be shown that the potentials

$$V_{AB} = V_{AC} = V_{AD} = 1/2(E - 4\text{ v})$$

As an economy measure, resistors can be substituted for the four extra diodes at *B* and *C*.

Patrick F. Howden, Systems Engineer, Consolidated Systems Corp., Monrovia, Calif.

Simple CRT High Voltage Supply Regulator

A high voltage negative supply for a CRT had to be regulated to ±2%. The regulating device was limited to 1/2 6SL7 which was available in the set and was to be as inexpensive as possible. The simple solution illustrated more than satisfied these requirements.

The plate of the 6SL7 was connected to the end of the transformer secondary that is normally grounded. A potentiometer was inserted in the supply bleeder. The design required only the addition of this inexpensive potentiometer. The results exceeded the specifications.

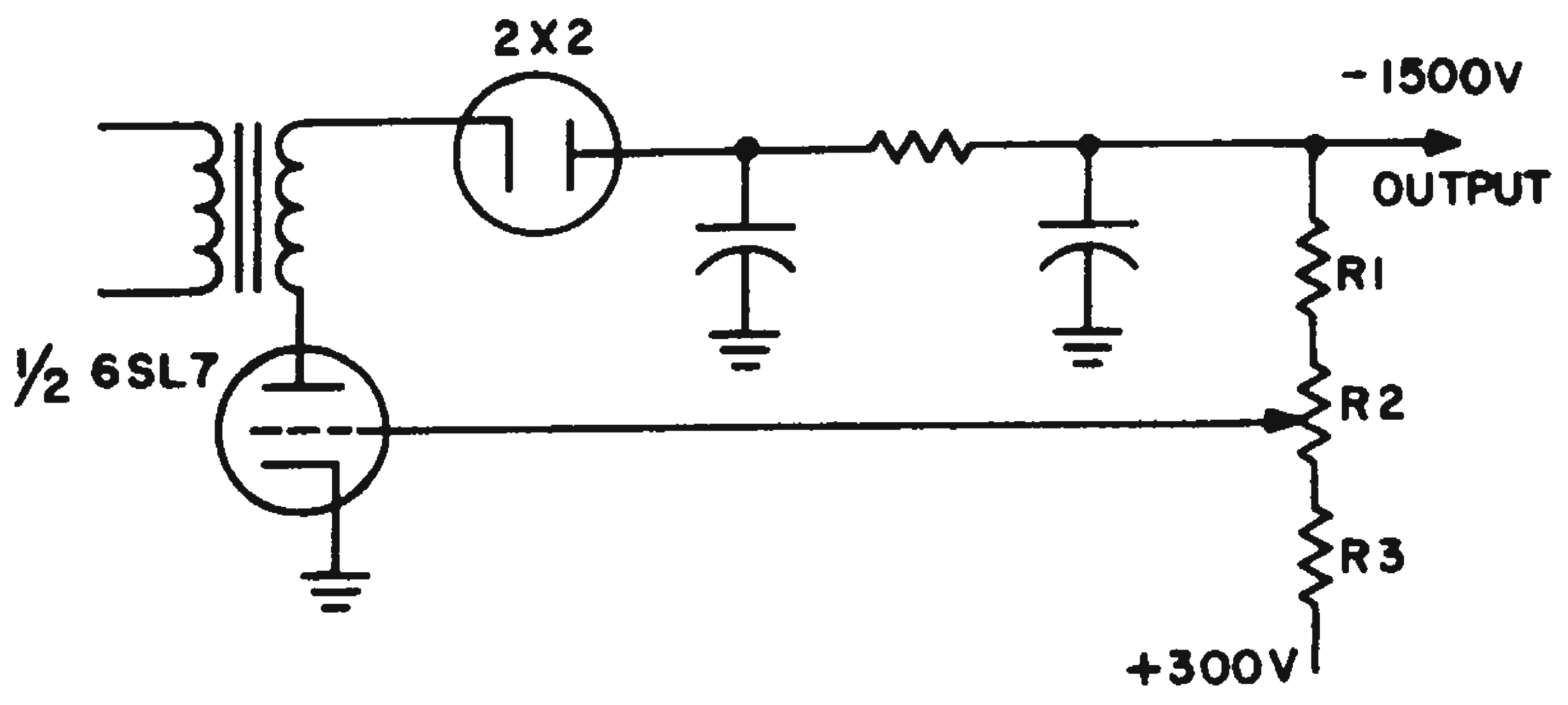

CRT Supply was regulated with an available 1/2 6SL7 and a pot.

Sol Abrams, Design Engineer, Polarad Electronics Corp., Long Island City 1, N.Y.

Relay-Zener Circuit Protects Nickel-Cad Batteries

When individual nickel-cadmium cells are used to make up a battery, excessive discharge may cause permanent damage to some of the cells. This occurs because all of the cells do not have identical capacities. The lower capacity cells become completely discharged while other cells are still capable of delivering volt-amperes. Thus, the cells which are discharged first, reverse polarity, gas profusely, and blow up. The circuit shown can protect the battery by recharging it when danger signs are near.

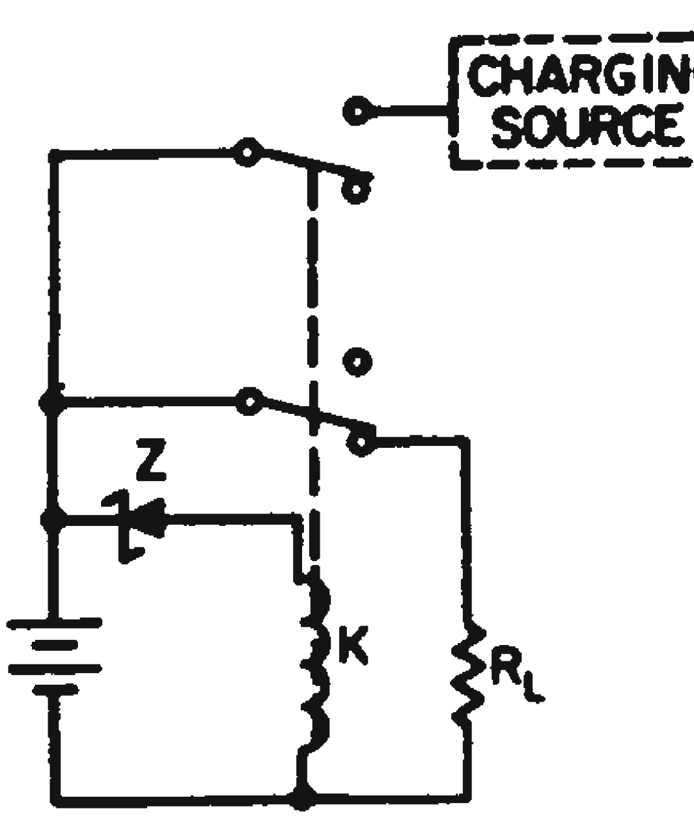

If individual nickel-cadmium cells reverse polarity after discharging, relay *K* is activated and battery is recharged.

Relay *K* should be a low current type to keep the drain on the battery low. The Zener diode voltage should be about 60 per cent of E_b. (The charging source and additional set of contacts are of course optional.)

Robert A. Durand, Electrical Engineer, Martin Co., Baltimore, Md.

Emitter-Follower Stabilizes Two-Transistor Regulator

A conventional two-transistor voltage regulator, Fig. 1a, can be made more stable if an emitter-follower is added as shown in Fig. 1b.

In the conventional unit, a decrease of the input voltage, V_1 will decrease the voltage drop across R_1. Consequently, both the collector and base current of T_1 will drop. This means that output voltage V_2 will also decrease slightly.

An increasing load current will lower the output voltage because the base current of T_2 requires a decrease of the collector current of T_1. If the base current of T_1 is derived partly from V_1 a decrease of the collector current can be obtained without a drop of V_2. This is accomplished with resistor R_5. The adjustment of R_5 can be made to compensate for the effect of V_1 (minimum dc variation and ripple) or to compensate for the total decrease of V_2 (zero output impedance).

The circuit of Fig. 1b allows these to be made more nearly equal because the emitter-follower reduces the loading of T_1 by the base current of T_2. In many cases, this emitter follower will be required to increase the output current range.

Since R_5 is not a part of a feedback loop, it does not affect the stability of the circuit.

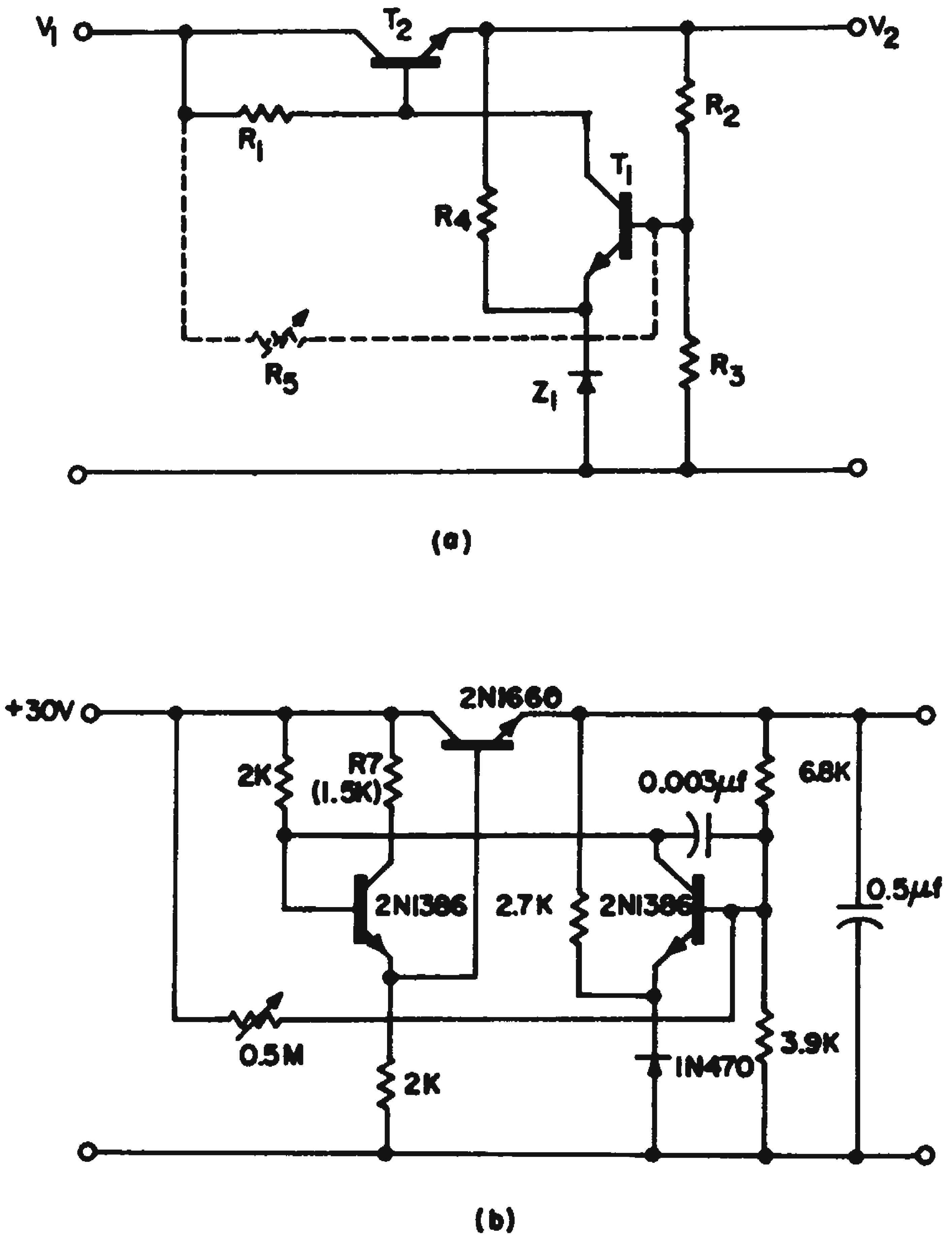

Conventional two-transistor voltage regulator, *a*, can be made more stable by adding emitter-follower as shown in *b*.

The output can therefore be shunted with capacitors of any size to obtain further ripple reduction.

Resistor R_7 limits the collector current of T_3 and provides overload protection. Hence, a low-power transistor can be used. If the no-load voltage of V_1 is about $2V_2$, the regulator can be made short-circuit proof by properly choosing R_7 in combination with the output resistance of the power supply.

Robrecht Bosselaers, Senior Engineer, Raytheon Co., Needham Heights, Mass.

Junk-Box Converter Supplies High DC Voltage

The simple and inexpensive dc-to-dc converter shown in the figure can supply 400 vdc and it is built from only junk box parts.

The converter consists of a multivibrator built from a pair of power transistors (pnp or npn), a 6.3-v CT filament transformer, and two 330-ohm resistors. After it is stepped up, the square wave output is voltage-doubled to provide the final high voltage.

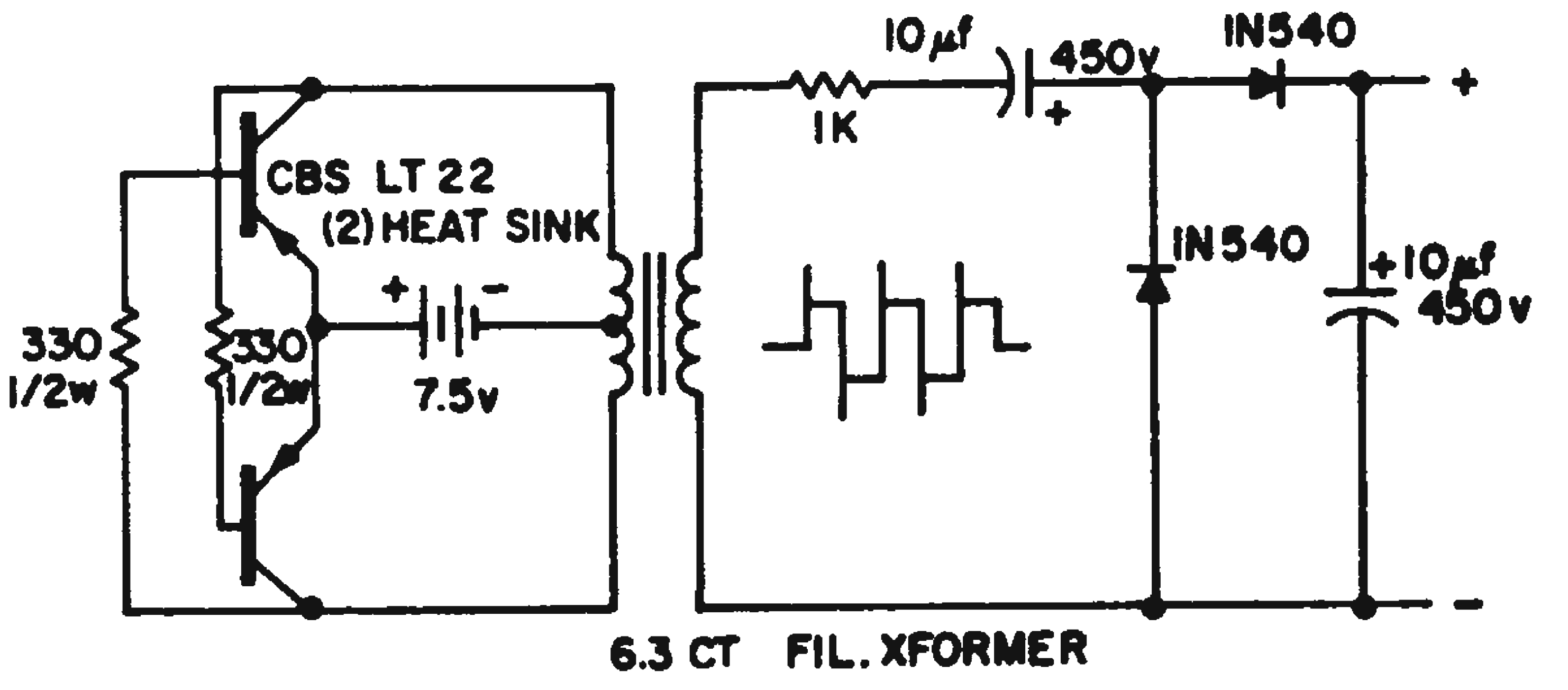

400-v output is supplied by this inexpensive dc-to-dc converter supplied from 7.5-v source.

Depending upon the transistors, transformer and supply voltage and (7.5 v for a 400-v output) the circuit can supply sufficient power for driving several low-power tubes.

William Gutman, Project Engineer, Kearfott Div., General Precision, Clifton, N. J.

PNP Circuit Supplies Constant-Current Into Load

A 1-amp constant-current source was required that would operate with a voltage swing of about 30 v. Further, election flow had to be from the source into the load.

These specifications were obtained by applying current feedback around a pnp power transistor as shown in Fig. 1.

The simplest solution, Fig. 2, would have been to use an npn power transistor and Zener diode in a grounded-base circuit. This was ruled out, however, because of the cost and relative scarcity of such npn units.

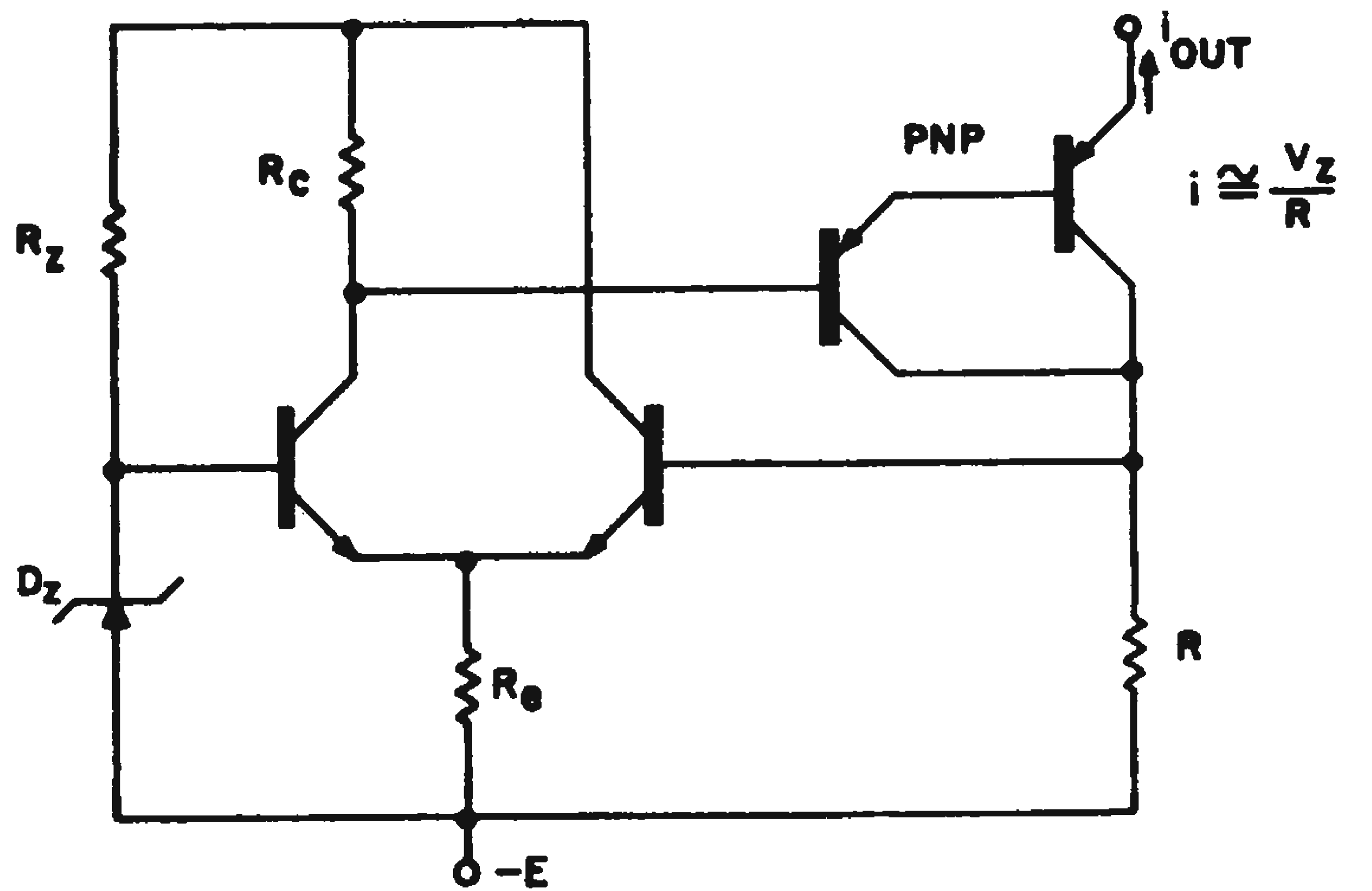

Fig. 1. Pnp power transistor with current feedback furnishes constant amp current into load, operates 30 v with voltage swing.

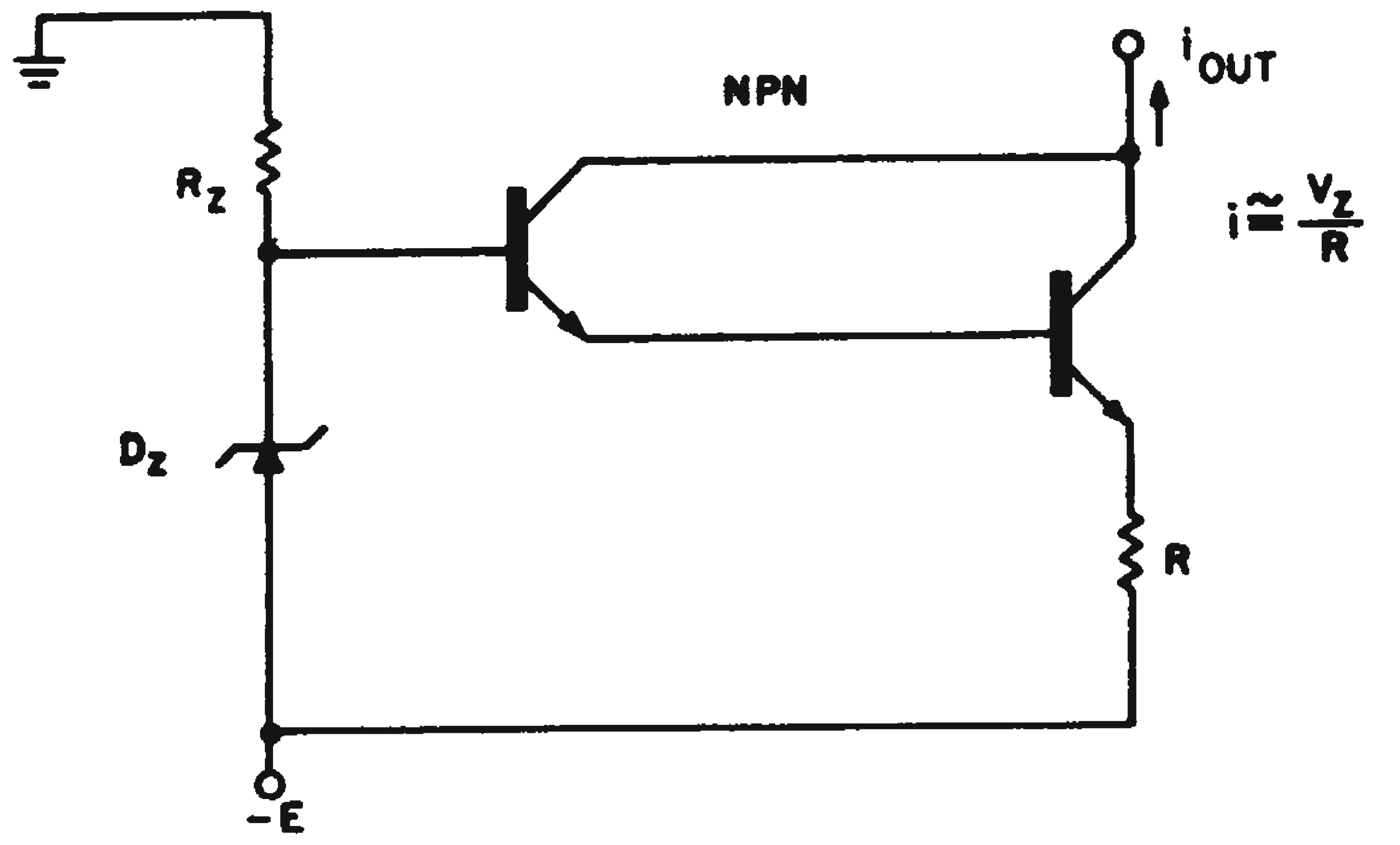

Fig. 2. Simpler, more costly, circuit would have used npn power transistor and Zener diode.

In the pnp-feedback circuit, the Darlington connection of the power transistor and its pnp driver yield a high current gain. The base current as well as the collector current of the output transistor are delivered to the load. Their level is controlled by the feedback circuit. Thus, the output current does not depend upon V_{be} of the transistors as it would with the circuit of Fig. 1. And, because of the large amount of feedback, the negative supply need not be regulated.

Charles Wesley Rhodes, Project Engineer, Tektronix Inc., Beaverton, Ore.

Variable DC Output Obtained From SCR Circuit

Highly efficient, reversible-dc power sources can be quite easily built around silicon-controlled rectifiers (SCR's). In the circuit shown (*a*), two SCR's fired alternately by unijunction transistors Q_1 and Q_2, are used to control the dc power output. (The output characteristic is shown in (*b*). The rectifiers, in turn, are controlled by a varying-amplitude ac signal of reversible phase.

The controlling ac signal is fed into a diode discriminator, circuit *A*. Dc output appears across resistors R_1 and R_2, and is filtered by capacitors C_1 and C_2. Diodes CR_9 and CR_{10} clamp the negative side of the output to ground. Thus, a positive voltage feeds either charging circuit R_5 and C_3 or charging circuit R_6 and C_4.

Capacitors C_3 or C_4 charge until the peak voltage of the unijunction is reached. The unijunction then fires its associated SCR. The rectifier conducts until the supply voltage traverses zero. At this point the unijunction breaks down, discharging capacitors C_3 and C_4 to ground.

Negative feedback is used in the circuit (circuit *B*) to decrease the "dead space" in

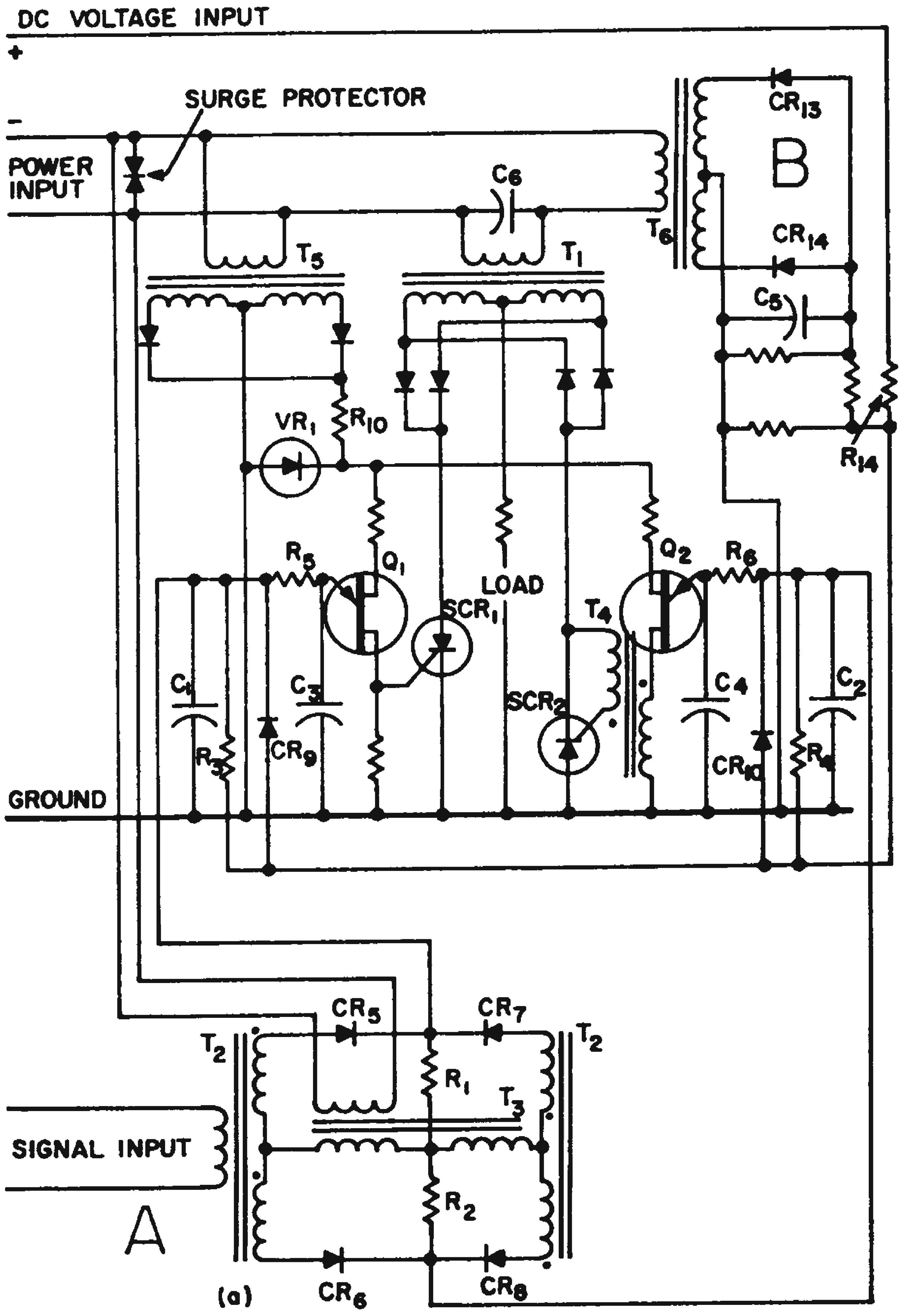

(a) Unijunction transistors fire SCR's in supply whose output depends upon varying-amplitude ac signal.

the output characteristic and to yield more linear control. A positive dc voltage is applied to the unijunction emitters through resistors R_{14}, R_3, and R_5 for Q_1 and R_{14}, R_4, and R_6 for Q_2. This voltage is set just below the firing potential of the unijunctions.

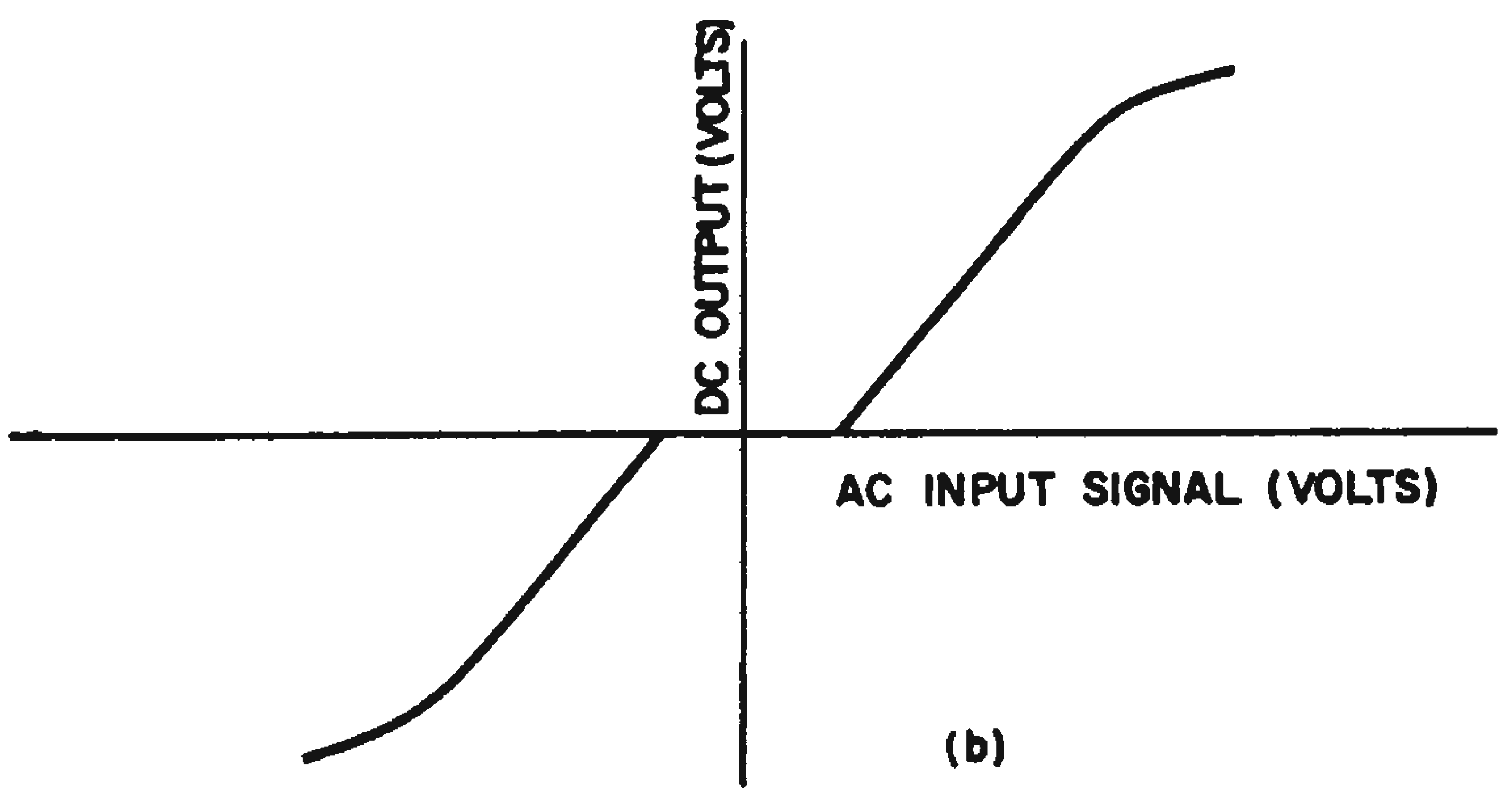

(b) Variable-phase ac input controls dc output. (zero phase to right, π-phase, left.)

Negative feedback in the form of a negative voltage is applied to the unijunction emitters. This voltage is developed by current transformer T_6, diodes CR_{13} and CR_{14}, and capacitor C_5. With zero load current, there is negligible current in the transformers T_1 and T_6. As the load increases, current flows through transformers T_1 and T_6 causing a negative voltage across capacitor C_5. This reduces the dc voltage fed to the unijunctions. The greater the load current, the greater the current in transformer T_6, and the greater the negative voltage fed back to the unijunctions. With the arrangement shown, the dead band region can be reduced to below 5 per cent of the linear region.

Benjamin Fennick, Engineer, Kearfott Div., General Precision, Inc., Little Falls, N. J.

Added Stage Protects Regulator From High Voltage

The fairly-common voltage regulator shown can be protected from excessive power supply voltages by adding the circuitry indicated in brackets. This extra transistor stage protects the regulator in the event that a short occurs and the supply voltage exceeds the $V_{CE\ (max)}$ of the transistors.

Without the additional stage, when a short occurs R_2 and *CR2* shunt the emitters of transistors Q_2 and Q_3. These transistors have the full supply voltage across. If this voltage is too great, they can be destroyed.

With the additional stage, R_1, C_1 and Q_1 act as a filter and current regulator under normal conditions. If a short occurs in the load the supply voltage is split between Q_1 and Q_3 by diode *CR1*. This allows R_2 and *CR2* to provide short circuit protection while guarding the components against damage.

Hugh L. Bain, Engineer, Raytheon Co., Bedford, Mass:

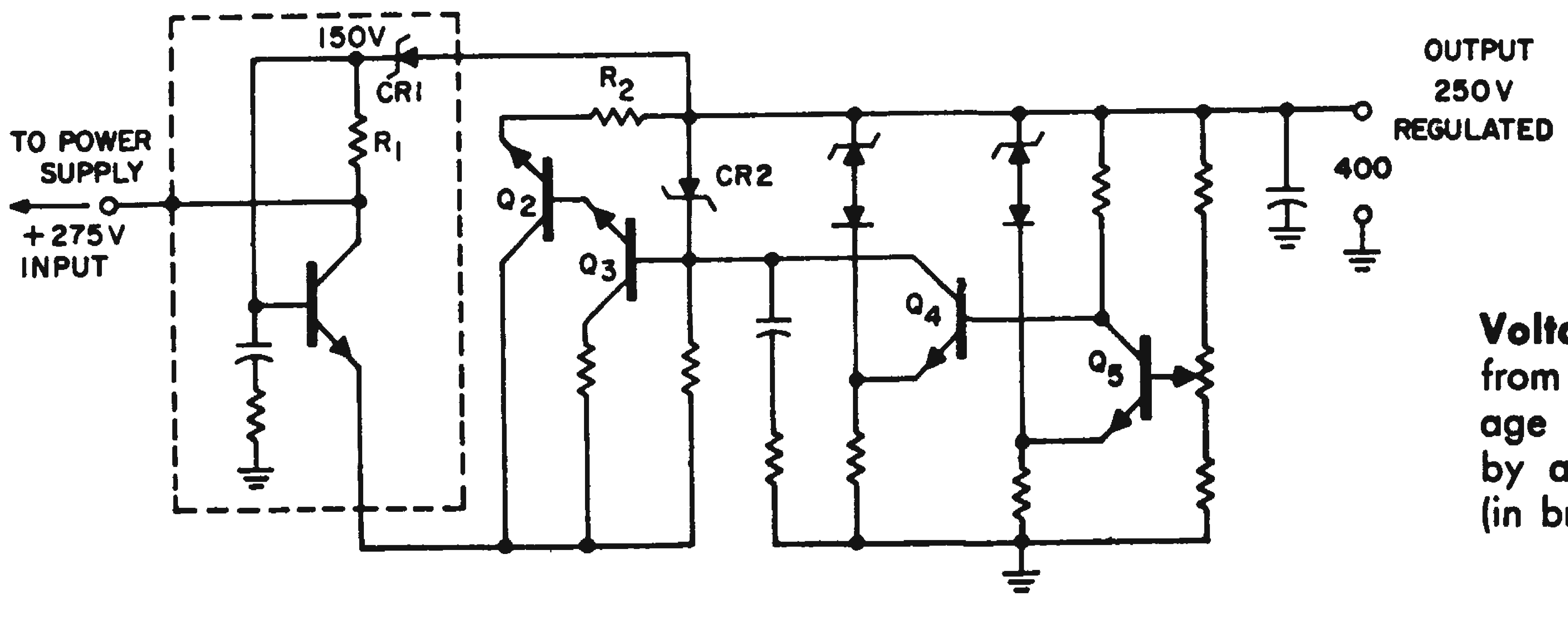

Voltage regulator is protected from excessive power supply voltage in the event of load short, by adding an extra input stage (in brackets).

Currector and Zener Diode Reduce Ripple In Power Supply

The constant current characteristic of a currector—a relatively new solid-state device—can be combined with the constant-voltage characteristic of a Zener diode to give a simple power supply with very low ripple.

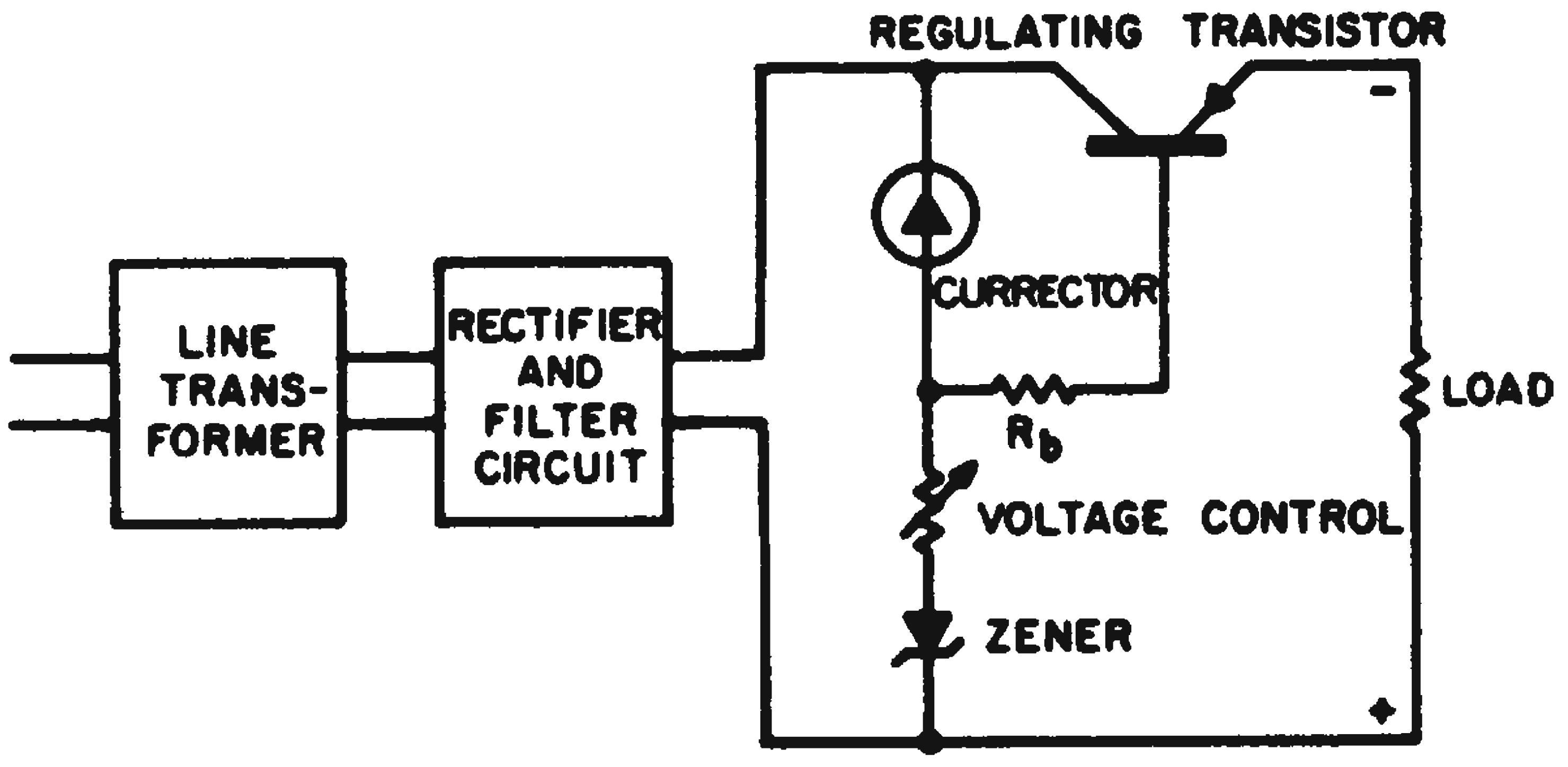

Fig. 1. Series connected currector-Zener reduces ripple in power supply.

The ripple voltage appearing at the input to the base resistor is attenuated by the factor

$$\frac{R_z + R}{R_z + R + R_c}$$

where:

R_z = dynamic resistance of the Zener, which is small.

R = voltage control resistor, which may be kept small.

R_c = dynamic resistance of the currector, which is very large.

Resistor R_b protects the transistor from excessive base current in case of a short circuit. This arrangement provides a simple, voltage controlable power supply with good regulation and low ripple.

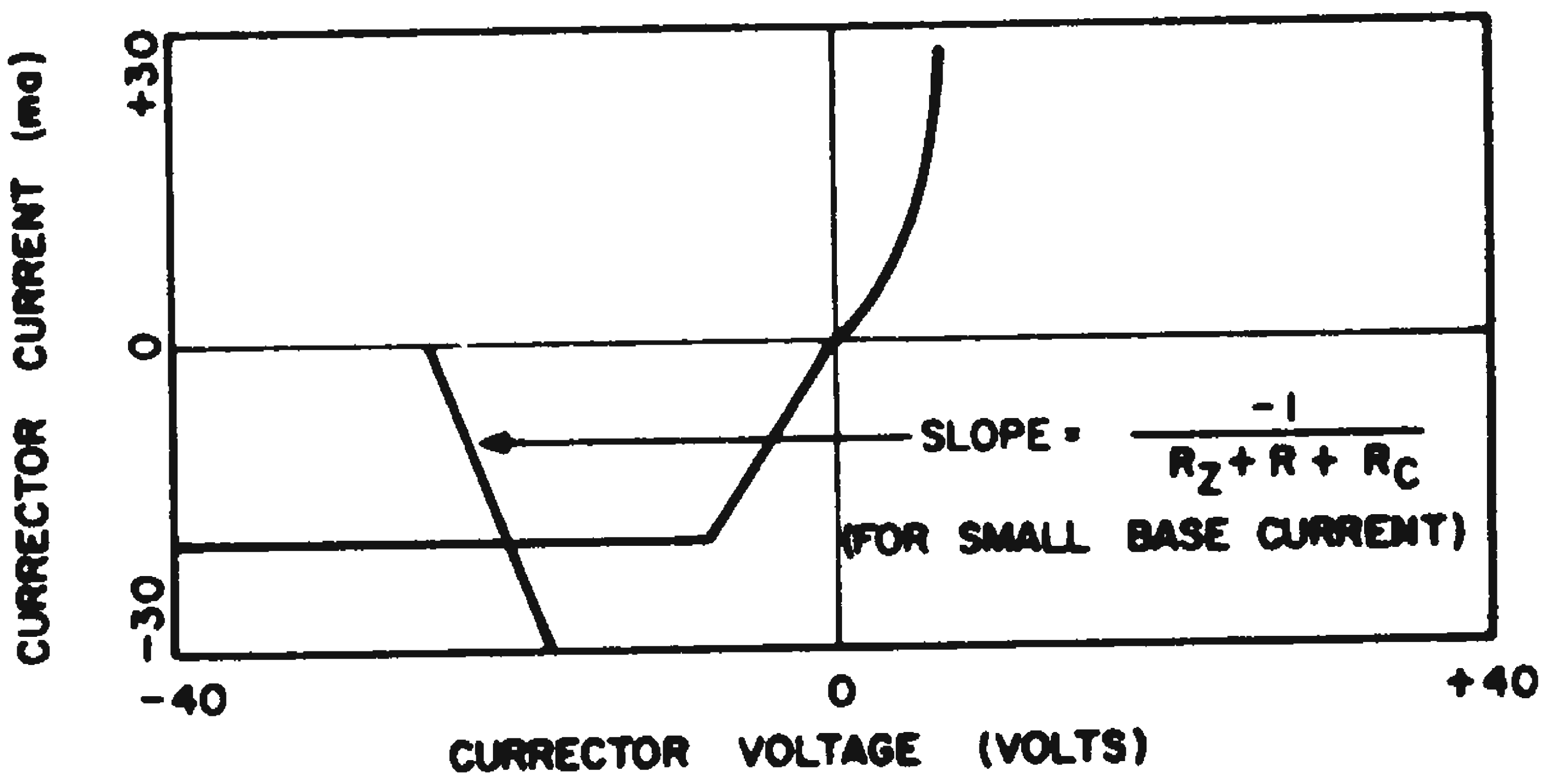

Fig. 2. Typical characteristics of currector.

Edward P. Mitchell, member of technical staff, Hughes Aircraft Co., Fullerton, Calif.

Light Bulb Improves Zener-Regulated Supply

In designing simple Zener-diode regulating supplies of the type shown in Fig. 1, it is necessary to allow for the minimum and maximum values of line voltage and Zener diode voltage. A compromise must be made between the total power dissipated and the degree of output voltage regulation.

The voltage regulation of the power supply shown in Fig. 1 can be improved by increasing the secondary voltage of the transformer. But this results in higher power dissipation in the series limiting resistor and requires higher voltage ratings for the capacitor and rectifier.

	75-ohm resistor	No. 1447 lamp
Minimum Zener Current	19 ma	20 ma
Maximum Zener Current	138 ma	57 ma
Minimum Zener Power	0.38 w	0.40 w
Maximum Zener Power	3.30 w	1.37 w
Maximum Lamp/Resistor Power	2.35 w	0.97 w
Maximum Total Power	5.65 w	2.34 w

A significant improvement in over-all circuit performance can be achieved with no increase in cost by substituting a properly rated incandescent lamp for the series limiting resistor. The increase in the effective resistance of the lamp with applied voltage stabilizes the current through the Zener diode. For the case shown, the type 1447 lamp proved an ideal choice since it has a resistance of about 75 ohms under the minimum voltage conditions (minimum line voltage and maximum Zener voltage) and is within its nominal 18-v rating under maximum voltage conditions (maximum line voltage and minimum Zener voltage).

A comparison of the two cases is shown in the table. It is seen that the minimum Zener current is equal in both cases, as required. However, the total range of Zener current is three times larger with the resistor than with the lamp. The voltage regulation will, accordingly, be about three times better with the lamp than with the resistor.

With the lamp the total Zener power dissipation is low enough to permit a 3.5-w unit to be used conservatively. With the resistor, a 10-w unit probably would be required. Since the average operating lamp voltage is approximately 2/3 its rated value a longer than usual lamp life can be expected.

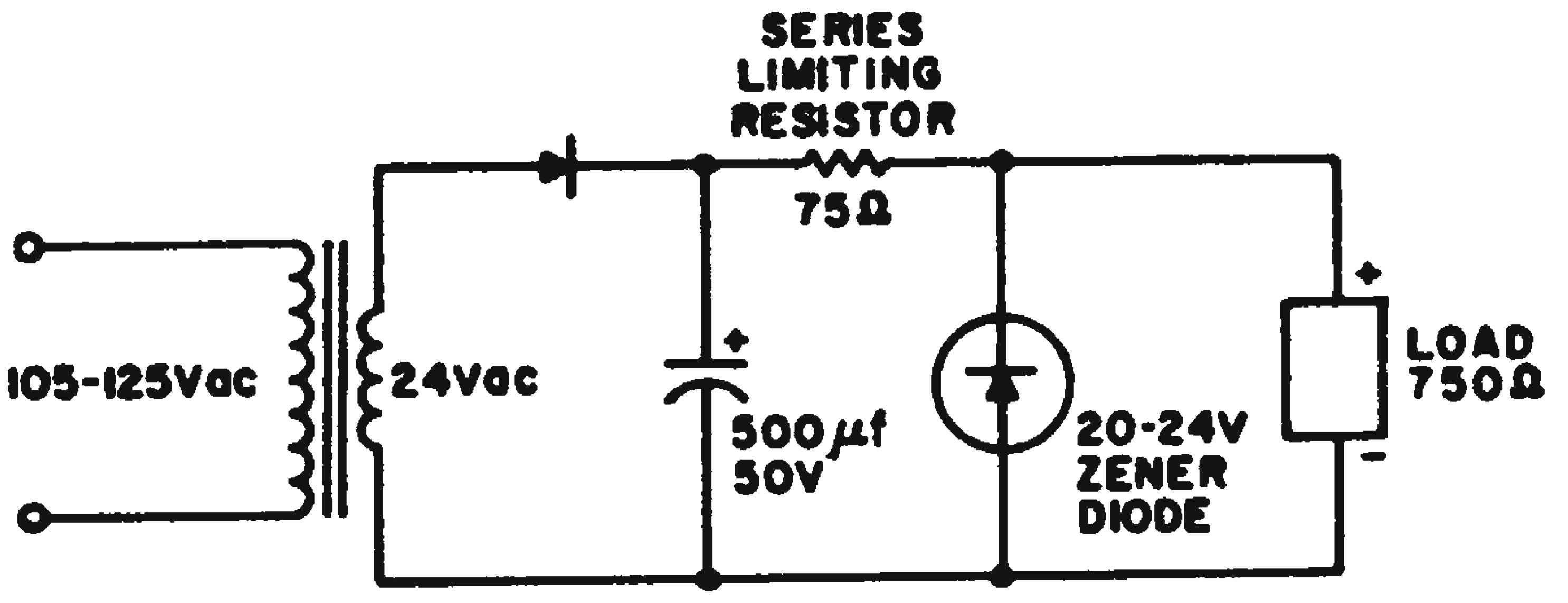

Circuit performance of this simple Zener-diode regulated power supply can be improved by substituting incandescent lamp for the series limiting resistor.

In addition to its function as a series regulating element the lamp also may serve as a pilot lamp or as a trouble-shooting aid.

T. P. Sylvan, application engineer, General Electric Co., Syracuse, N. Y.

Regulated Power Supply Uses Low-Cost Diodes

A simple circuit was required to provide a regulated, temperature-stable, high-voltage dc supply for a fixed load. Methods using vacuum tubes, voltage-regulator tubes or high-voltage Zener-diode strings are elaborate and expensive.

The circuit shown in the figure uses inexpensive, low-voltage Zener diodes with about 5 to 7-v breakdown voltages for 10-w dynamic impedance and low temperature coefficient. Zener diodes D_1, D_2 are placed back to back to operate on both halves of the input voltage.

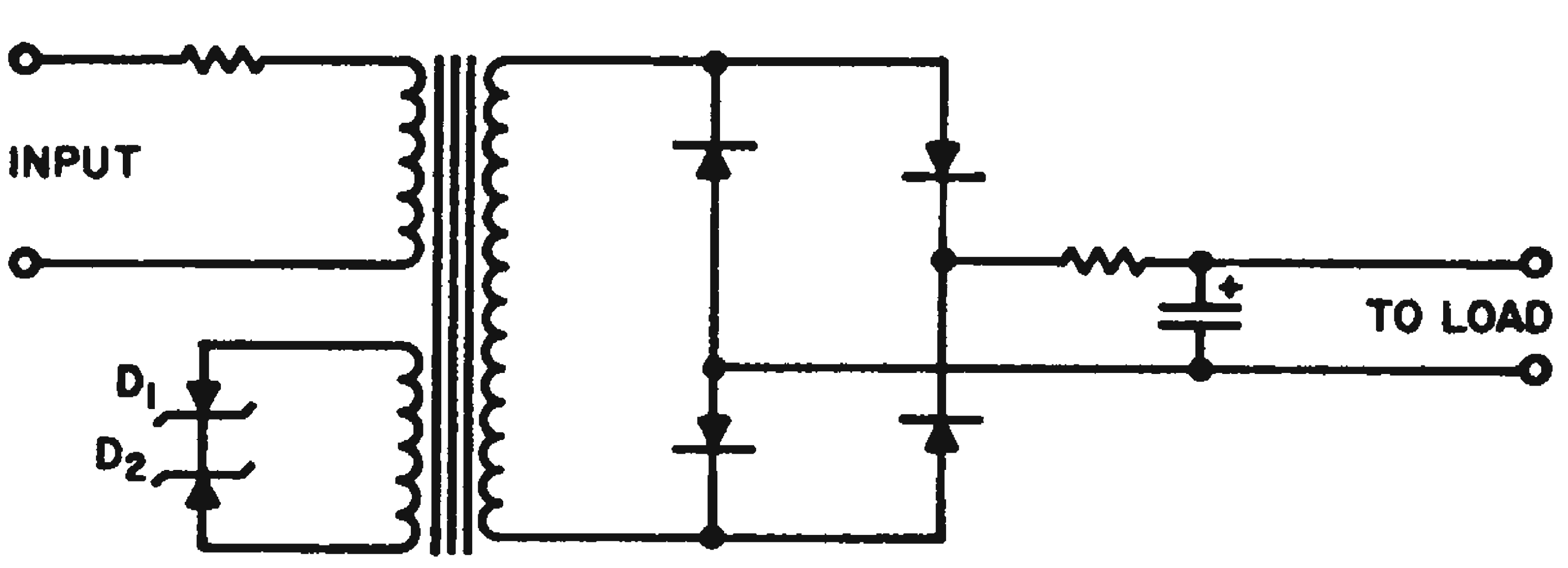

Back-to-back low voltage Zener diodes provide line regulation.

The Zener voltages are multipled by the turns ratio between the primary and low voltage winding. This effectively places a high voltage, double-ending Zener diode in parallel with the primary winding, thus regulating the input voltage to the transformer. The output on the secondary will be a clipped sine wave, which will ease filtering problems. If ultra-low temperature variation is desired, the negative temperature coefficient of the Zener diode in the forward direction can be cancelled out by picking a Zener diode with a positive temperature coefficient in the reverse direction. To insure a minimum of tilt in the output, a transformer with good low-frequency response should be used.

Joseph La Fiandra, project engineer, EDO Corp., Yonkers, N. Y.

Modified Regulator Is Made More Sensitive to Output Changes

In a conventional series regulator circuit, Fig. 1, a change in output voltage, ΔE_o, is seen at the base of Q_2 as $\Delta E_o/n$, where n is the voltage-division ratio determined by $R_1 - R_2$ and R_3.

If n were to approach unity, the regulator would be much more responsive to ΔE_o.

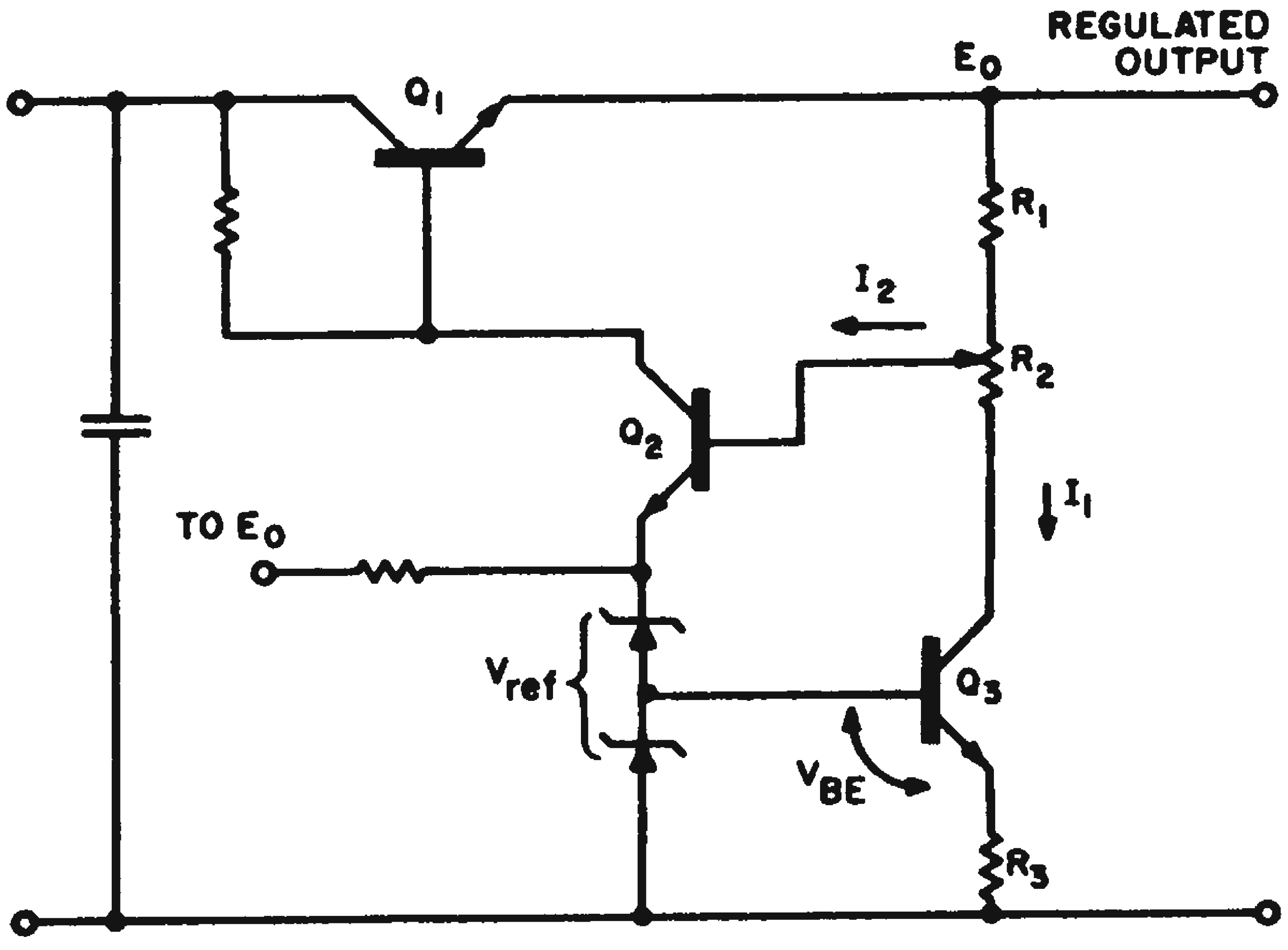

$$I_1 \simeq \frac{\frac{V_{ref}}{2} - V_{BE}}{R_3}$$

Fig. 1. In conventional series regulator, charge in output voltage, ΔE_o, is seen at base of Q_2 as $\Delta E_o/n_o$, where n is voltage division ratio of $R_1 - R_2$ and R_3.

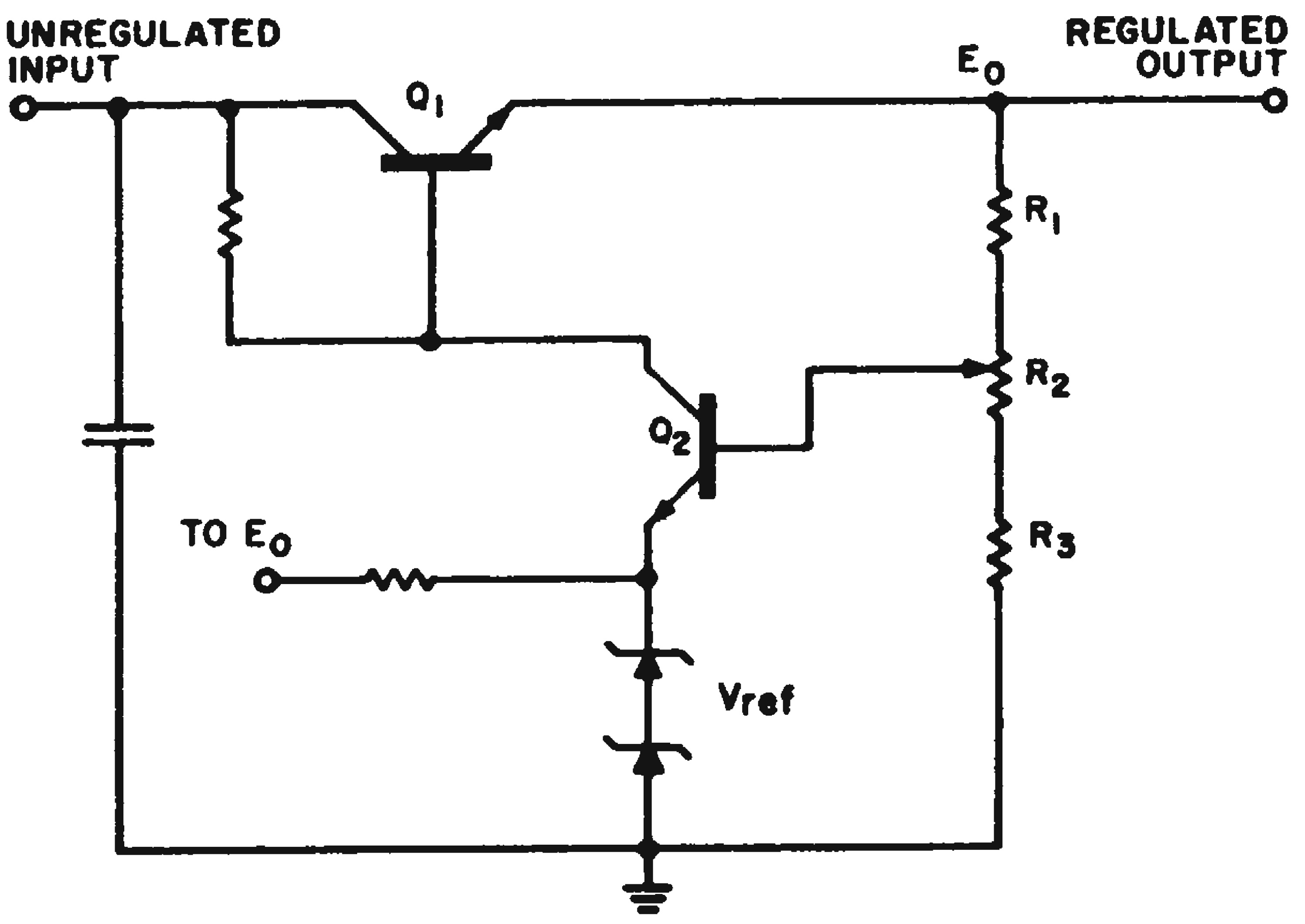

Fig. 2. Modified regulator allows *n* to approach unity so that regulator is more sensitive to changes in output voltage.

This can be done with the circuit shown in Fig. 2. The method is applicable to both vacuum tube and transistor series regulators.

In this circuit Q_3 is a constant current source so that:

$$I_1 >> I_2 \text{ and } I_1 \cong \frac{V_{ref}}{2R_3}$$

Since I_1 is independent of E_o, a change in E_o or ΔE_o, is seen at the base of Q_2. Thus, this circuit avoids the voltage division that is inherent in the series regulator of Fig. 1. This can also be accomplished by replacing R^1 of Fig. 1 by a Zener diode. However, this would lead to temperature drift problems that are several orders of magnitude greater than the temperature drift associated with the circuit of Fig. 2.

Marvin Shapiro, electrical engineer, Vector Manufacturing Co., Southampton, Pa.

Solid-State Oscillator Supplies Three-Phase Power

In many applications it is desirable to replace rotating equipment with static equipment. A static source of 3-phase power is shown here. The power output of this circuit is limited only by the power-handling capability of the components.

Silicon-controlled rectifiers are available that can handle currents as high as 70 amp at 300 piv. Hence, it would appear that the upper limit on power-handling capacity of this circuit is 21 kw.

A one-watt oscillator was designed to test the technique. The filter and load at *X*-*X* were replaced with a 100-ohm resistor. The waveforms of one phase of the oscillator are as shown. The other phases were the same, except for a 120-deg phase shift. A slight potentiometer adjustment was required to balance the circuit.

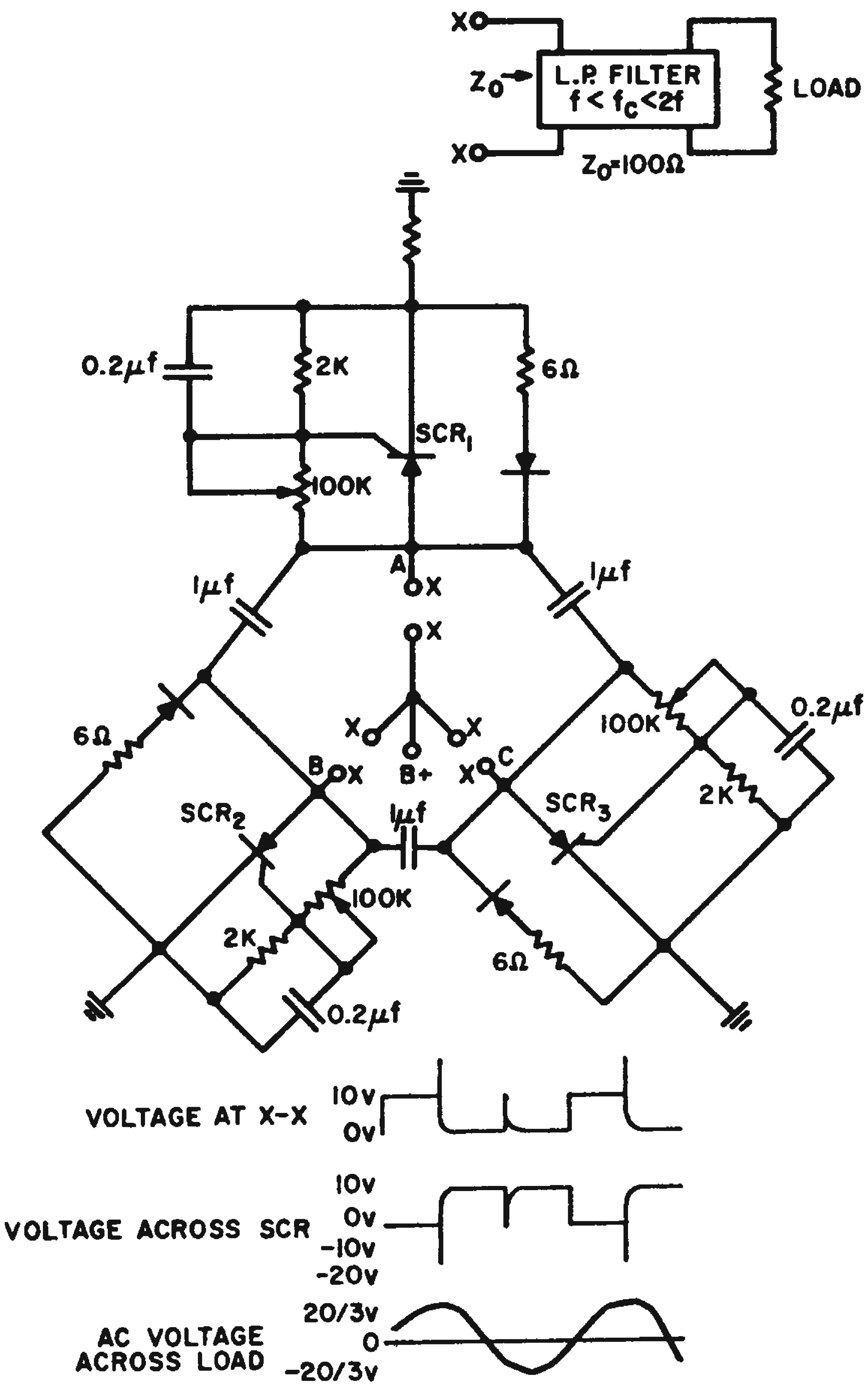

FUNDAMENTAL: $\frac{20f}{\pi} \sin\frac{\pi}{3f} \cos 2\pi ft \cong \frac{20}{3} \cos 2\pi ft, f >> 6\text{CPS}$

Basic configuration of 3-phase power source with waveforms for one phase.

The delta capacitor arrangement causes commutation of the SCRs. When B+ is applied, one of the SCRs will trigger on as the voltage on its gate capacitor charges sufficiently. Assume SCR_1 is triggered on first. The voltage at points *A*, *B* and *C* will go to ground potential. The voltage at point *A* will remain at ground potential and point *B* and *C* will increase to B+ potential. At this time one of the remaining SCRs—say SCR_2—will trigger on. If SCR_2 triggers on, point *B* will go to ground potential. This will cause a negative potential to appear across SCR_1, turning if off. Just before SCR_2 triggers on, *B* and *C* are at the same potential. When point *B* goes to ground, the charge on the capacitor between A and C will redistribute between this capacitor and the capacitor between points B and C. Hence, just after SCR_2 triggers on, point C will be at the highest potential; therefore, SCR_3 will be the next to trigger on. After SCR_3 triggers on, which triggers SCR_2 off, SCR_1 will trigger on again. In this way each SCR will have a duty cycle of 1/3 and three-phase power will be generated. The filter before the load is a low-pass filter with a characteristic impedance of 100 ohms which passes only the fundamental and dc components of the voltage at X-X.

If the pots are adjusted accurately, the voltages across the three loads will be sinusoidal and 120 deg out of phase with respect to each other.

William B. McCartney, Jr., engineer, Westinghouse Electric Corp., Baltimore, Md.

"Junk-Box" Current Limiter Protects Breadboard Equipment

One of the most discouraging aspects of electronics laboratory work is an accidental short circuit, thermal runaway or other mishap that causes damage or destruction of valuable components in a breadboard or other developmental circuit. Therefore, a current-limiting device that can be inserted between the output of any dc power source and a circuit under test often is desirable.

The circuit shown here is a simple current limiter, which can be used with any existing dc power source. Since it uses only four components, it can be assembled quickly in temporary form from junk-box parts.

Transistor T_1 is a germanium pnp unit and D_1 is a silicon diode. Approximate design equations are as follows.

$$I_{cf} = \frac{V_{D1} - V_{be}}{R_E}$$

$$R_B = \frac{V_{s(min)} H_{FE(min)}}{I_{cf}}$$

$$I_{C(max)} \geqslant I_{cf}$$

$$P_{C(max)} \geqslant V_{s(max)} I_{cf}$$

$$V_{CEO} \geqslant V_{s(max)}$$

where:

I_{cf} = output cutoff current.
V_{D1} = forward voltage drop of D_1.
V_{be} = forward base-emitter drop of T_1.
$V_{s(min)}$ = minimum supply voltage.
$Vs_{(max)}$ = maximum supply voltage.

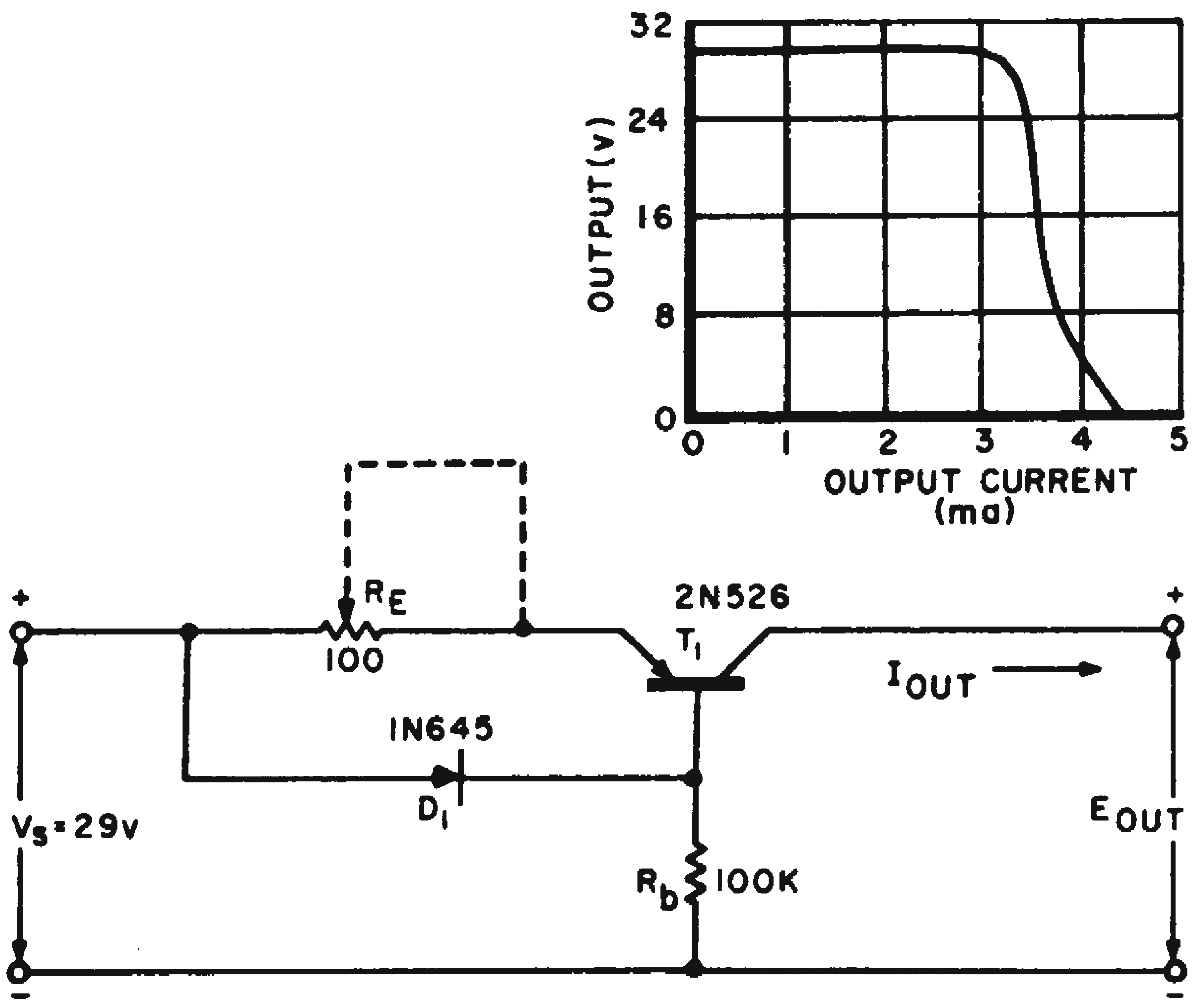

Limiter circuit and output characteristics using components and values as shown.

If a potentiometer is used for R_E, a continuously variable cutoff current will be available. By connecting an ammeter across the output and applying an input voltage, R_E can be calibrated directly in μa, ma, or amperes.

The lower limit on cutoff current is the I_{CBO} of the transistor used. The output impedance of the circuit before cutoff is equal to $R_E + R_{sat}$ where R_{sat} is the saturation impedance of T_1.

This circuit also makes a handy current source for one-shot timing applications and other uses.

Donald A. Boelter, associate engineer, Martin-Marietta Corp., Baltimore 20, Md.

Pentode Replaces Triode For Current-Limiting in Tube Supply

Current-limiting is a rather common feature of transistorized laboratory power supplies. But it is rather difficult to achieve in a series-regulated vacuum tube supply. This is because it is difficult to sense load current, necessary to bring about current limiting, in this type of supply.

But if a pentode instead of the usual triode is used as the series tube, the problem becomes very simple. Plate current in a pentode depends primarily upon control grid voltage. Even if the plate voltage should increase greatly, the plate current rises very little. If the control grid is clamped with a diode so grid bias cannot be reduced beyond a set value, the tube automatically will go into current limiting.

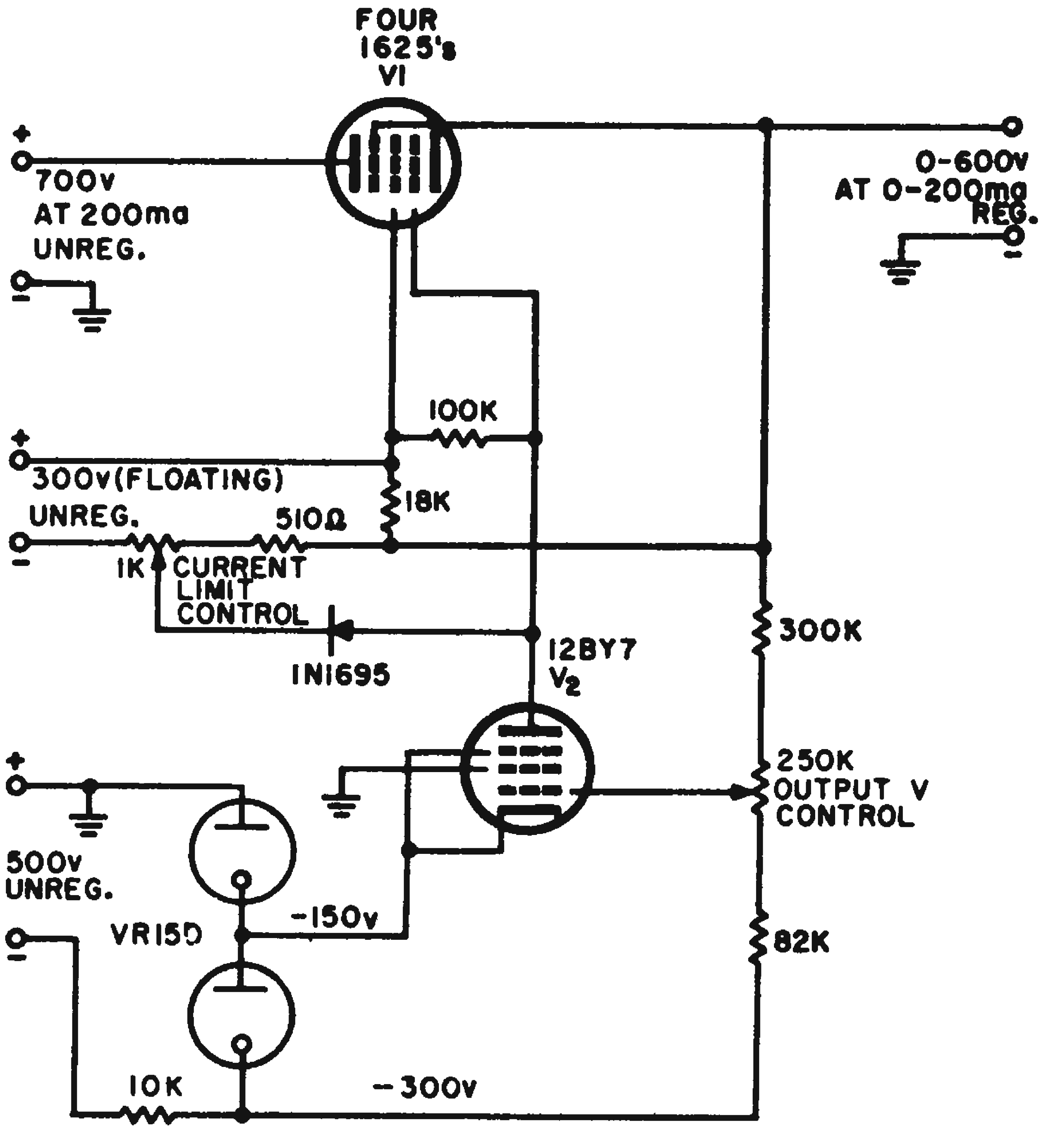

Current-limiting is introduced in vacuum tube supply by using a pentode instead of the usual triode series tube. The control grid of the pentode is clamped with a diode so that its bias is held above a minimum value.

Such a supply was built using transmitting pentodes for the series tubes to permit high plate dissipation. Low resistances were used in series with the control grid and the screen grid leads of each tube for parasitic suppression. They also were placed in the cathode of each tube for current equalization.

In the circuit shown in the figure, as load current increases, the output voltage drops slightly. V_2 senses this drop and counteracts it by raising the voltage applied to the grid of V_1. This is the normal operation of a voltage regulator.

However, when load current reaches the current limit value, the grid of V_1 is stopped from going higher by the conduction of the silicon diode. This clamps the grid-to-cathode voltage of V_1 to a preset bias, and current limiting begins.

Herbert Zimmerman, development engineer, Wilcox Electric Co., Kansas City, 27, Mo.

Standby Batteries Protect Supply Against AC Power Loss

We had to design a power supply that could "ride out" a loss of ac power. The simplified circuit shown in the figure served us perfectly.

Zener diode CR_2 and resistor R_2 form a simple shunt regulator. With line voltage applied, the rectifier supplies regulator current and holds transistor Q_1 cut-off through the base-biasing network of R_4, R_5, R_6, and CR_3. Decreasing line voltage drops the base potential and the transistor begins to conduct. Thus, the batteries, through R_3, furnish the regulator current which would normally be lost on reduced input voltage.

When a total loss of ac voltage occurs, the transistor saturates and the batteries carry the entire load. CR_1 and R_1 form a charging network that keeps the batteries charged as long as line voltage is available.

In our system the dc voltage output varies less than 0.2 per cent over the range of 0-130 v rms input.

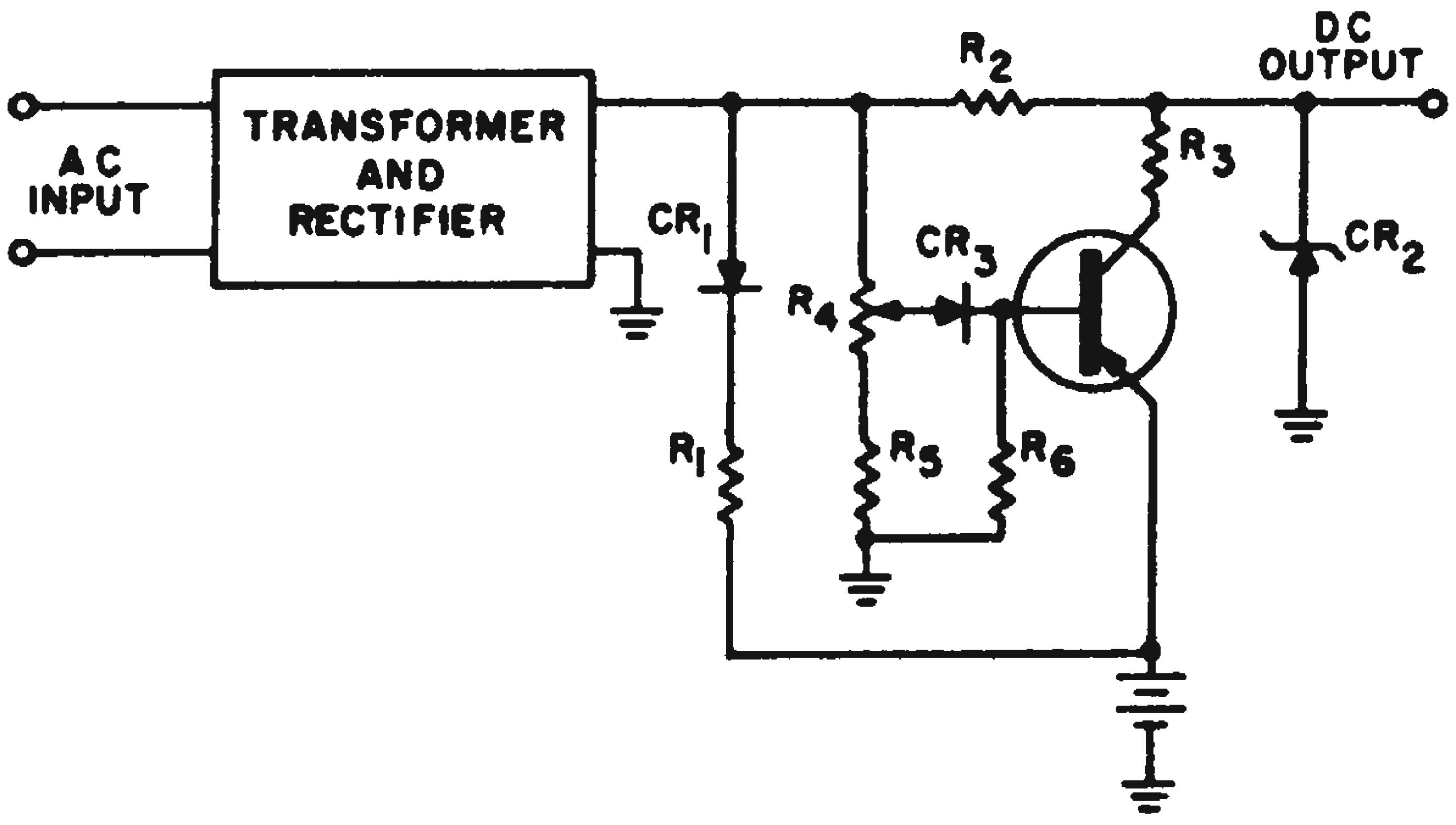

When a total loss of ac input voltage occurs, the transistor saturates and the standby batteries carry the entire load.

G. Douglas McKinley, development engineer, Forney Engineering Co., Dallas, Tex.

Transient Clipper For DC Converters

In a dc converter, as shown, each transistor is ideally subjected to twice the supply voltage V_{CC} when in the OFF condition. For example, if Q_1 is conducting, the induced voltage across N_2 will be equal to V_{CC} and will add to the supply voltage so that $V_{CE2} = -2V_{CC}$.

However, due to leakage inductance in the power transformer, this situation is not always realized. When the transistor switches off, the sudden change in current through any leakage inductance in the collector circuit will result in a high voltage spike appearing from collector to emitter on the OFF transistor. This spike may be several times the supply voltage and may exceed the voltage breakdown rating of the transistors.

The method suggested here suppresses these transients. Assume Q_1 is conducting and Q_2 is off. Voltage V_{CE2} will be equal to the supply voltage plus any voltage that is induced in N_2. Zener diode D_3 is chosen to have a breakdown slightly above the supply voltage. When V_{N2} tends to exceed V_Z, the Zener diode breaks down causing a current I_2 to flow as shown. This results in V_{N2} being clamped at approximately V_Z, thereby maintaining V_{CE} at a level within the transistor rating. Transistor Q_1 is protected in a like manner against voltage spikes in N_1 through current path I_1. Diodes D_1 and D_2 prevent a reverse flow of currents I_1 and I_2, which would otherwise short the windings N_1 and N_2, and the applied voltage V_{CC} alternately appears across them.

This system offers an advantage of lower cost over systems where two Zener diodes are used. Another advantage is better control over clipping level. Since Zener tolerance is based on a percentage of voltage rating, closer clipping can be achieved here as tolerance is a percentage of V_{CC} and not $2V_{CC}$.

A small capacitor may be placed across D_3 to help clip the leading edge of very fast rising voltage transients. It is generally not required that diodes D_1 and D_2 have fast recovery times since the transient voltage in this type of circuit lasts for only a small percentage of the period of oscillation. Typical circuit components are shown in Fig. 2a.

Paul Vergez, Transistor Products Div., Texas Instruments Inc., Dallas, Tex.

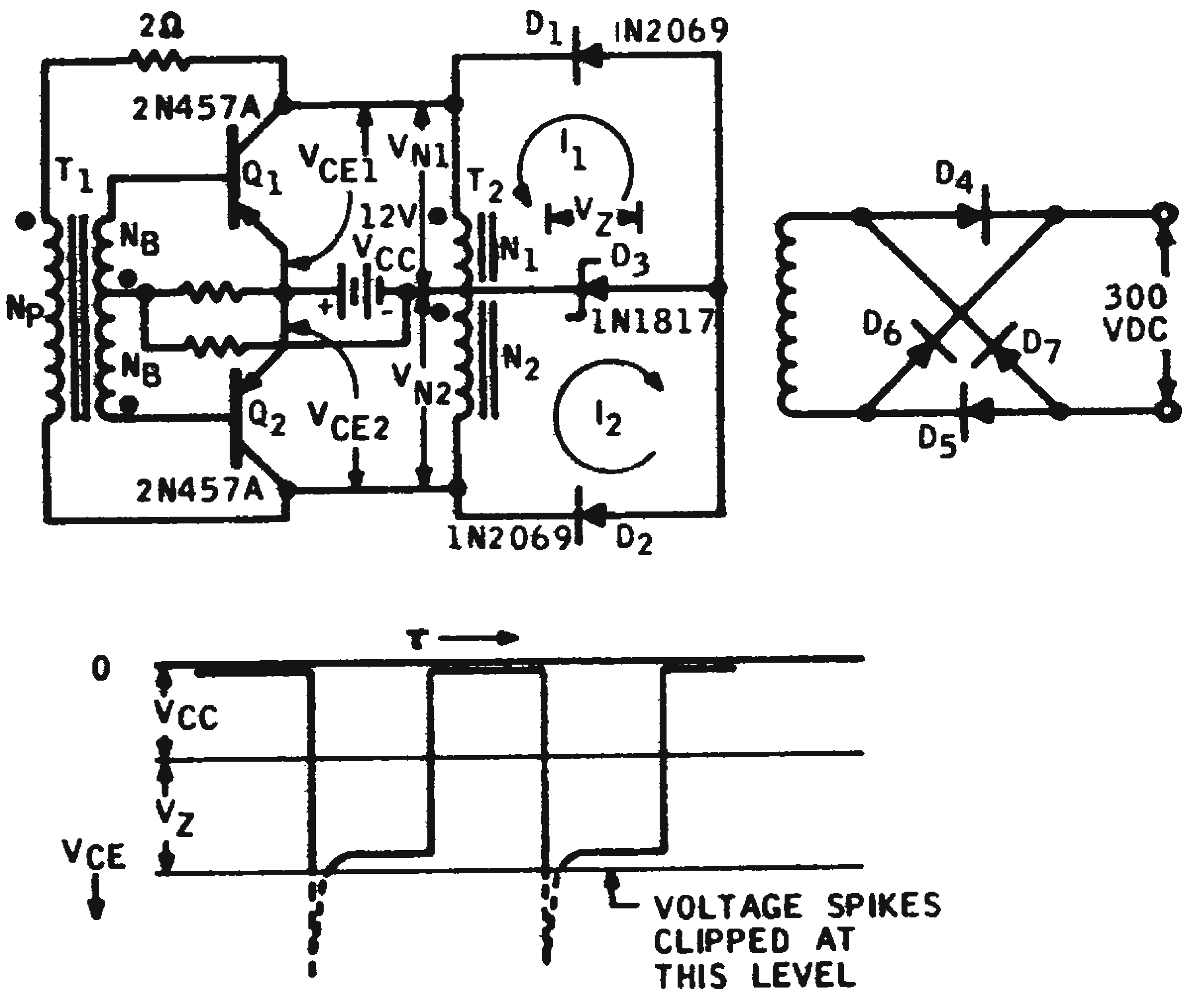

Single Zener clipping diode removes waveform spikes.

Voltage, Current Limiter Protects Circuitry From Shorts and Overs

Laboratory breadboards can be protected from shorts and over-voltages by connecting the circuit shown in the figure across the output of the power source. The circuit is quite useful when transistorized circuitry, easily damaged by high voltages or currents, is being tested. Because it is designed to have adjustable limit settings,

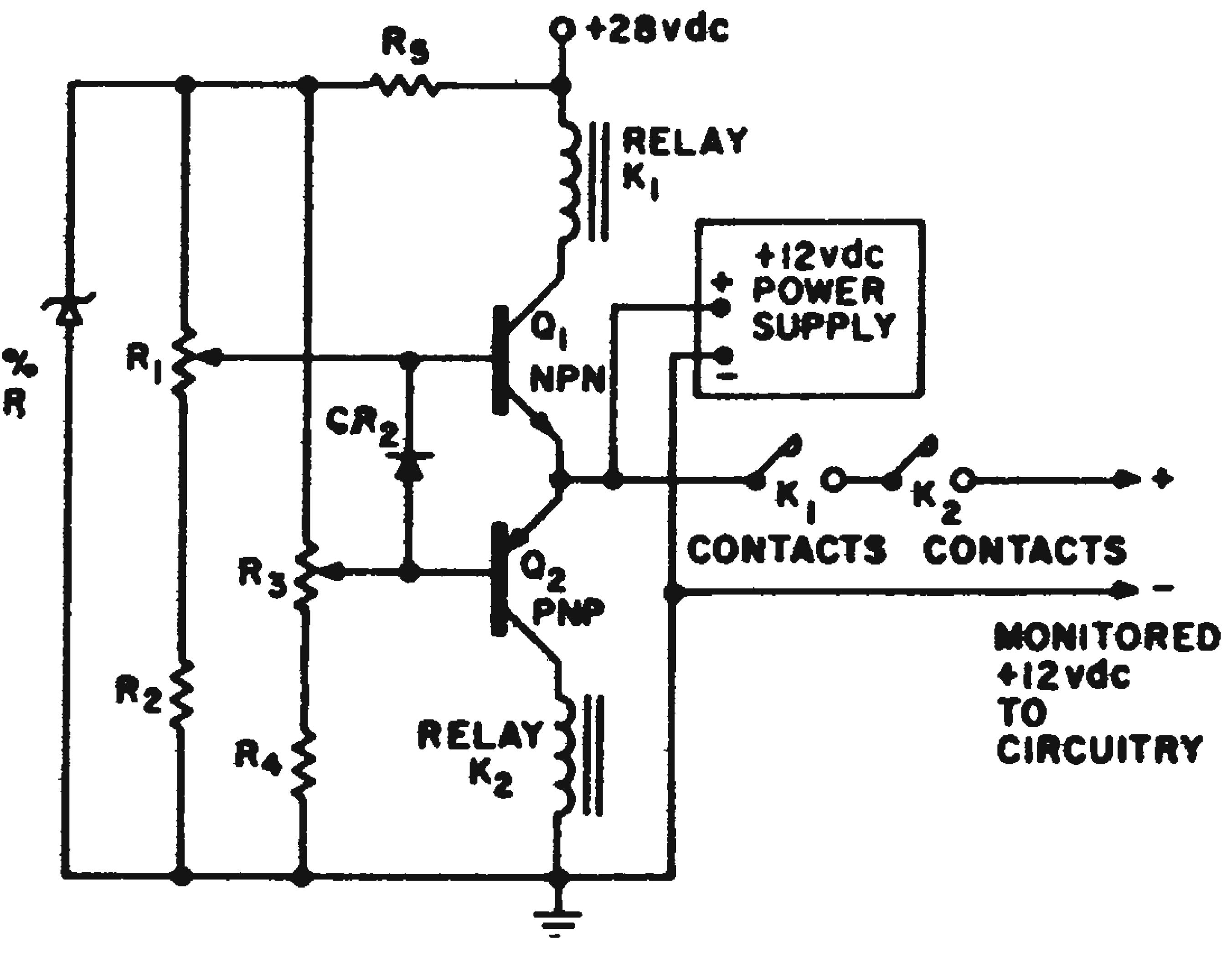

Circuit connected across power supply outputs removes power to test circuitry if shorts or over-voltages occur.

the circuit can be used for different applications.

In normal operation, transistors Q_1 and Q_2 are conducting and relays K_1 and K_2 are energized. The relay contacts are closed and the load will receive +12 v dc. Tolerances around +12 v are set by potentiometers R_1 and R_3. R_1 is set for the high voltage limit and R_3 for the low voltage (short circuit) limit.

If the power supply should suddenly produce an over-voltage, transistor Q_1 will be turned off, de-energizing relay K_1 and opening the K_1 contacts. If the load should suddenly short, transistor Q_2 will be turned off, de-energizing relay K_2 and opening the K_2 contacts.

Resistors R_2 and R_4 prevent overdriving Q_1 and Q_2; CR_2 prevents reverse-biasing the transistors more than about 1 v. Zener diode CR_1 provides a stable reference voltage.

For fast operation, relays K_1 and K_2 should be mercury-wetted contact relays similar to the C. P. Clare HGS series. These relays permit 2 msec drop-out times that are compatible with transistor thermal time-constants. With the Clare relays and military components, the MTBF of the circuit is about 12,000 hours.

Cecil R. Frost, senior project engineer, Canoga Electronics Corp., Van Nuys, Calif.

Battery Boost Circuit Uses Autotransformer Action

The circuit of Fig. 1 was designed to boost 6-v battery voltage to 12 v at about 5-w output. Since no secondary winding is used and the collectors are grounded, the circuit is very simple and can be constructed in a very small space. An efficiency of 90 per cent is obtained because the dc-to-dc converter is essentially in series with the battery. Battery voltage appears at the output even when the converter is disabled.

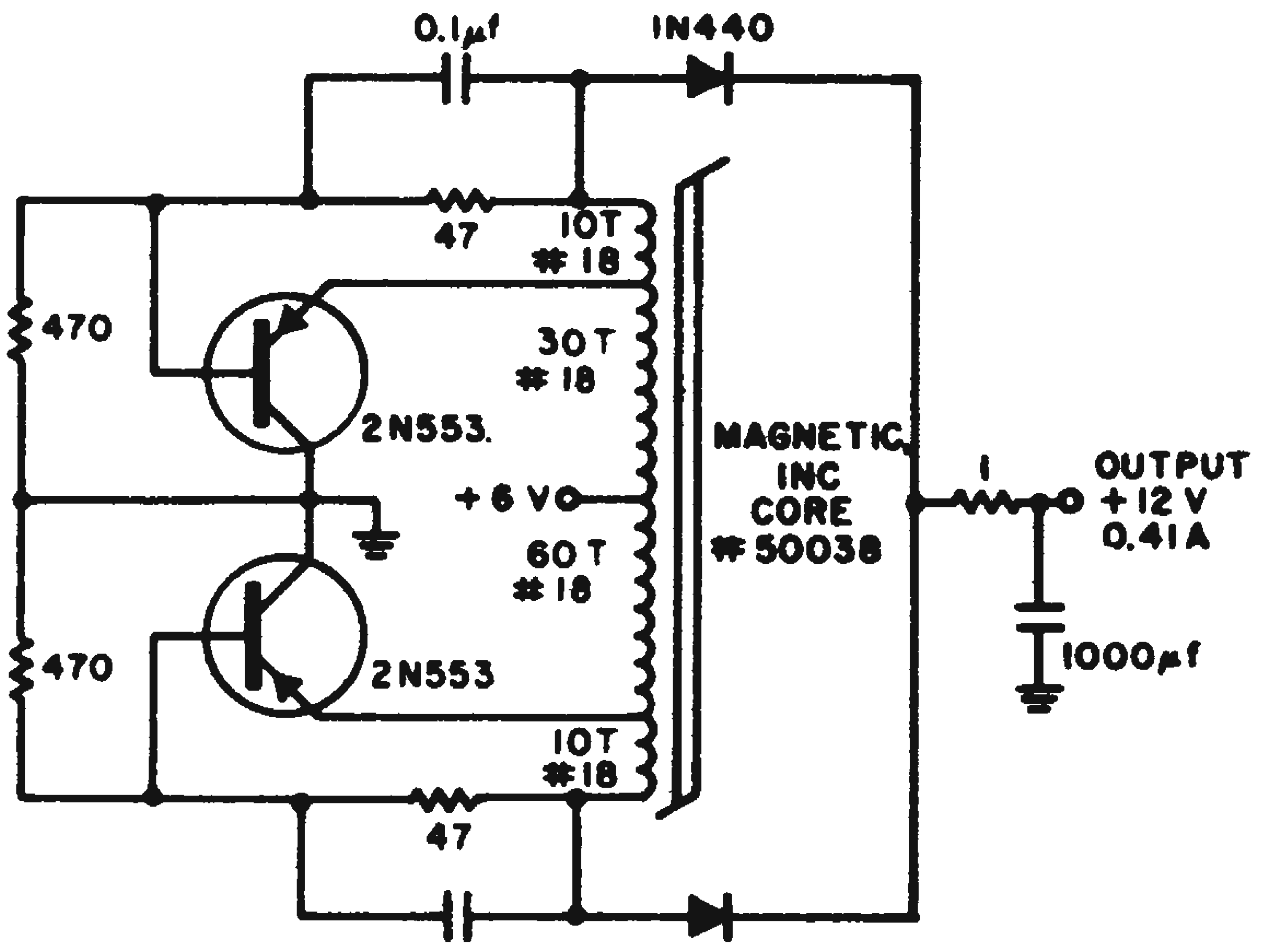

Fig. 1. High efficiency is obtained in battery boost circuit by permitting batttery to supply half of the voltage directly.

The circuit has been used in a 6-v automobile to power a 12-v radio. The circuit of Fig. 2 provides higher power to operate a 24-v image-orthicon television camera on a 12-v battery. Output is 90 w. The efficiency is slightly less than 90 per cent due to the IR losses at this power level. The base-driving windings cannot be used for output because the waveform would be too distorted. Separate windings make up for IR drops in the primary circuits.

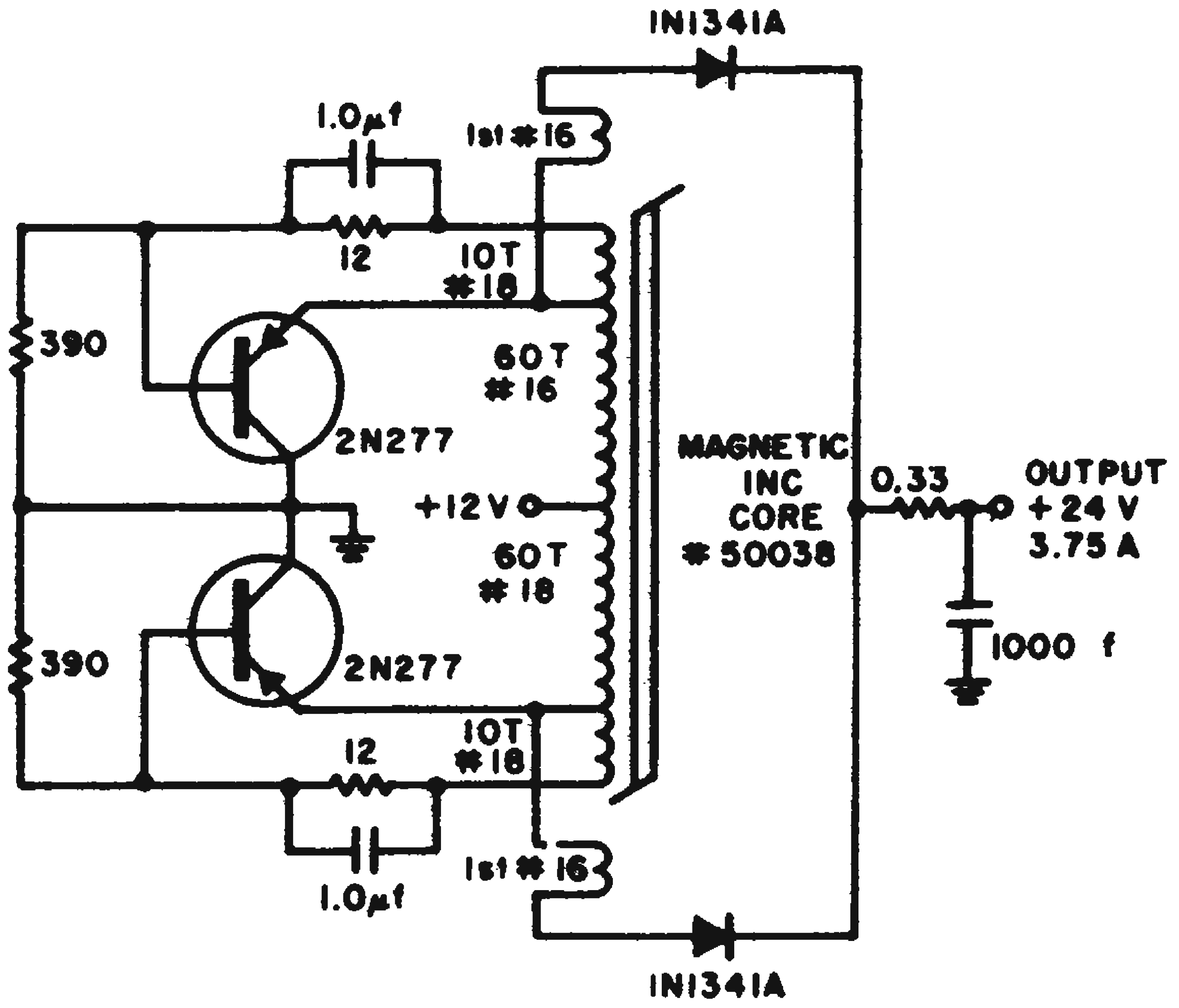

Fig. 2. High power boost circuit uses separate base drive winding to avoid IR drop in primary.

Howard F. Stearns, project engineer, General Electric Co., Syracuse, N. Y.

Battery Charger Protects Small Nickel-Cadmium Cells

Maintaining a full charge on nickel-cadmium rechargeable batteries requires a charger that will deliver the required current but will cut off at the maximum charge voltage. The recommended charge rate for these batteries is 120 ma for 14 hours with a maximum charge voltage of 1.5 volts per cell. These requirements can be met for a three-cell battery by using a constant current source to maintain the 120-ma level, and a simple series voltage regulator to hold the voltage limit of 4.5 v. Thus even a fully discharged cell will be protected since the recommended charge rate cannot be exceeded and three is no danger of overcharge.

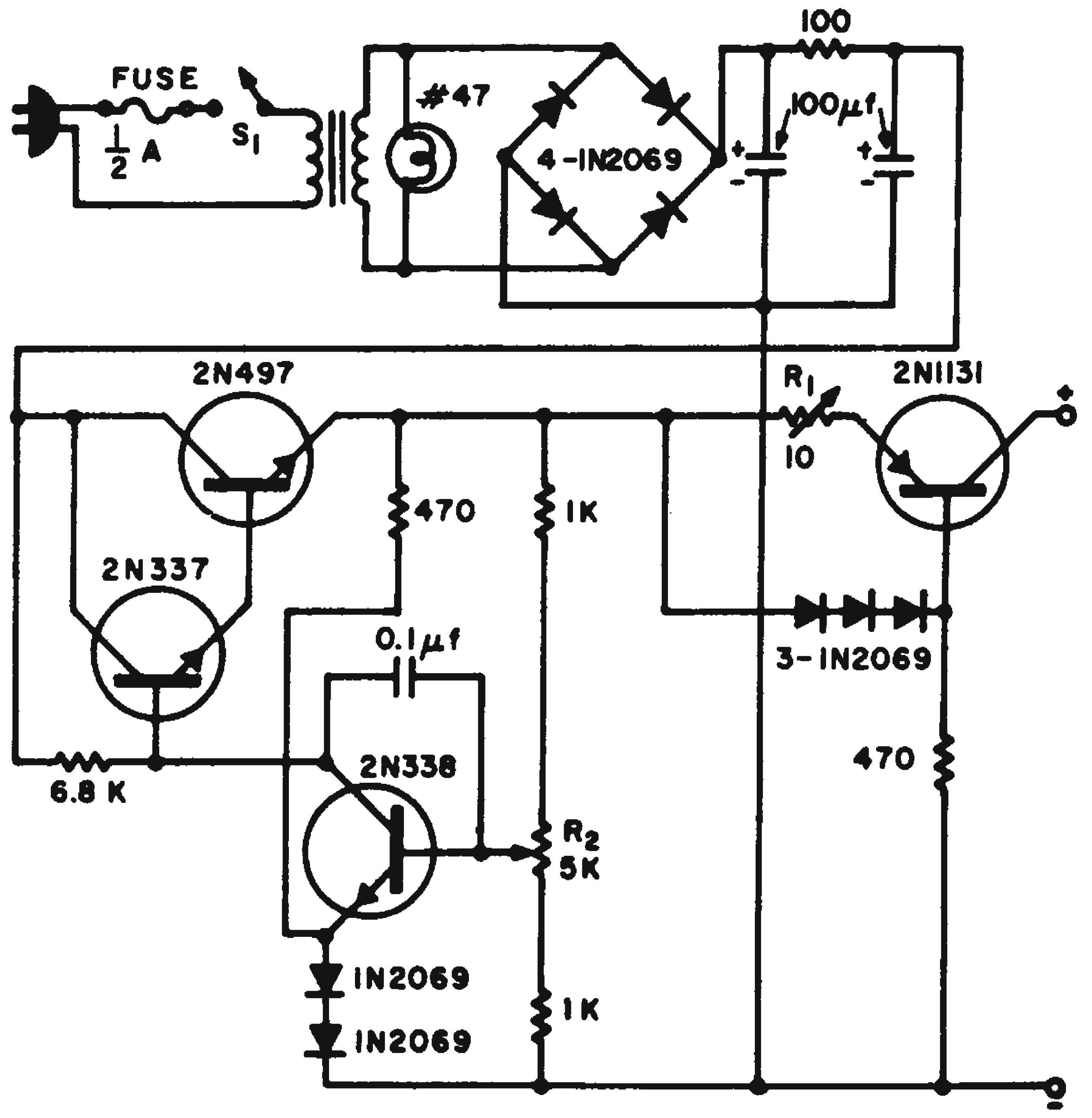

Current and voltage regulation protect small cells from damage from high charge rate.

To calibrate for maximum current, the output is shorted through an appropriate current range using a VOM and R_1 is set for the desired current. To set maximum output voltage, the voltmeter is set across the output terminals and R_2 is adjusted for the desired open circuit voltage. There is some interaction between R_1 and R_2 so the adjustment procedure should be carried through several times.

Ronald M. Mann, engineer, Texas Instruments Inc., Dallas, Tex.

Dual-Voltage Power Supply Uses Dual-Purpose Transistors

Combination 12-v dc and 117-v ac power supplies frequently employ a 60-cps power transformer, which becomes the switching transformer when operated from the dc source.

Design of a supply for a 20-w am transceiver was complicated by the fact that the receiver and class-B audio circuitry was transistorized. In addition to the high voltage for the transmitting tubes, the supply was required to deliver a "stiff" source of 12-v dc when operating from 117 v ac. The load imposed by the class-B stage varied between 0.1 and 2.0 amp. Cost considerations ruled out the use of a Zener regulated supply.

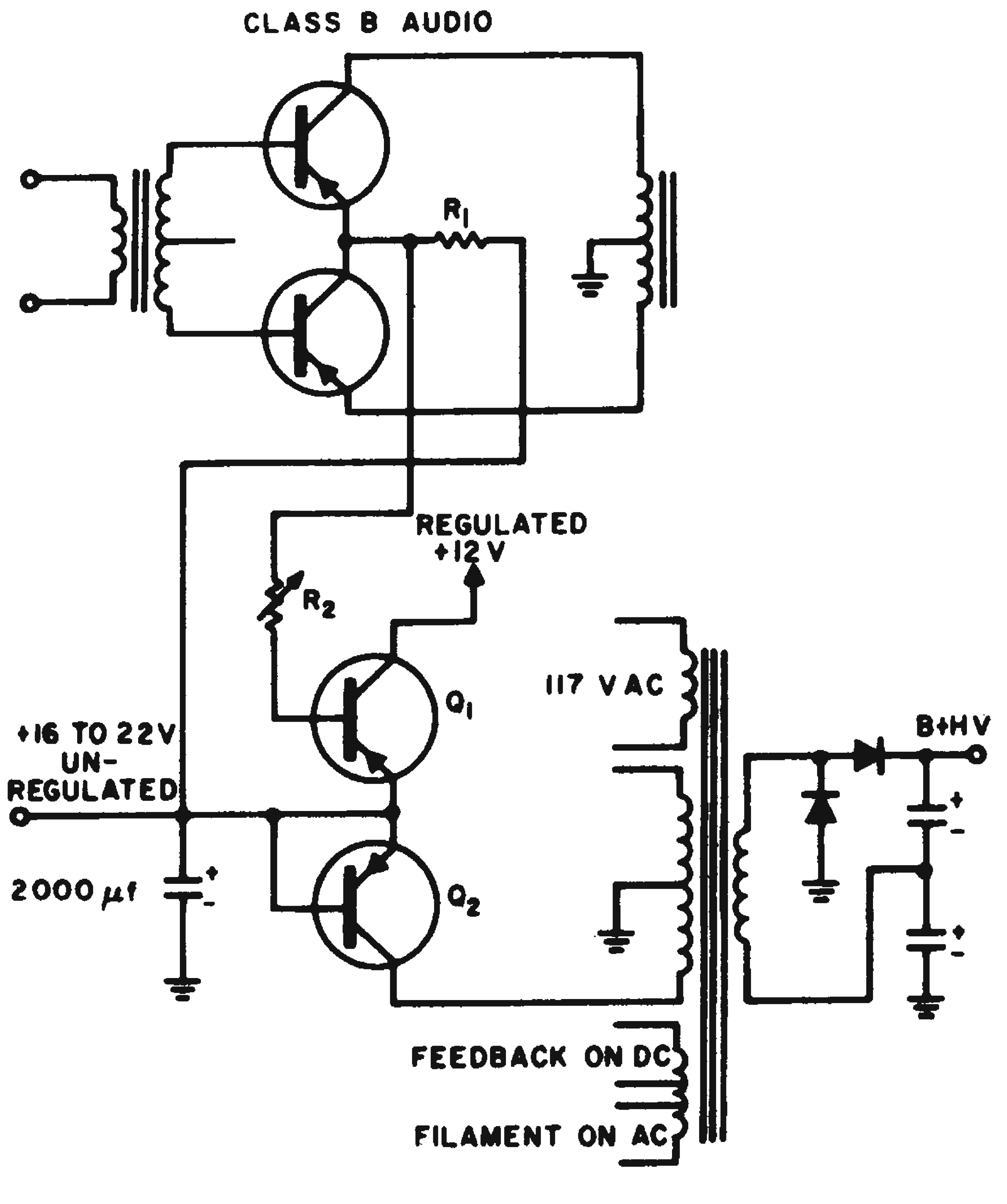

Switching transistors for 12-v operation are used as rectifier and regulator for 117-v operation.

The problem was solved at minimum cost using the circuit shown in the accompanying schematic. Power supply connections are shown for operation from 117 v. Switch transistor Q_2 is connected as a half-wave rectifier. The capacitor in the emitter circuit charges to the sine peak of approximately 22

v. This is applied to the class-B audio and although it drops to about 16 v under load, audio distortion is quite acceptable.

Increasing class-B stage current also causes a voltage increase across R_1. This voltage is applied to the base of switch transistor Q_1, which now operates as a regulator. By proper selection of R_1, R_2, and transistor characteristics, the regulated voltage will remain constant within 5.0 v. This slight variation has no affect on the frequency-determining oscillators or on over-all gain.

When operated from a dc source, the collector of Q_1 is connected to the upper half of the switch winding and the bases are returned to the feedback winding, to make a conventional power converter configuration.

Donald L. Stoner, Stoner Electronics, Alta Loma, Calif.

Overload Protector Dissipates Little Power

Most power-supply protection circuits have the disadvantages of dissipating excessive power during overload or short-circuit conditions. Also, fuses must be reset or replaced to restore normal operation. A circuit that eliminates these disadvantages is shown at *a*.

Upon application of an input voltage, Q_4 and Q_5 conduct and power is applied to the load. Transistor Q_5 is biased to saturation to keep losses at a minimum. Resistor R_1, the overload sensing element, acts as a low-resistance current shunt across the emitter-base junction of Q_1. The value of R_1 determines the load current cut-off point and must be selected in conjuction with other circuit parameters.

At the cut-off point, Q_1 and Q_2 are biased sufficiently into conduction to allow the voltage drop across R_2 to trigger the circuit. This biases Q_3 and Q_4 off. With Q_4 off, the bias is removed from Q_5 and the output goes to zero, except for leakage current through Q_5.

The trigger voltage developed across R_2 charges C_2 through CR_1. This charge will hold the output off for several hundred milliseconds. When C_2 discharges through Q_3, the circuit automatically resets and Q_4 again conducts. As Q_5 is also biased into conduction, a voltage is again applied to the load or short circuit.

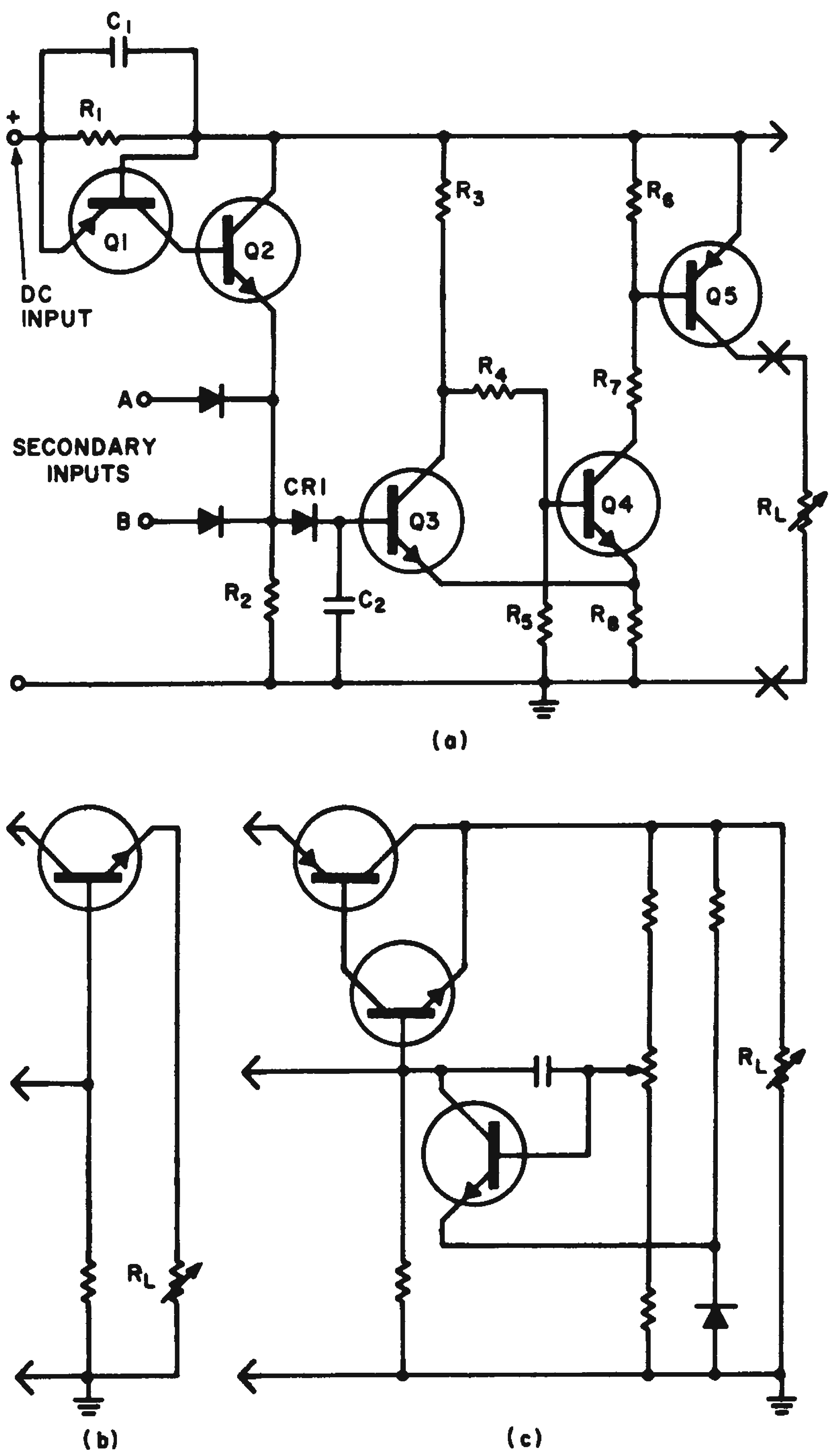

Automatic protection circuit (a) does not consume power during short or overload. Added power transistor (b) and dc regulator (c) extend usefulness of circuit.

If R_L is still less than the cut-off value, a current pulse of safe amplitude will be delivered to the load and the circuit will cut off again within microseconds. In this manner, short circuits or overloads can be sustained indefinitely with little loss.

Near the cut-off point, the off time is somewhat dependent upon R_L, since cut-off occurs before C_2 can be fully charged. Under this condition the on-off time is variable and random and the average load current may be any fraction of the cut-off current. To reduce the range of R_L when this condition occurs, transistor Q_2 was added. It may be omitted if sharp cut-off is not required. Capacitor C_1 is required on a noisy line to prevent random triggering of the circuit.

Where load currents of several amperes are needed, the addition of a power transistor, as shown in *b*, will provide the required higher current protection and consume little power. The protection circuit may be combined with a dc regulator circuit as shown in *c*.

Another feature of this technique is the circuit's ability to be triggered by secondary inputs. These inputs may be from circuit points in equipment operated by the dc system. Thus, protection can be obtained at remote points even though the overload at these points is not sufficient to affect the dc line current.

O. W. Craig, engineering supervisor, Sperry Farragut Co., Bristol, Tenn.

Universal Regulator Adapts to Power-Supply Needs

With only four changes of component values, the power-supply regulator shown here can be used with voltages from 12 to 250 volts, and at currents up to 5 amps. Regulation will be better than 0.5 per cent over the temperature range of −30 to +70 C.

A differential amplifier, consisting of Q_6 and Q_7, compares the output to CR_6 as a voltage reference. The difference is used to drive emitter follower Q_5. The output from this emitter follower is coupled to shunt transistor Q_4. A Zener diode in the collector circuit prevents damage from overvoltage. The shunt transistor drives the two amplifiers, Q_2 and Q_3, in the base circuit of series regulator Q_1. A thermistor connected from base to emitter of Q_1 provides thermal stability and diodes CR_3, CR_4 and CR_5 are used for thermal compensation of the differential amplifier.

The following equations can be used to compute the required values of CR_1, R_{15}, R_{16} and CR_8 for different output voltages:

$$CR_1 \text{ (current rating)} = \frac{3 \text{ x (Output current)}}{2}$$

$$R_{15} \text{ (ohms)} = \text{(Output voltage } -10) \text{ x } 50$$

$$R_{16} \text{ (ohms)} = \text{(Output voltage } -5) \text{ x } 1000$$

$$CR_8 \text{ (voltage rating)} = \frac{5 \text{ x (Output voltage)}}{6}$$

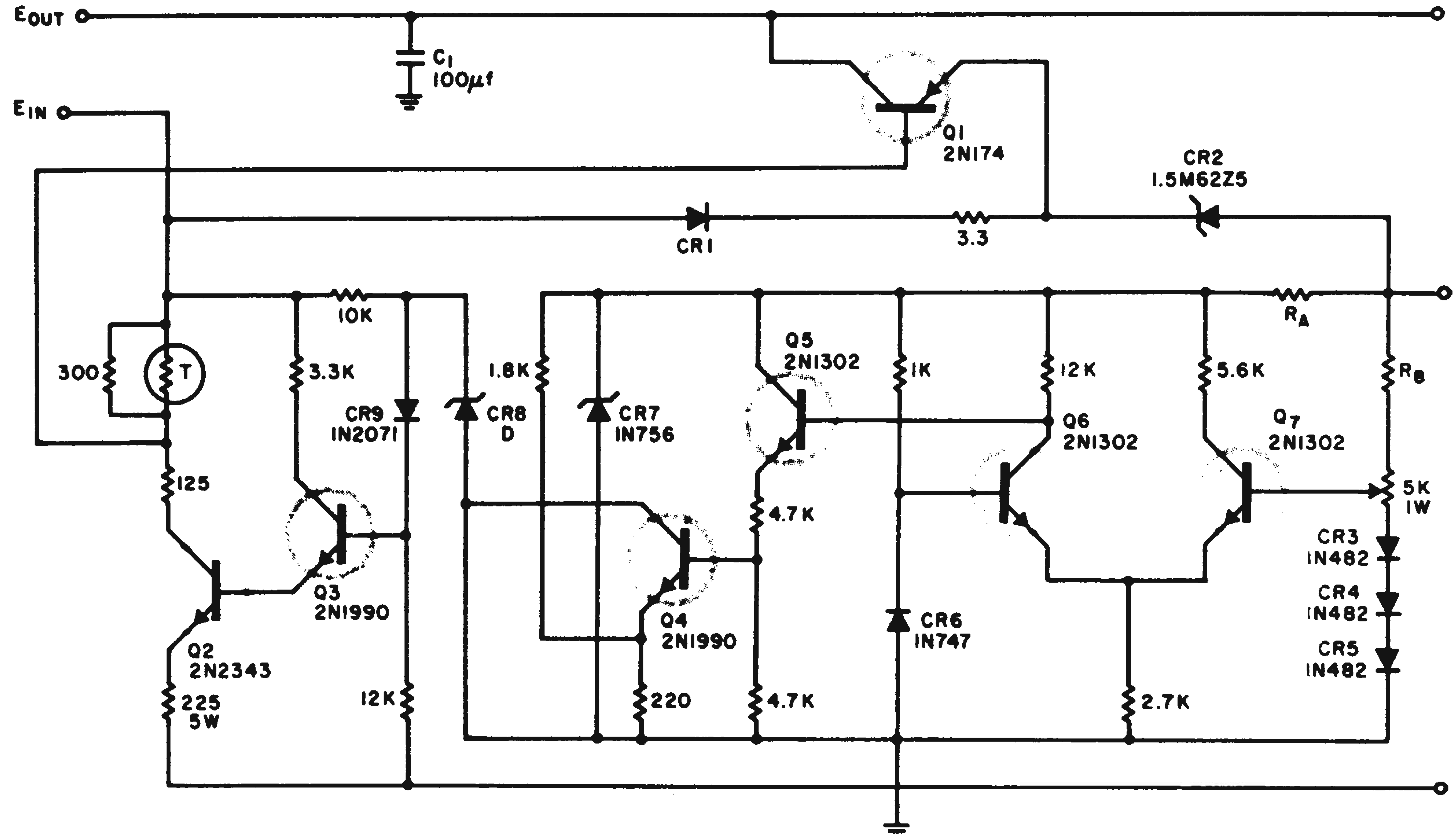

By changing values of four components, regulation can be used over a range from 12 to 250 volts.

By applying the above equations, this regulator can be used for output voltages up to 250 v. For voltages below 40 v, Zener diode CR_3 may be short-circuited.

George P. Cenci, design engineer, Edgerton, Germeshausen and Grier, Inc., Boston, Mass.

Tapped-Primary Transformer Doubles As Autotransformer

A power transformer with one or more primary taps may be used as an autotransformer to either raise or lower the voltage delivered to the load.

The transformer shown in the diagram is a typical example. It has four taps, labeled 105, 110, 115 and 120 volts. By means of a two-deck, seven-position wafer switch, wired as indicated, it will provide a voltage range of 90 to 120 volts adjustable in 5-volt steps. This assumes a line voltage of 105 volts. The actual voltage delivered to the load at each switch position, will, of course, depend upon the actual line voltage. Only the primary winding is used for this application.

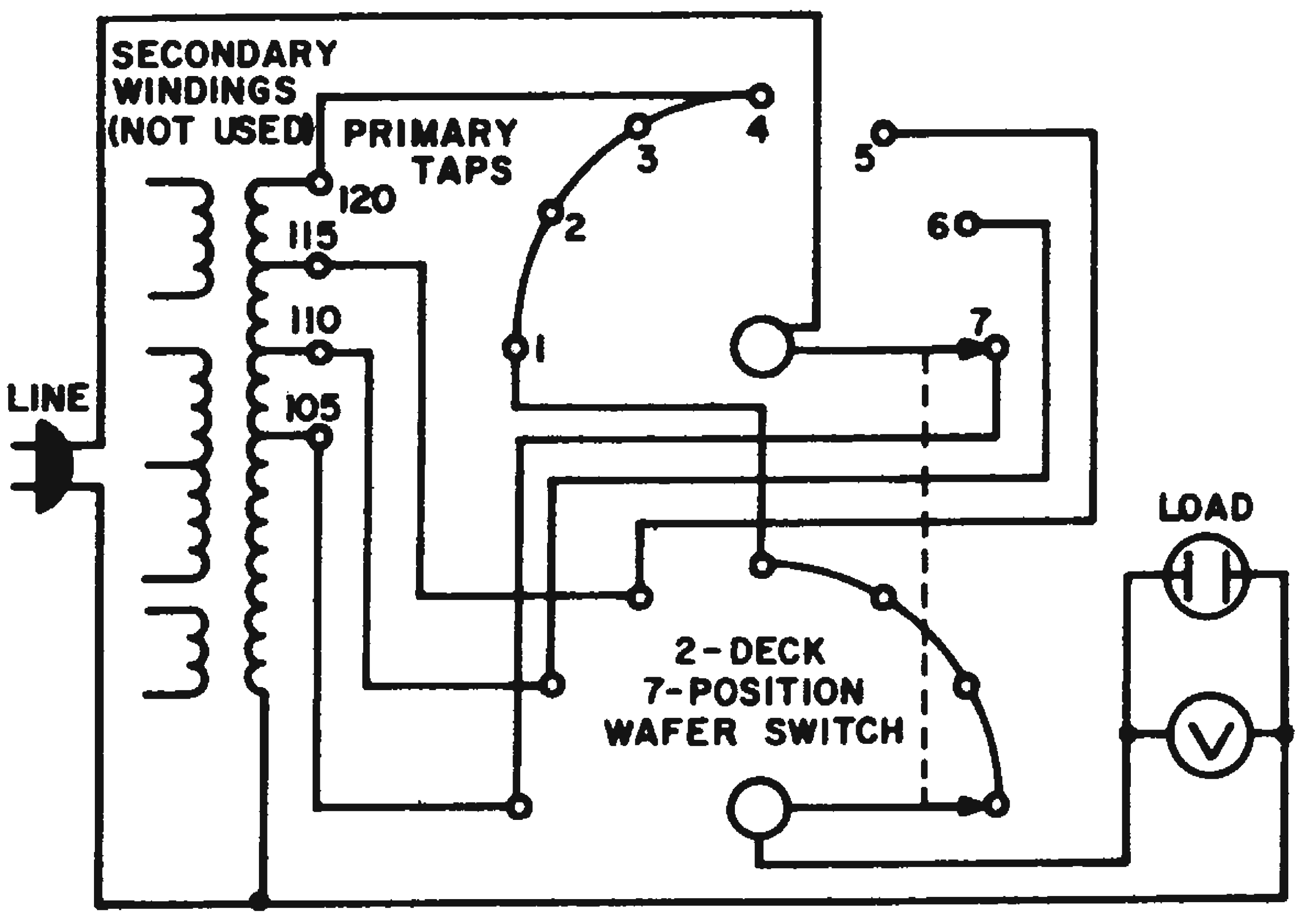

With 105-volt line, switch positions cover range from 90 to 120 volts in 5-volt steps.

Joseph Leeb, electrical engineer, International Telephone and Telegraph Corp., Paramus, N. J.

Current Limiter Protects Magnetic Amplifier Supply

Magnetic amplifiers are often used as the regulating element in dc power supplies to obtain high efficiency. However, if automatic overload-current limiting is required, some auxiliary limiting element is needed because of insufficient range in the magnetic amplifier. One method for accomplishing this is the circuit shown in Fig. 1.

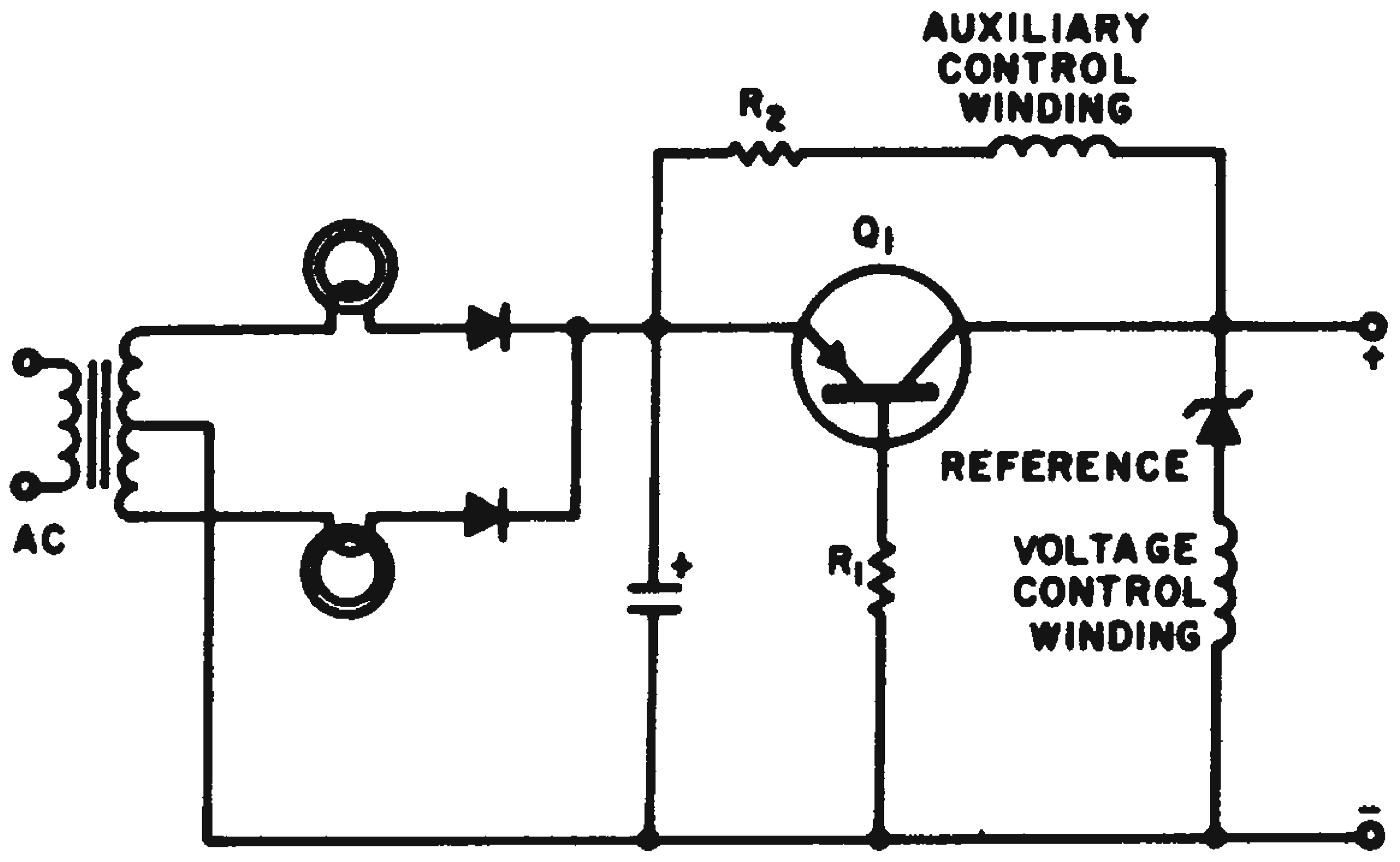

Fig. 1. Saturated transistor provides overload protection for magnetic amplifier power supply.

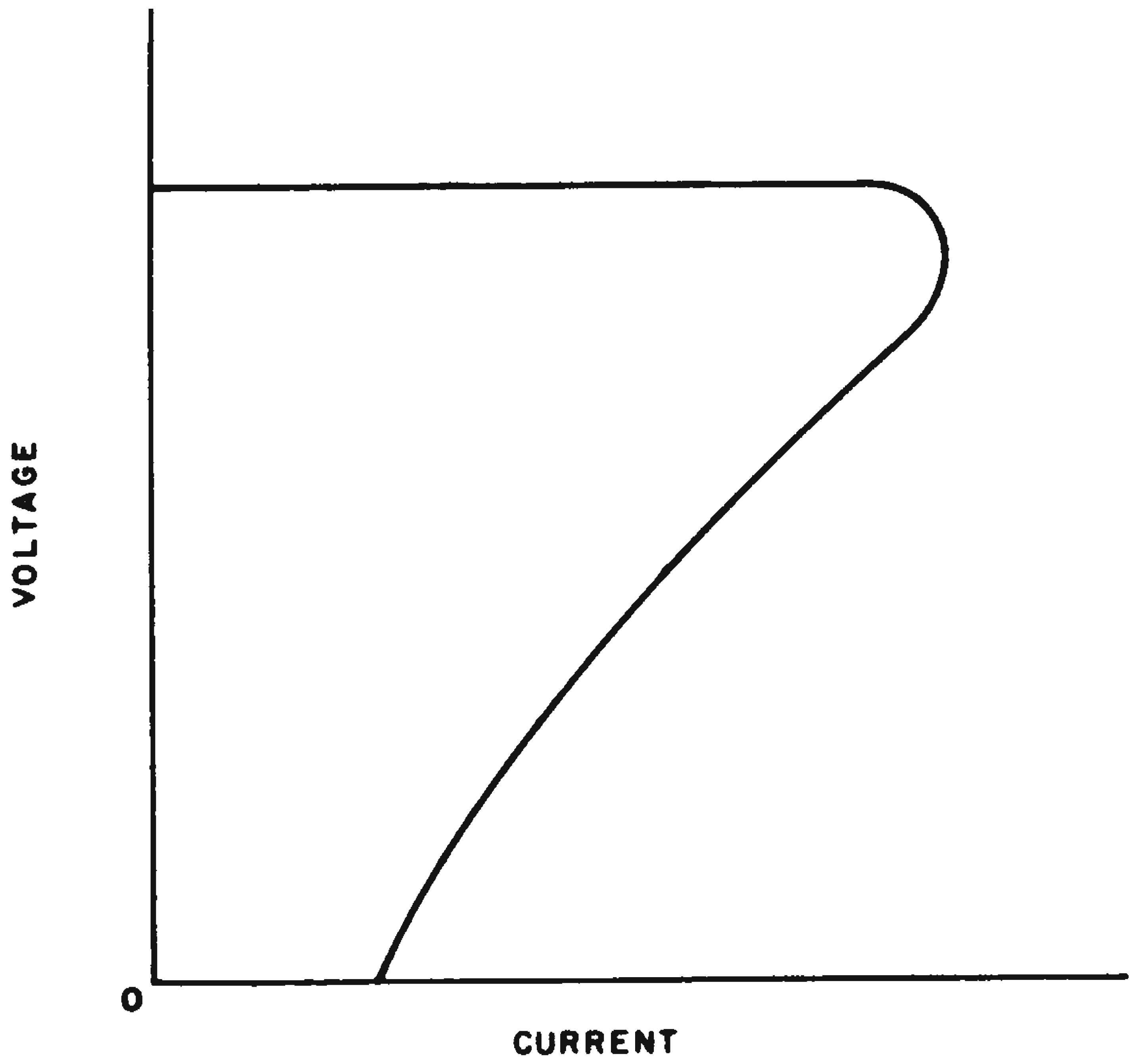

Fig. 2. Characteristic curve for power-supply output shows effect of overload.

During normal operation, power transistor Q_1 is maintained in saturation by base current drawn through resistor R_1. When overload occurs, Q_1 comes out of saturation. The voltage developed across Q_1 is applied to an auxiliary control winding of the magnetic amplifier through resistor R_2. This causes the magnetic amplifier to turn off, and limits the dissipation in Q_1. Regeneration occurs, and the short circuit current is limited to a low value.

Voltage is regulated by a Zener diode and magnetic-amplifier control winding connected acorss the output. The voltage-current characteristic is shown in Fig. 2.

Stewart T. Coffin, head of engineering, Dynamic Controls Co., Cambridge, Mass.

Series-Shunt Regulated Supply Improves Transient Regulation

Load transients that force current back into a series-regulated power supply will cause the series regulating transistor to cut off. The supply voltage will then rise to the limits determined by the transient or by the breakdown voltage of the circuit components. The conventional approach to this problem is to add fixed resistive loading to the supply which will draw a current higher than the maximum expected transient. This approach is frequently wasteful in over-all power consumption and requires an increase in the power ratings and loop gain of the power supply.

The circuit diagram shows a simple series-regulated power supply to which a single transistor Q_3 has been added to give shunt regulation for reverse current transients and thus overcome the problems previously mentioned. In normal operation the base-emitter of the series regulating transistor Q_1 is forward-biased and hence Q_3 is cut off. If a transient occurs that tends to force current back into the supply, the voltage at the output will increase, and the collector current of the regulating transistor will also increase. This will cause Q_1 to cut off and Q_3 to conduct, thus shunting the current to the negative bus. The supply will function as a shunt regulator as long as the reverse current flows and will then revert to the normal series operation.

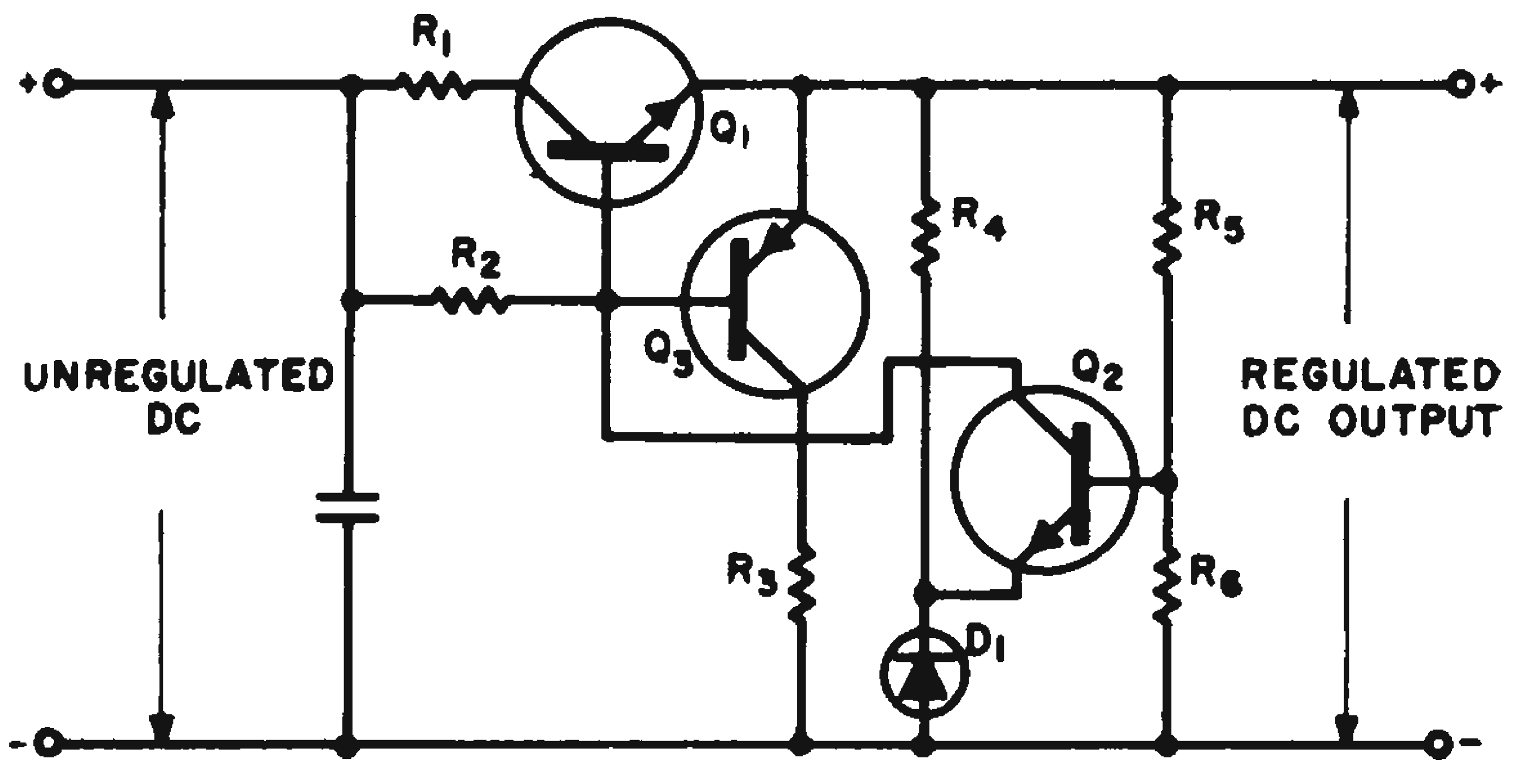

Shunt regulator added to series type gives protection against reverse current transients.

T. P. Sylvan, engineer, General Electric Co., Syracuse, N .Y.

Low-Cost SCR Multivibrator Yields 20 Kv from 20-V Input

Two SCRs used as a multivibrator can generate a voltage great enough to start an arc lamp with a 2-cm gap. Total current required is only 5 amp. The rapid turn-off time of Q_1 provides the necessary inductive kick to the primary of L_1. Using a 200-to-1 turns-ratio transformer with a primary dc resistance of 1 ohm or less, the secondary winding easily develops voltages of 20 Kv.

Two types of transformers were tried in the circuit. The first, a compact high-voltage type was relatively expensive compared to the total circuit cost. The second, a standard automotive ignition coil was modified to the 200-to-1 ratio requirement and worked equally well.

The less than 10 per cent duty cycle of Q_1 would allow the use of less expensive SCRs than those shown.

The multivibrator depends on the RC time difference of R_1C_1 to R_4C_3. R_1C_1 being much shorter, Q_1 turns on first placing Q_1 anode and C_2 close to ground potential. C_2 charges to E_{bb} less the forward drop across Q_1. At R_4C_3 time Q_2 fires, placing Q_1 anode negative, instantaneously, with respect to ground through C_2. This turns off Q_1. The cycle is then repeated with the firing of Q_1.

Diodes D_1 and D_2 discharge C_1 and C_3 respectively during the on time of each SCR.

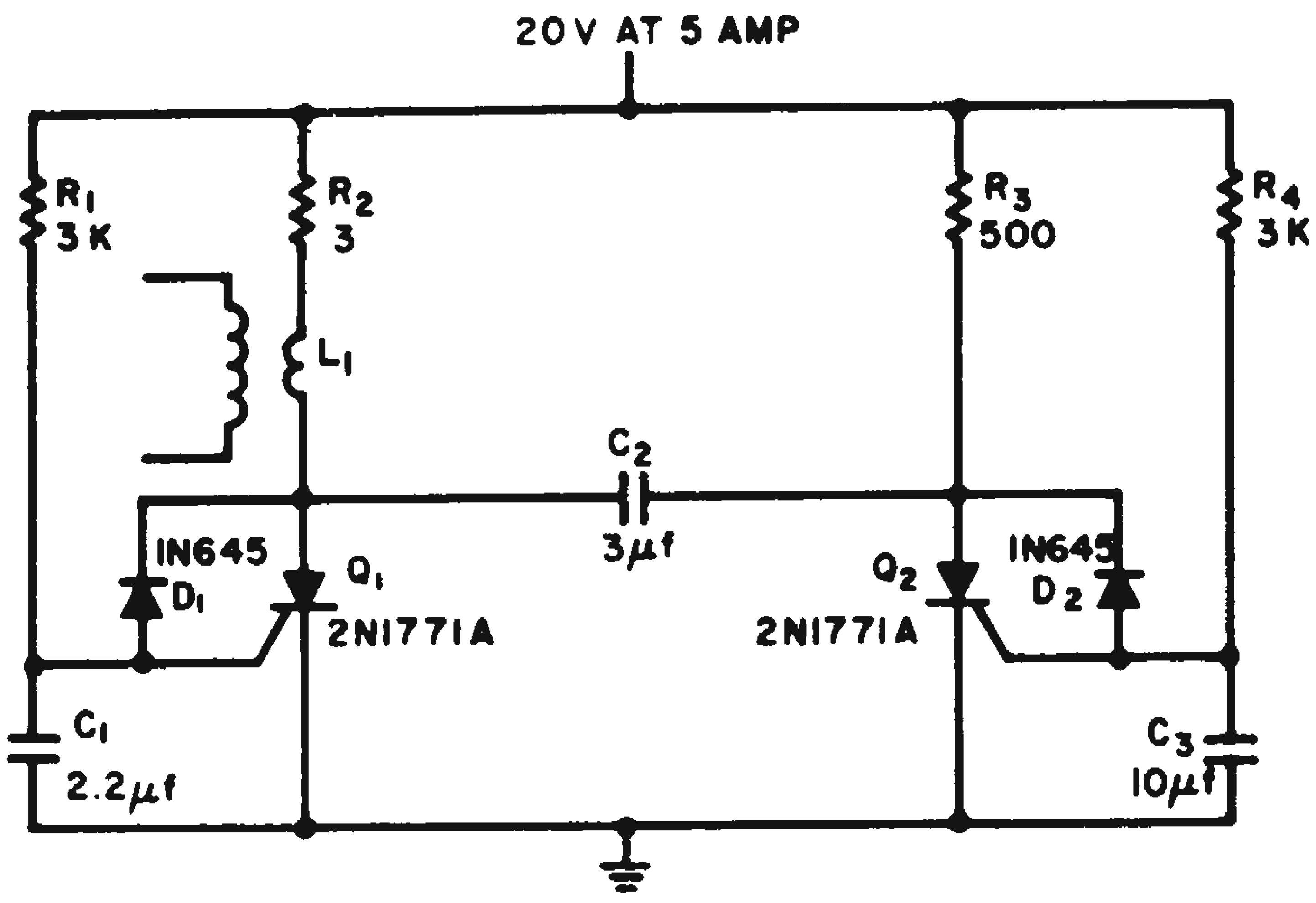

Power supply boosts 20-v input to 20 Kv.

Donald Duffy, research technician, Aeronutronics, Newport Beach, Calif.

Simple Overload Circuit Protects DC Power Supplies

Instantaneous current-overload protection for a dc power supply can be obtained by adding only two components (R_1 and Q_1) to the existing series regulator circuit. Where a series regulator is not used, protection can still be obtained by adding four components (R_1, Q_1, R_2, Q_2). The circuit is very efficient since a current-sampling resistor of only 0.6 ohm is required in series with a 1-amp load.

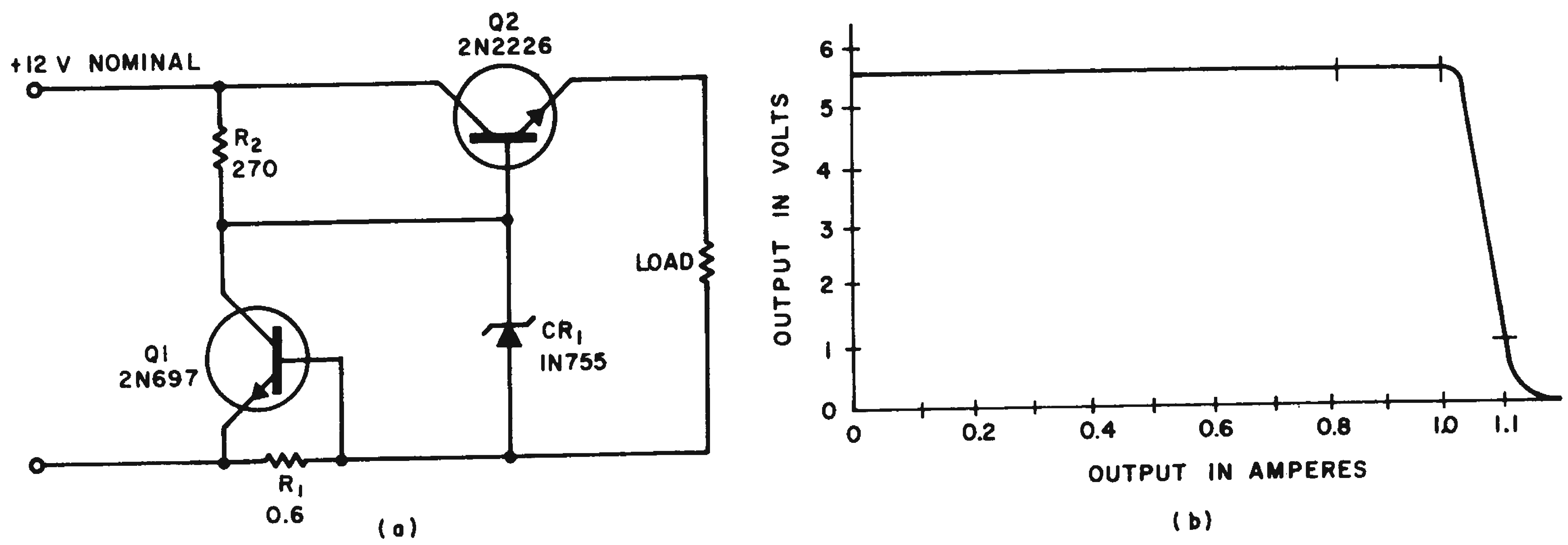

Addition of two components provides overload protection to dc power supply.

Overload protection is provided by transistor Q_1 which is biased into conduction when the voltage drop across R_1 exceeds the silicon transistor energy gap voltage of about 0.6 volt.

As transistor Q_1 conducts, the forward bias is removed from series power transistor Q_2 by the increased voltage drop across R_2. The voltage applied to the load is decreased as Q_2 provides the voltage drop required to limit load current to a predetermined maximum.

When the overload is removed, R_1 again has a normal voltage drop of less than 0.6 volts. This removes forward bias from transistor Q_1 and allows normal operation at full voltage.

The voltage across fixed resistor R_1 is proportional to the load current and the protection circuit becomes in effect a load current regulator as it limits the current through R_1 and the voltage developed across R_1.

Insertion loss of series regulator transistor Q_2 can be reduced by returning its base resistor to a higher voltage than the input voltage.

The component values shown have been selected for conservative operation. However, other currents and voltages may be accommodated as long as the current-voltage envelope of the series pass transistor remains below its permissible power dissipation. The current-limiting value can be adjustable over a wide range by the use of a variable resistor for R_1.

Floyd S. Griffin, laboratory director, Aero Geo Astro Corp., Ft. Walton Beach, Fla.

Dual Transformers Extend Voltage Control Range

Voltage variations beyond the range of a given variable transformer can be obtained by a simple technique.

Select a non-variable transformer of suitable current capacity with a ratio that will provide the required additional voltage. Add the secondary of this transformer in series with the variable arm of the autotransformer.

Apply power to the input of the autotransformer so that its common terminal is at low voltage or ground. Adjust the autotransformer output to nominal and while metering this, apply power to the primary of the fixed transformer in such a phase as to produce the desired increase or decrease in voltage.

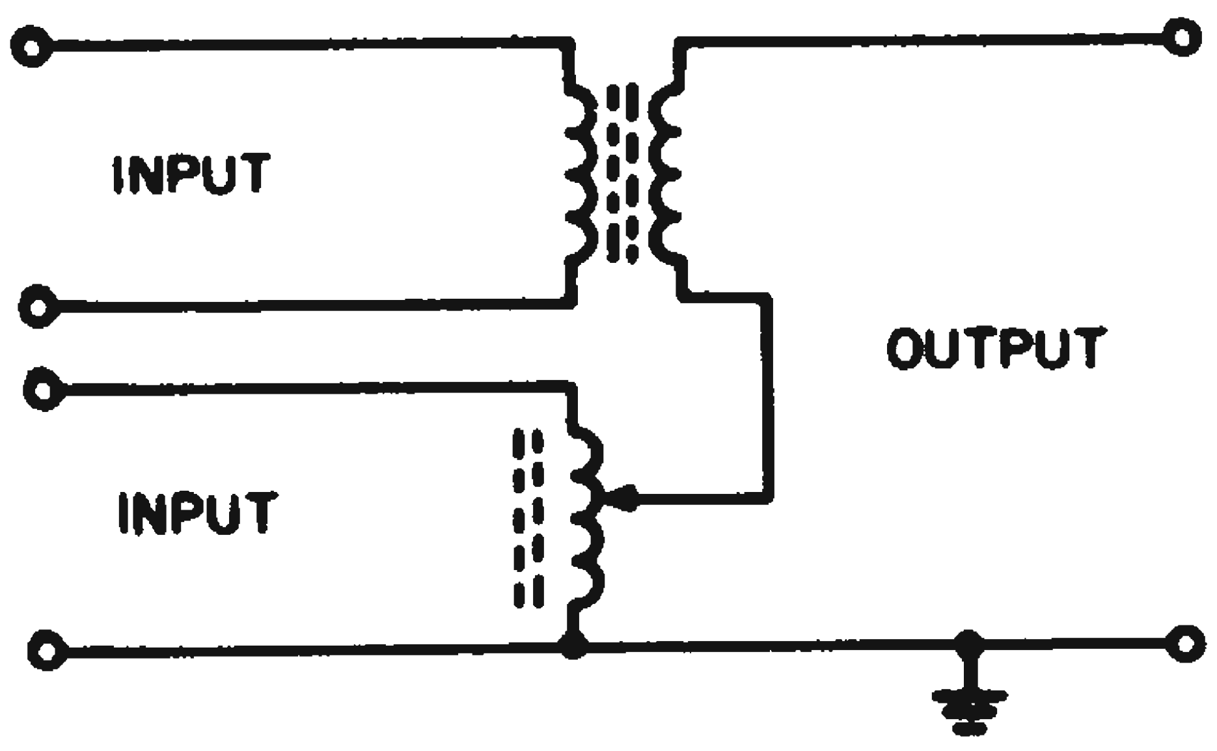

Series secondary of added transformer provides wider voltage range and phase reversal.

When the added transformer is properly selected and phased, it will be possible to adjust the total output to zero volts. About this null, the voltage will increase in both directions, but with opposite phases. This provides a simple generator for some ac servo tests.

George L. Barnard, senior engineer, Aero-Med Electronics, Washington, D. C.

Voltage Sensor Monitors Multiple Power Supply Outputs

In a complex system containing many power supplies and voltage levels, it is desirable to know at a glance whether all voltages are at the proper level. A simple comparison amplifier and a summing junction can be used to compare the voltage at the junction to some reference. Any change in the summing junction voltage will unbalance the comparison amplifier and cause the lamp to glow.

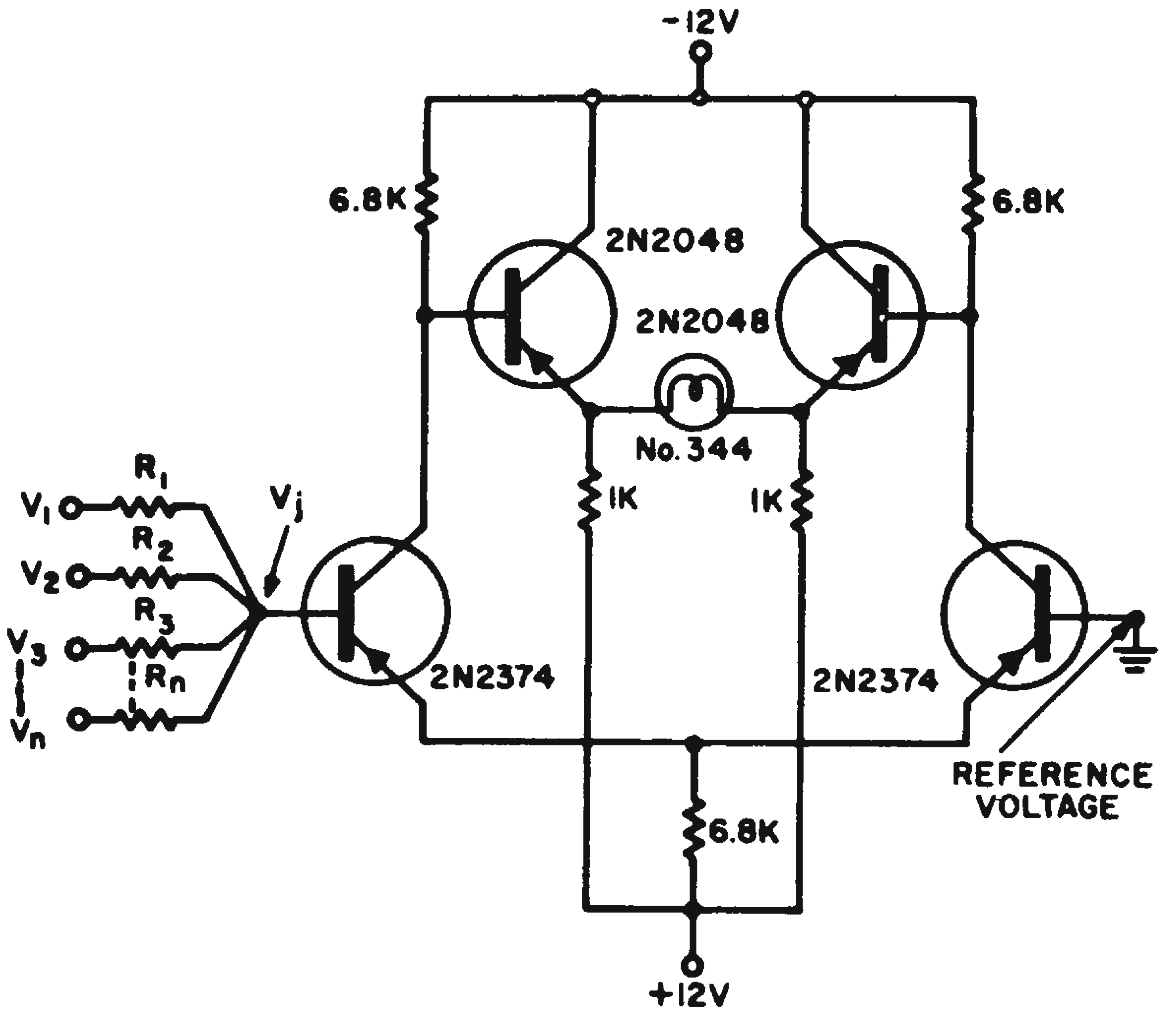

Comparison amplifier monitors a large number of power supply voltages.

If the voltage levels to be sensed are of both polarities, the summing junction may be designed so that the junction voltage is zero. In this case, the comparison amplifier reference can be system ground as illustrated.

Equations for the design of the summing junction are as follows: let i_1, i_2, i_3, $\cdots$ i_n be the various junction currents and V_1, V_2, V_3, $\cdots$ V_n be the various voltages to be sensed. Let V_j be the junction voltage. Let R_1, R_2, R_3, $\cdots$ R_n be the various summing resistances. Then

$$i_1 + i_2 + i_3 + \cdots + i_n = 0$$

and

$$R_1 = \frac{V_1 - V_j}{i_1},\ R_2 = \frac{V_2 - V_j}{i_2},\ R_3 = \frac{V_3 - V_j}{i_3}$$

$$\cdots \qquad R_n = \frac{V_n - V_j}{i_n}$$

In the circuit shown, $V_j = 0$ and the equations are simplified.

The circuit will sense and indicate voltage levels outside of a tolerance governed by the amount of current summed. However, a figure of ±5 per cent is a realistic value.

Richard C. Gerdes, engineer, Kitt Peak National Observatory, Tucson, Ariz.

Counter Drive Circuit Monitors AC-Line Frequency

Monitoring a 400-cps sine-wave power line with a digital counter requires generation of a short-duration pulse from each cycle of the ac source. A simple circuit can provide these pulses with rise and fall times of less than 0.2 msec and a pulse width of 1 μsec.

The simplicity of the circuit lies in the avalanche diode, D_1, which does not conduct in the forward direction until the voltage exceeds some critical value. Then the diode switches very rapidly into a conducting state with a low voltage drop.

Capacitor C_1 starts charging on the positive half cycle of the ac waveform until it reaches the trigger potential of the avalanche diode. The diode switches on and starts discharging the capacitor into the pulse transformer windings. The pulse coupled through the transformer causes the silicon-controlled rectifier to fire after a short delay. When the SCR fires, the capacitor is discharged and the output pulse is terminated. The SCR remains on for the remainder of the half-cycle and prevents the capacitor from charging again.

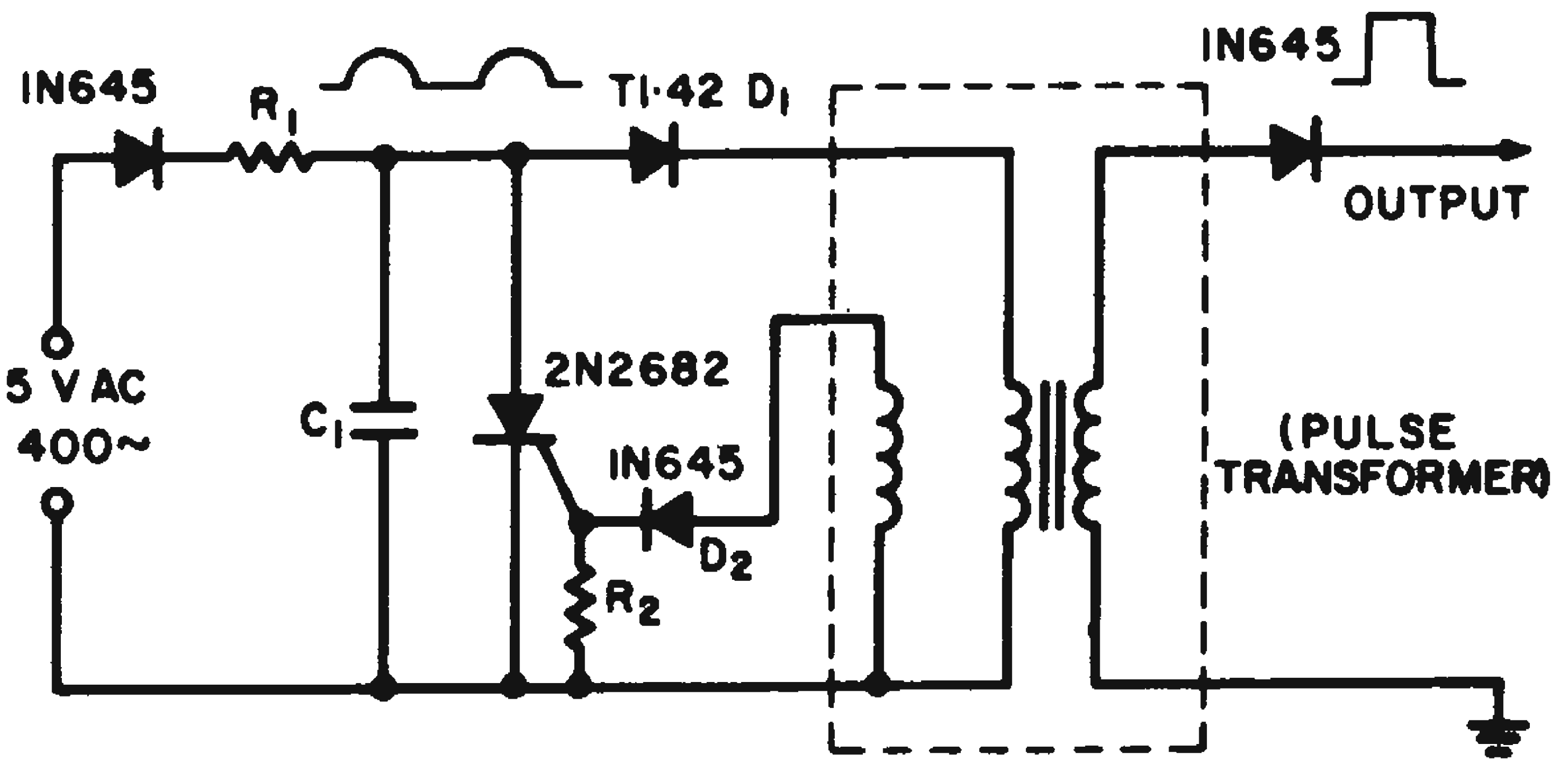

Simple SCR circuit generates pulse output for digital line-frequency monitor.

Noise rejection characteristics are provided by the integrating effect of the RC network. Output pulse amplitude is in the range of 5 to 10 volts.

Lawrence Smith, Martin Co., Orlando, Fla.

Motor Control System Isolates AC Lines from DC Circuits

Electronic isolation between ac lines and the dc controlling circuitry eliminates the need for a relatively bulky isolation transformer. It also eliminates "sneak paths" in solid-state motor controls. These paths are often encountered when an added feature like motor reversal is required.

The specific design problem that led to this circuit development was to control a motor-driven rf attenuator when the bias of an rf amplifier exceeded specified limits.

The 2N493A, in the diagram, is a unijunction relaxation oscillator, which also acts as a comparator. Biased as shown, the unijunction transistor peak-point is 7 volts. Before the 2N493A can oscillate, C_1 must charge to this voltage. The amplitude of the generated pulses is independent of the dc input level. As the input voltage is increased above the peak-point voltage, the pulse repetition rate increases. The 9.1-volt Zener diode limits the input voltage, which in turn limits the maximum repetition rate. Transformer T_1 couples the pulses generated by the unijunction transistors to the silicon-controlled rectifier gate. A 270-ohm resistor in series with the secondary winding of the transformer limits the peak gate current. The diode connected from the gate to the SCR cathode clips the negative peaks of the pulse. The transformer is connected to produce pulses in a positive direction above the zero-volt average.

The five diodes form a bridge arrangement permitting the use of a single SCR to provide full-wave control of the ac power.

The SCR turns off every time the current falls below the holding current of 0.5 milliamps. If the oscillator is triggered on and is providing pulses, the first pulse at the SCR gate will turn the SCR on. The SCR is therefore being triggered on and off at the line frequency rate. The longest time the ac power can be interrupted is a function of the repetition rate of the unijunction oscillator or approximately 0.3 msec.

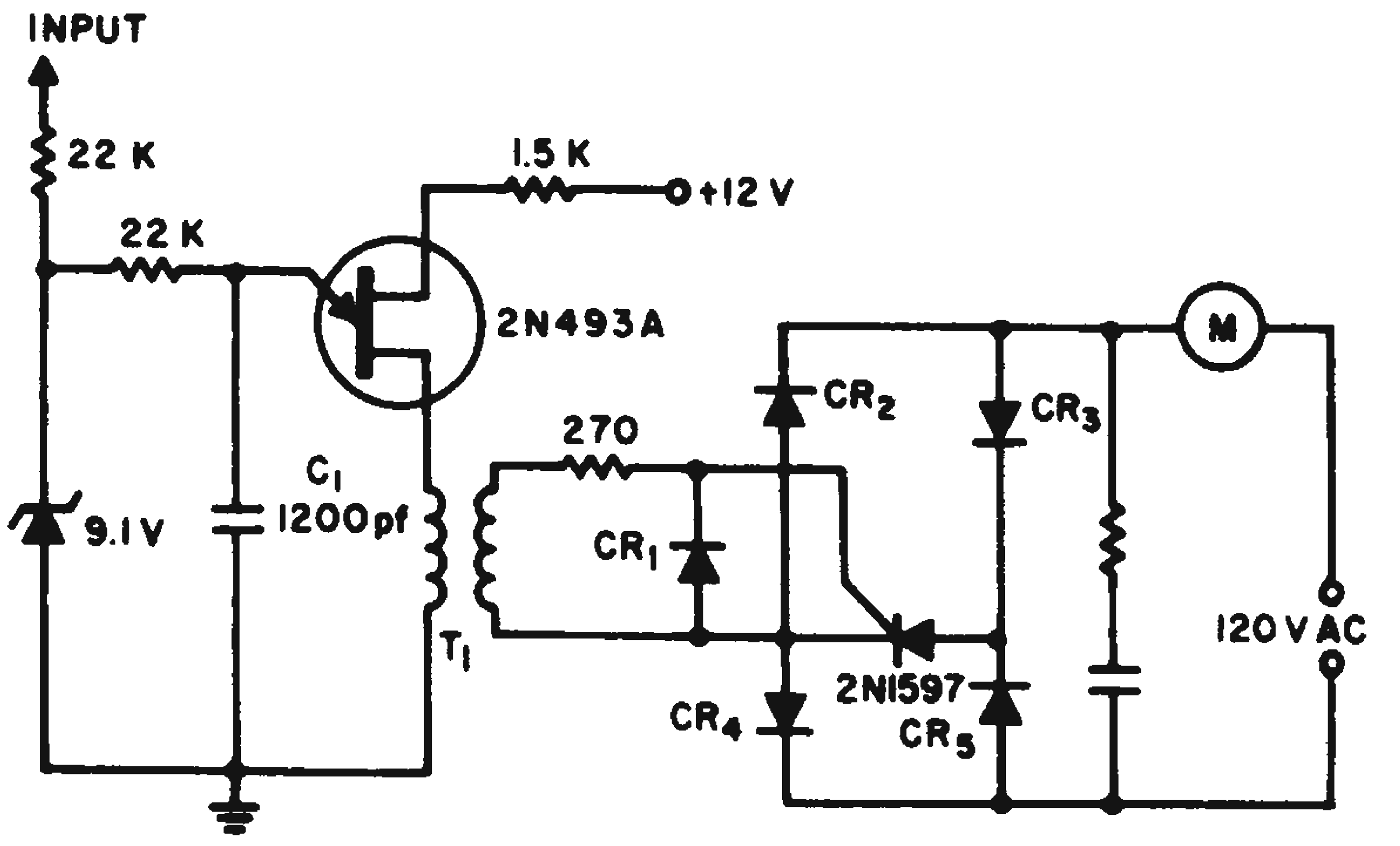

Transformer coupled unijunction transistor provides motor control with isolation.

The series resistor and capacitor arrangement at the output of the bridge suppresses transient caused by motor induction.

Steven Steckler, engineer, Westrex Co., a division of Litton Systems, Inc., New York, N. Y.

Inexpensive DC-to-DC Converter Operates Without Rectifier Diodes

Most dc-to-dc converters use two transistors, a transformer and rectifier diodes. The converter circuit shown in Fig. 1 uses a single transistor, which serves as both oscillator and rectifier.

The load and its shunting capacitor bias the transistor off. The transistor therefore is turned on for only a small angle in each cycle. A conversion efficiency of 70 per cent has been attained for a 5-to-1 (3 v-to-15-v) step-up at an operating frequency of 100 kc.

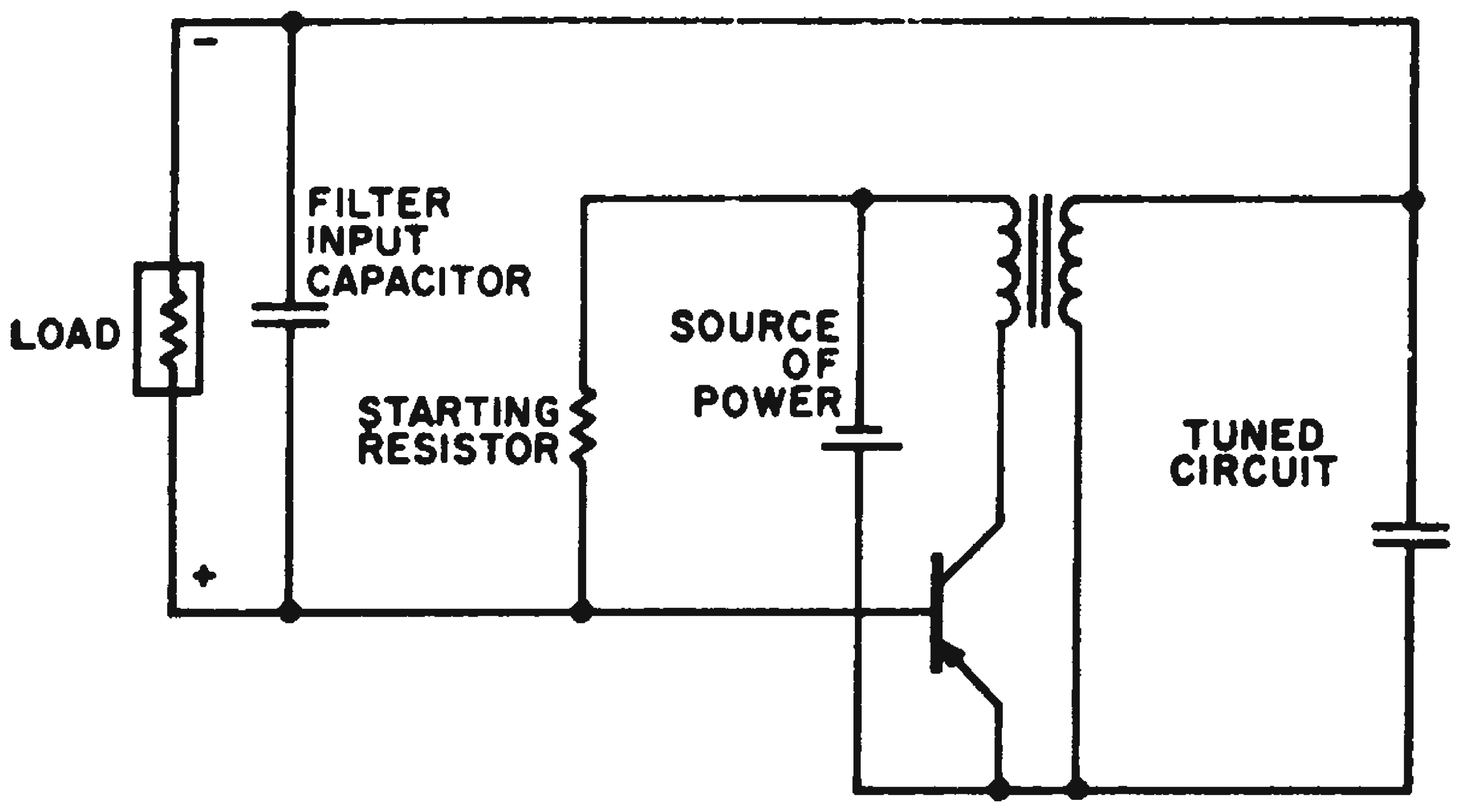

Fig. 1. Transistor acts as oscillator and rectifier in dc-to-dc converter.

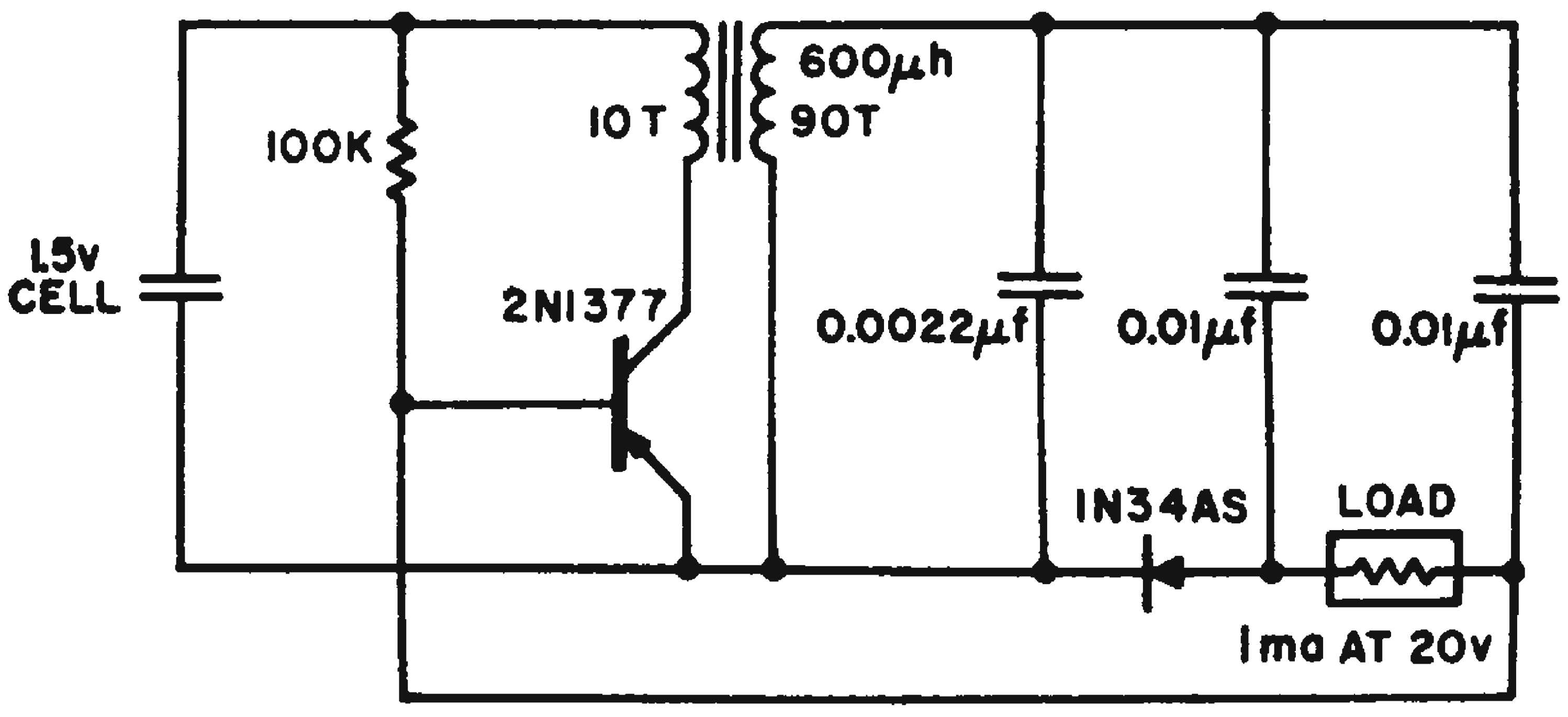

Fig. 2. Base-to-emitter diode provides full-wave doubling for higher step-up ratios.

For higher step-up ratios, or where the load voltage would exceed the base-to-emitter avalanche potential in the circuit of Fig. 1, the modified circuit of Fig. 2 is useful. Here, the base-emitter diode serves in a full-wave doubler. This circuit has been used to supply 20 v at 1 ma when driven by a penlight cell.

W. R. Kundert, development engineer, General Radio Co., Concord, Mass.

Simple Current-Limited Voltage Source

During the experimental stages of a circuit design it sometimes is convenient to use individual current-limited voltage sources for some critical stages—for instance a transistor stage containing only a transformer in its collector circuit.

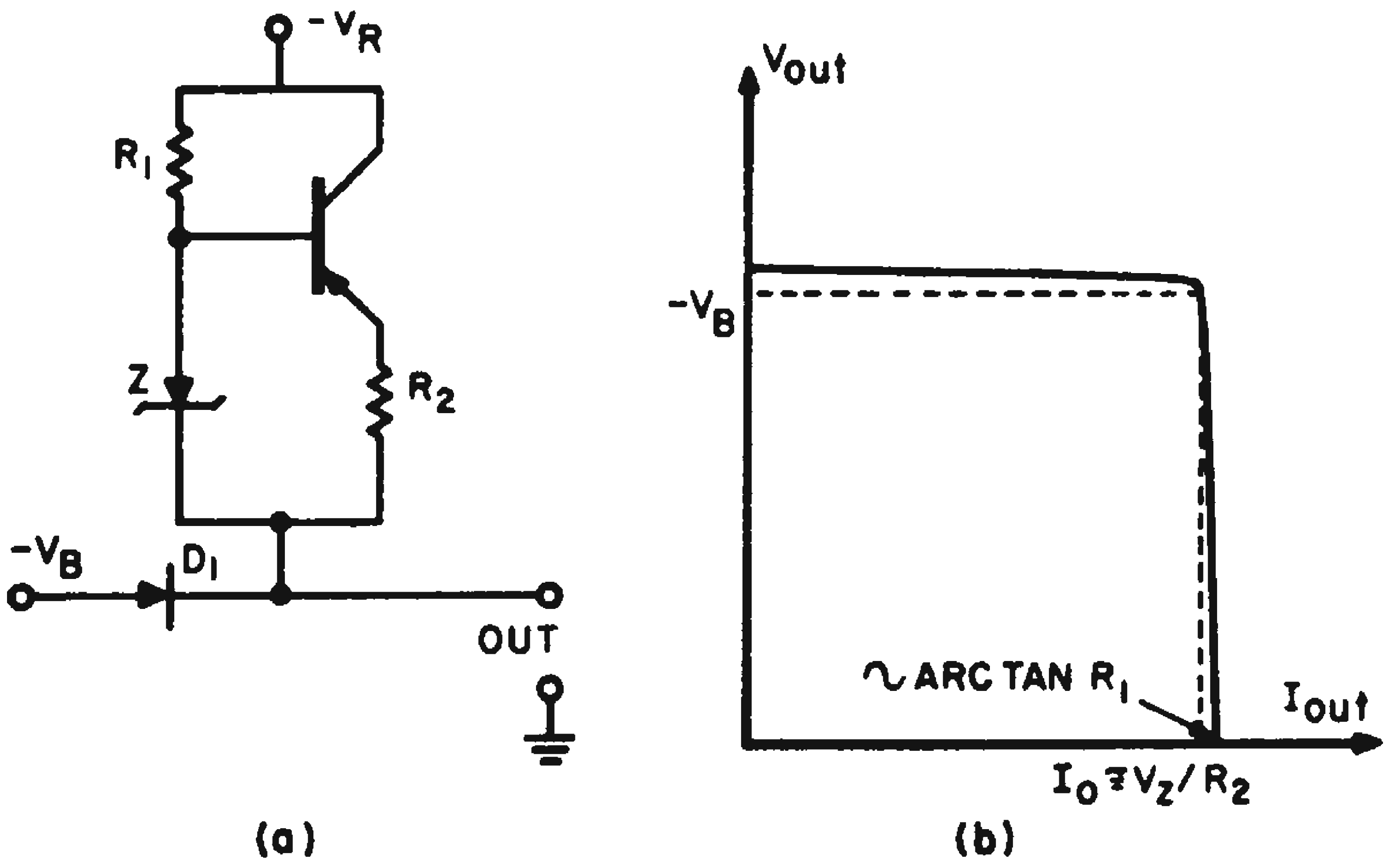

Current-limited voltage source (a) provides output characteristic at (b).

The circuit consists of a constant-current generator (transistor, Zener diode and resistors R_1 and R_2) and a catching diode biased by the voltage $-V_B$.

If the current required by the load is less than that supplied by the constant-current generator diode *D* conducts. Hence the output voltage is slightly less than $-V_B$ and the output impedance is equal to the differential resistance of the diode *D*. However, if the current required by the load equals or exceeds the current supplied by the constant-current generator, the diode *D* is cut off and the output impedance of this device increases rapidly to that of the constant-current generator.

Zvi Netter, research engineer, Ministry of Defense, Hakirya, Tel Aviv, Israel.

Lighted Photocell Replaces Mercury Bias Battery

Requirements in electronics equipment for low-voltage, low-current biasing sources are met, when convenient, with mercury batteries. Their great disadvantage is that they must be periodically replaced. The alternative of a transformer-rectifier-Zener diode combination is relatively bulky and expensive.

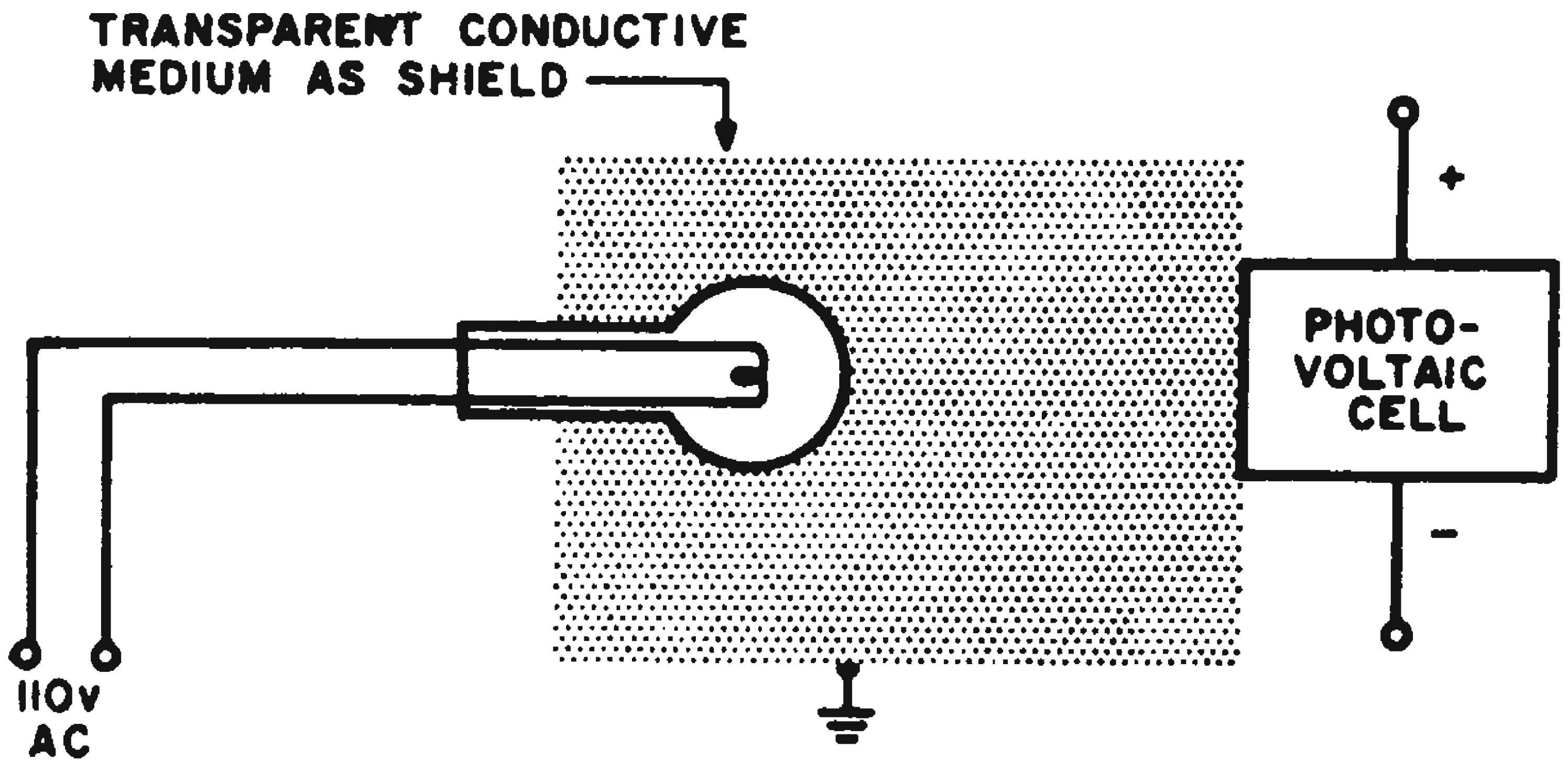

Light falling on photovoltaic cell sets up potentials that can be used for low-voltage, low-current source requirements.

A permanent replacement for the mercury bias battery can be made by combining a photovoltaic cell and a light bulb. Silicon or selenium photocells may be used. Several cells may be connected in series for increased voltage. Combination light-photovoltaic cell units can be made for this purpose, analogous to the light-photoresistor combinations that are now commercially available.

Dr. F. W. Cope, research scientist, Aviation Medical Acceleration Laboratory, Naval Air Development Center, Johnsville, Pa.

VR Tube, Removed From Load, Is Fired By Source

Occasionally, a voltage regulator tube will not be able to fire because there is insufficient potential across its terminals. Such a situation is present, for example, in the circuit of Fig. 1.

A solution to the problem is shown in Fig. 2. A silicon diode D_1 disconnects R_1 and the load from point A until the VR is fired by the potential applied through R_2. The circuit then operates in the normal manner except for about a 0.5-v increase in the regulated voltage because of the drop across D_1.

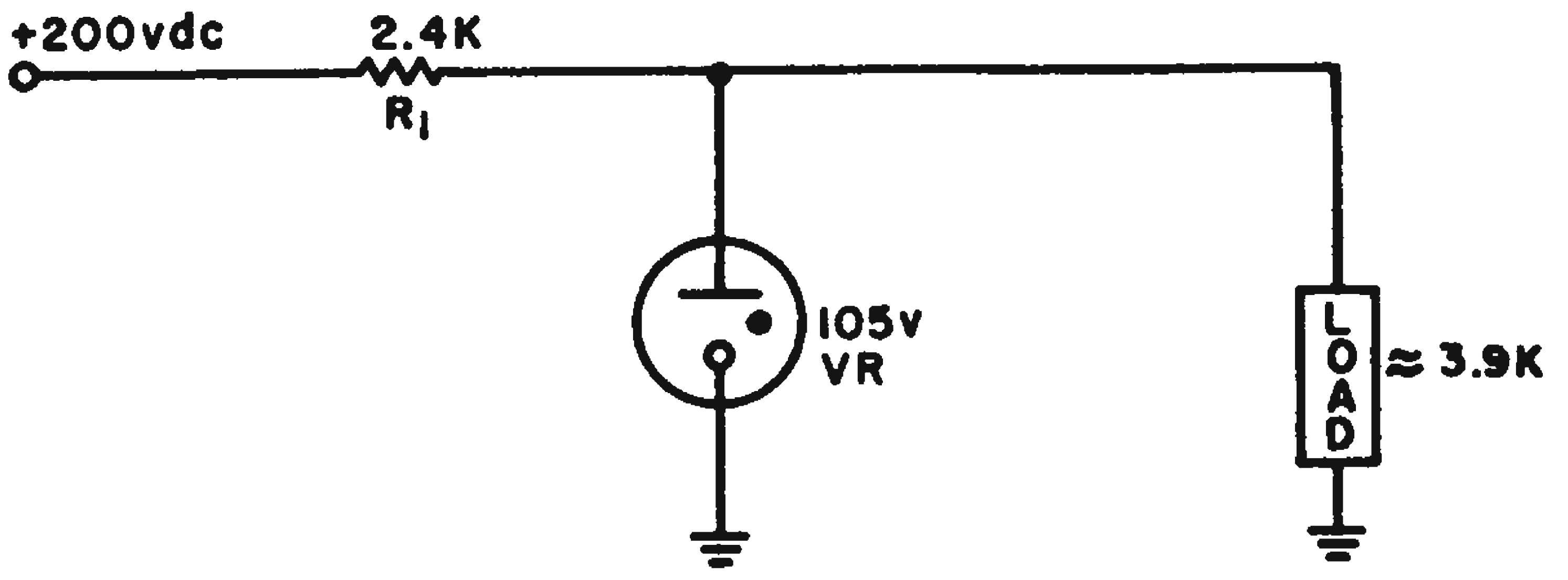

Fig. 1. VR tube will not fire because circuit does not put sufficient potential across its terminals.

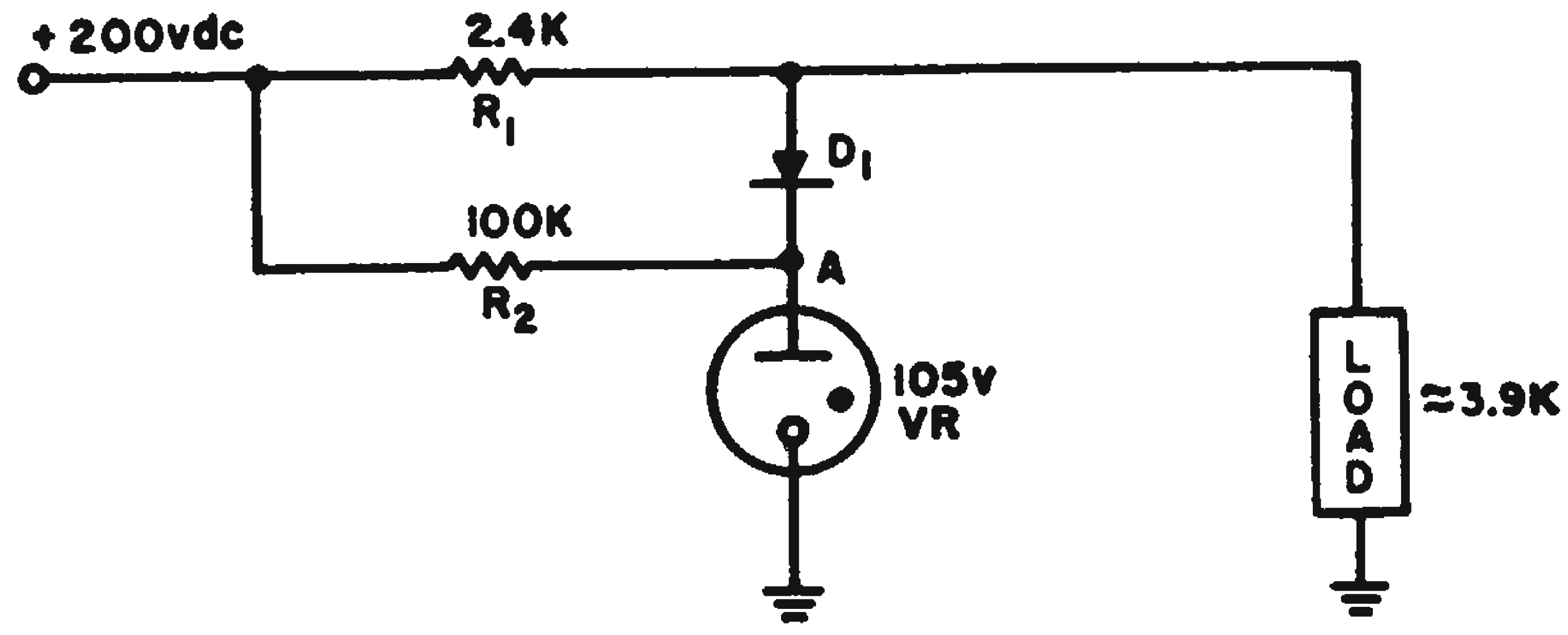

Fig. 2. Added diode D_1 disconnects VR tube from load, fires it directly from source.

Matt Cousins, electrical engineer, Airtronics Inc., Washington, D. C.

Regulator-Doubler Eliminates Need for Second Power Supply

Design of a vacuum-tube circuit included one phantastron-type stage to generate a timing sawtooth having a peak-to-peak amplitude of 500 v. This stage required stable B+ voltage of +600 v at a current of approximately 1 ma. The remainder of the tubes in this chassis required only +300 v, which was being supplied by a regulated power supply circuit of ordinary design. The accompanying schematic shows a "regulated voltage-doubling circuit" used to supply the required 1 or 2 ma at +600 v to

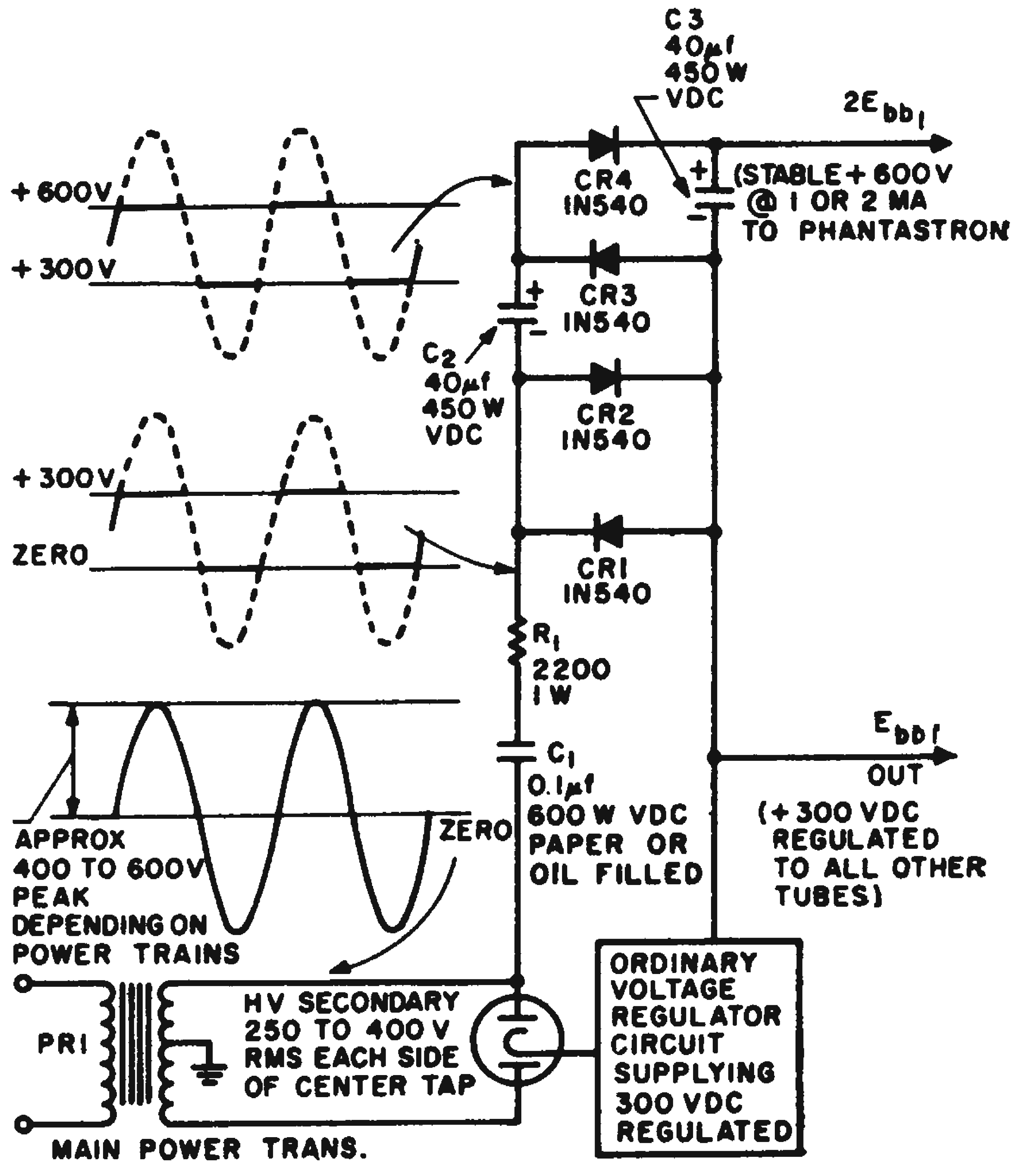

Regulating doubler provides high voltage at low current eliminating need for second power supply.

the phantastron only. This eliminated the need for an additional regulated power supply in the design.

Diodes CR_1, CR_2, CR_3, CR_4 and capacitors C_2 and C_3 need withstand only 300 v. C_1 must withstand the peak value of the ac voltage across half of the secondary winding. R_1 was included to limit the surge current during the turn-on transient. A much lower resistance value—perhaps 47 ohms—would probably be satisfactory for most applications.

A bleeder resistor (now shown) of about 1 megohm may be desirable for safety reasons in some applications. If used, it may be connected in parallel with C_3.

This circuit is quite efficient because it does not employ a power-dissipating principle to accomplish its voltage-regulating function. It does not, therefore, contribute to the chassis heat-dissipation problem.

James W. Carroll, staff member, Sandia Corp., Albuquerque, N. M.

SCR Circuit Breaker Has Fast Operation

A variable electronic circuit breaker that can operate in less than two microseconds is shown in the diagram. The voltage developed at the slider of the potentiometer increases with current until it fires the SCR. The transistor switch is then cutoff, due to lack of base drive, and no current is supplied to the load. Reset is accomplished by removing the supply voltage to the SCR. The circuit shown may be set for any desired maximum load current between 100 and 300 ma. The Zener diode is required because the forward voltage drop on the SCR is sufficient to forward bias the base-to-emitter junction on the 2N2102.

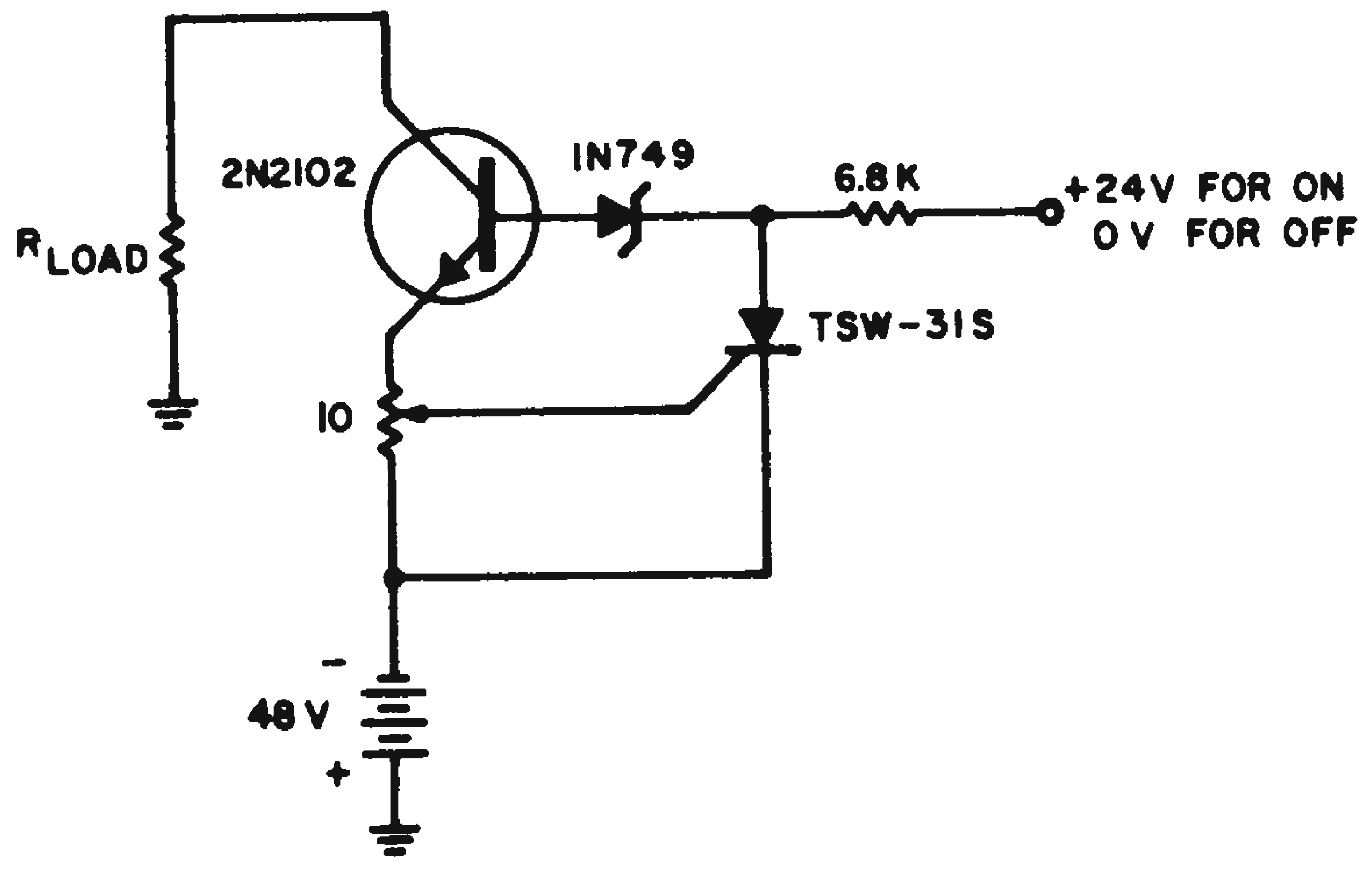

Fast acting circuit breaker is adjustable over a range from 100 to 300 ma.

James A. Means, electronic engineer, Pacific Missile Range, Point Mugu, Calif.

Flip-Flop Relay Driver Eliminates Emitter Follower

The conventional method of driving a solenoid or relay from a control flip-flop is to drive the transistor switch with an emitter follower. The follower, in turn, is driven by the flip-flop.

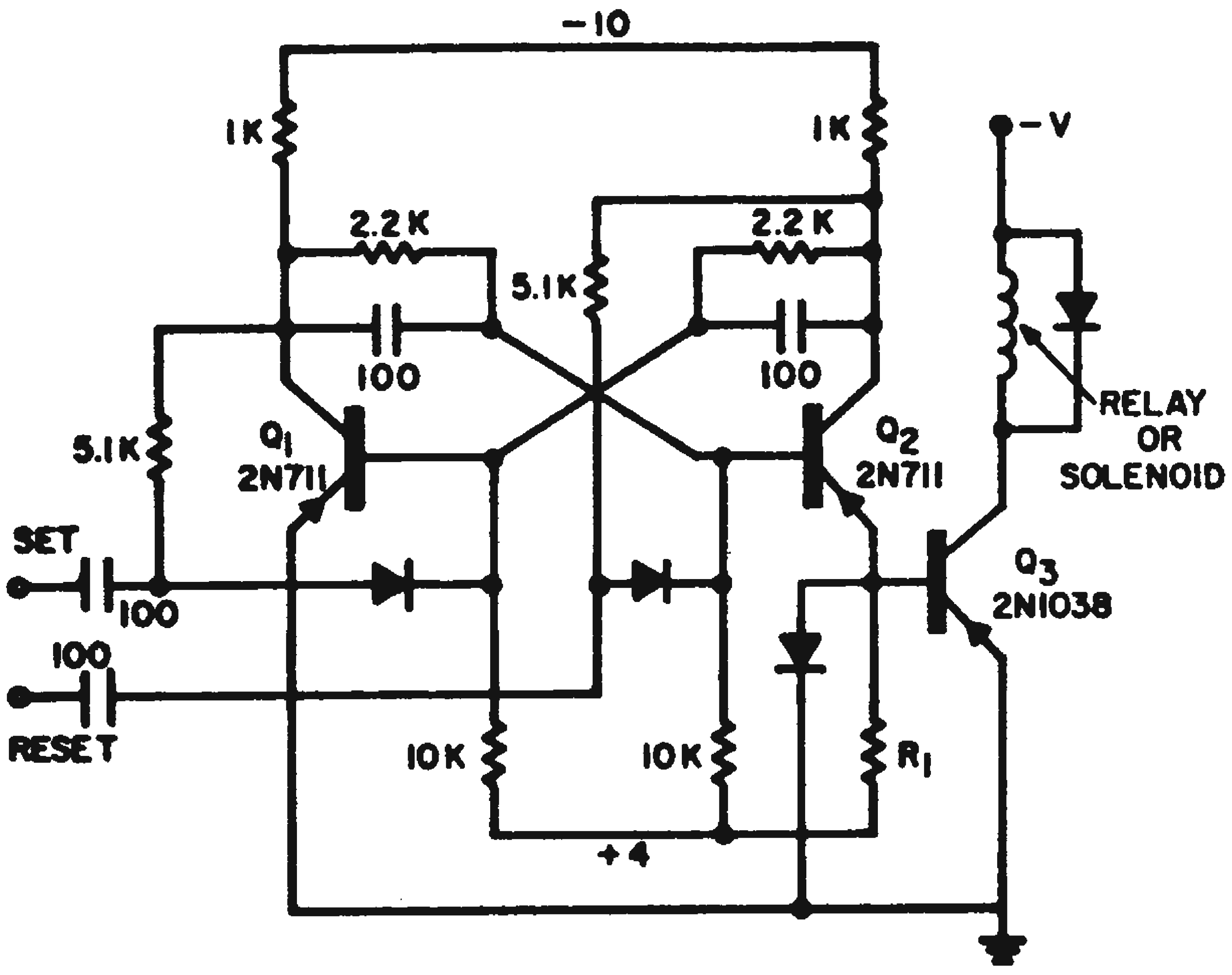

Fig. 1. Emitter follower is eliminated by putting transistor switch Q_3 in the emitter circuit of driver.

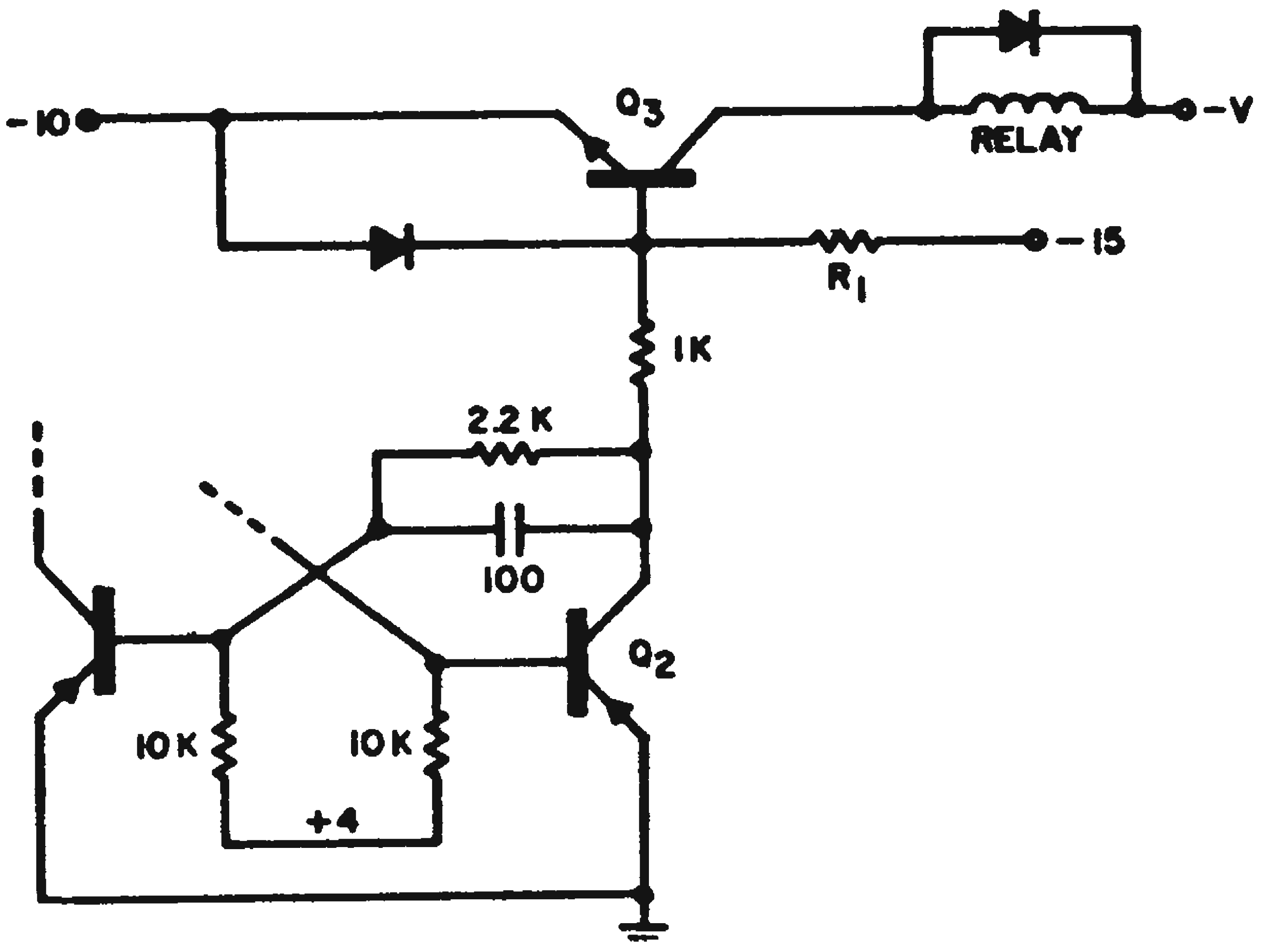

Fig. 2. Alternate switch driven method places switching transistor in collector circuit of flip-flop transistor.

By putting the switch directly in the emitter circuit of one of the flip-flop transistors, the emitter follower can be eliminated. In Fig. 1, Q_2 draws virtually all of its emitter current through the base of Q_3. Resistor R_1 supplies I_{co} to the base of Q_3, and diode CR_1 clamps the emitter of Q_2 when Q_1 is conducting.

An alternative method is shown in Fig. 2, using an npn transistor in series with the collector of Q_2. This, however, is slightly less efficient than the first circuit, because R_1 must supply I_{co} and base current for Q_1 when Q_2 is cutoff.

Phillip Joujon-Roche, engineer, Aeronautics, Newport Beach, Calif.

Multi-Buffered Switch Eliminates Contact Bounce

In circuits using toggle or push-button switches to generate digital logic levels or trigger signals, contact bounce may cause objectional noise voltages. However, this noise can be eliminated by letting the switch trigger an ordinary resistance-coupled bistable multivibrator as shown in the figure. The switch is a double-throw type. As it is thrown from one contact to the other, the complementary outputs of the multi provide fast, simultaneous switching, free of contact noise.

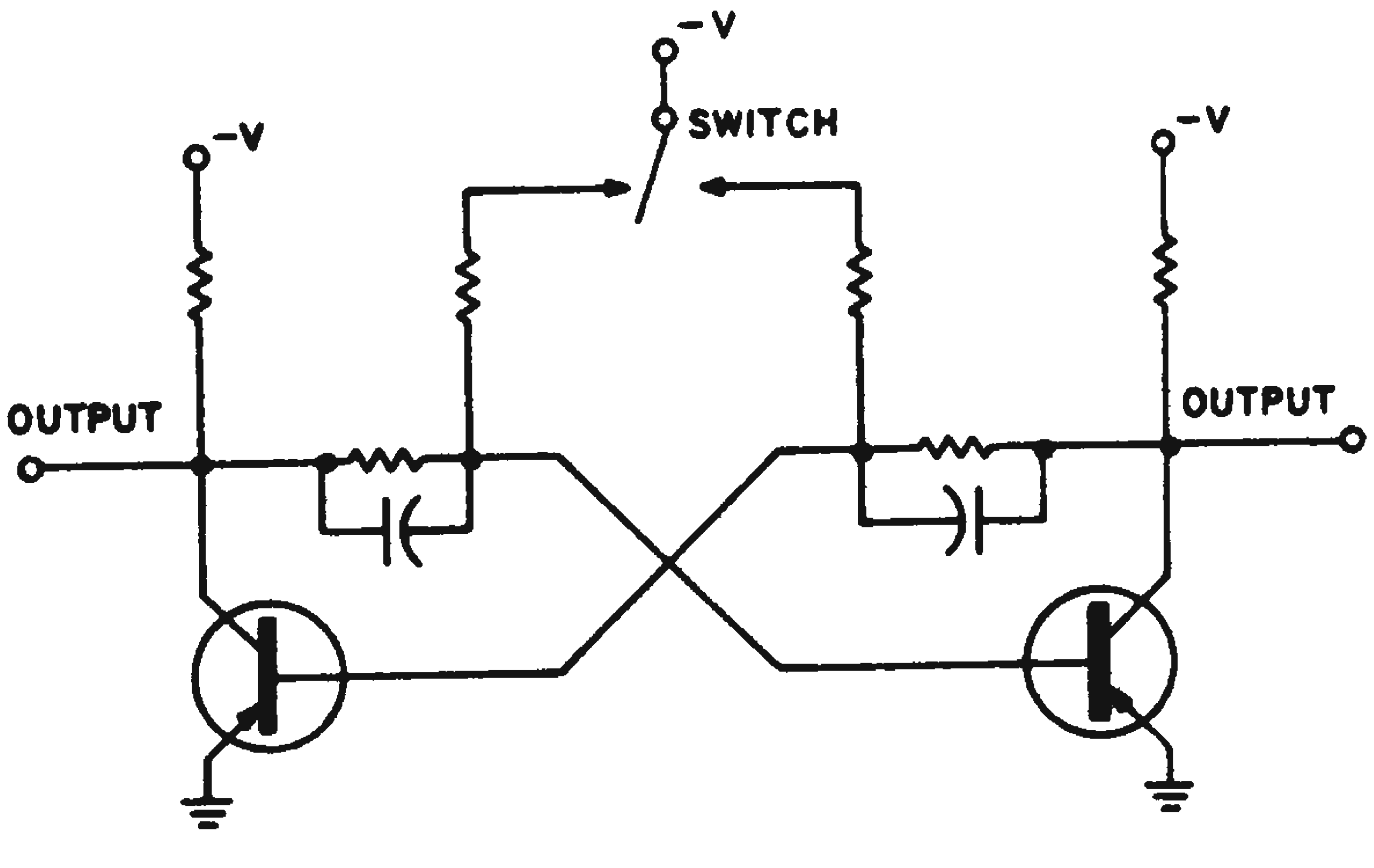

Problem of contact bounce in switch-generated trigger signals is eliminated by using the switch to flip a bistable multi, then using the multi's outputs.

Stewart T. Coffin, Head of Engineering, Dynamic Controls Co., Cambridge, Mass.

Relay Bridging Avoided Through Isolation Scheme

This circuit will prevent bridging or erroneous closing of relay contacts in a multiplexer, even when the drive switches have considerable chatter and could accidentally make contact. The circuit applies to any number of relays. Only two extra contacts per relay are required.

When any switch energizes a specific relay, no other coil can be energized until the contacts of the first relay change state.

In Fig. 1, the relay coils are designated *A, B, C,* etc., and the corresponding switches that control them are labelled *a, b, c,* etc. The additional, normally closed contacts that provide circuit isolation are K_a, K_b, K_c...; note that they are in pairs, except for the first and last relays.

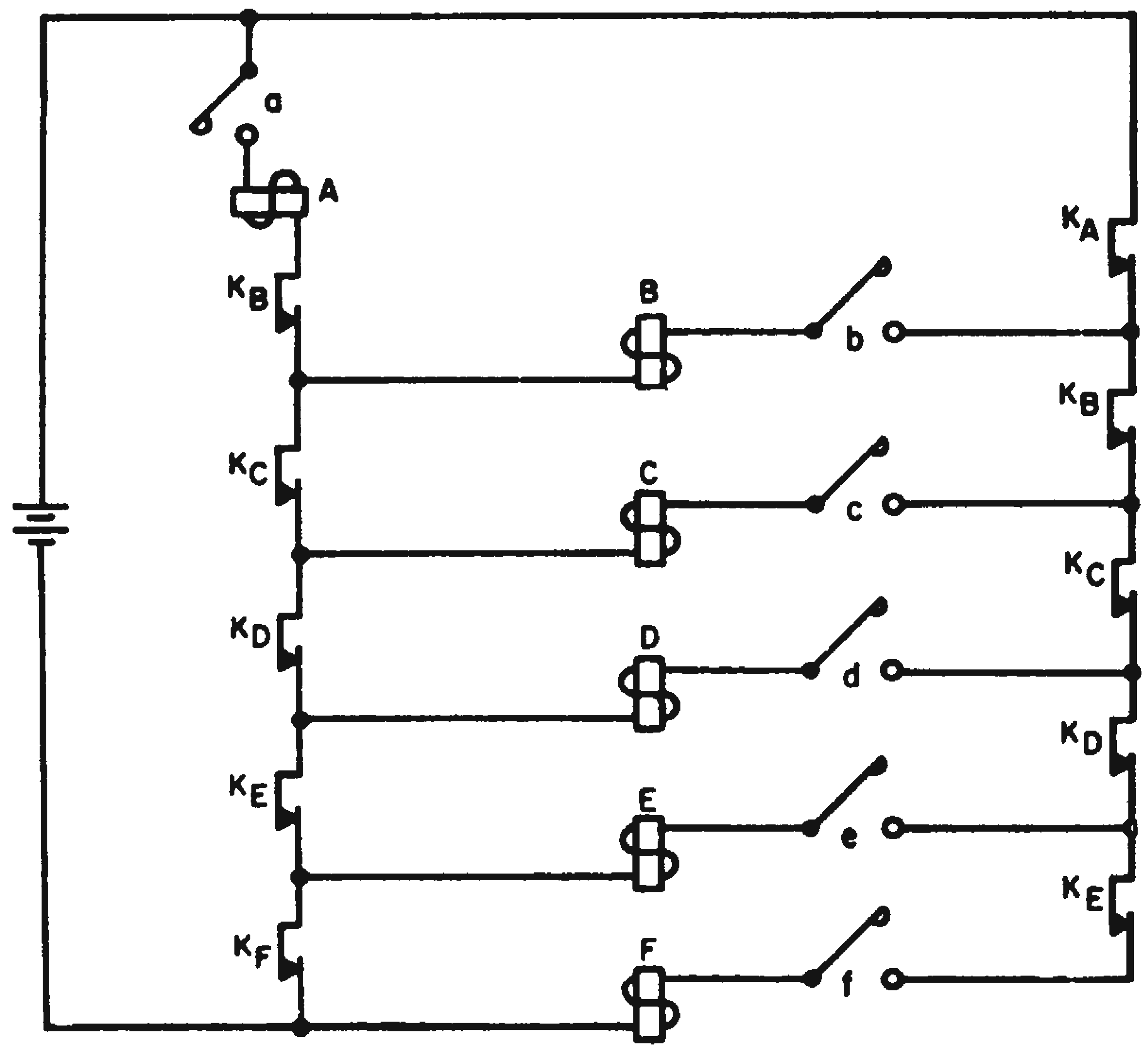

Extra relay contacts, K_a, K_b, K_c, etc., operate in pairs to isolate all but the functioning relay from the supply voltage.

To illustrate operation, suppose that switch *d* is closed. *D* is then energized and K_D (both poles) opens. The subsequent closing of any combination of drive switches *a, b, c*...etc. cannot affect any other relay. Should the relays be of the make-before-break type, the shorting time is so much shorter than the closing delay that bridging still cannot occur.

The scheme may be applied to similar situations in solid-state logic gating.

Patrick F. Howden, project engineer, Thompson-Ramo-Wooldridge Computers Co., Canoga Park, Calif.

Stepping Switch Provides Fool-Proof Synchronization

In the circuit configuration shown here loss of synchronization is virtually impossible. There is no way for the master and slave steppers to get out of step except by component failure.

The action of the sync relay is to detect, through the continuity of the point-to-point wiring, from the master to the slave steppers, an error in relative position between the two. This error is represented as the loss of holding voltage across the sync relay coil.

When the relay is released a voltage is applied to the slave stepper coil through its own interrupter contacts, forcing the slave to move until its position is coincident with the master. At this time the holding voltage for the sync relay is re-established through the point-to-point wiring, operating the relay and stopping the slave stepper.

This sequence of events is most easily seen by mentally placing the slave stepper in any position on the diagram, and figuring out the results. The function of the diode between the two stepper coils is to permit simultaneous operation of the steppers in response to a command pulse at the input and to inhibit the operation of the master stepper when the slave is hunting.

When more than two steppers are to be synchronized it is only necessary to dupli-

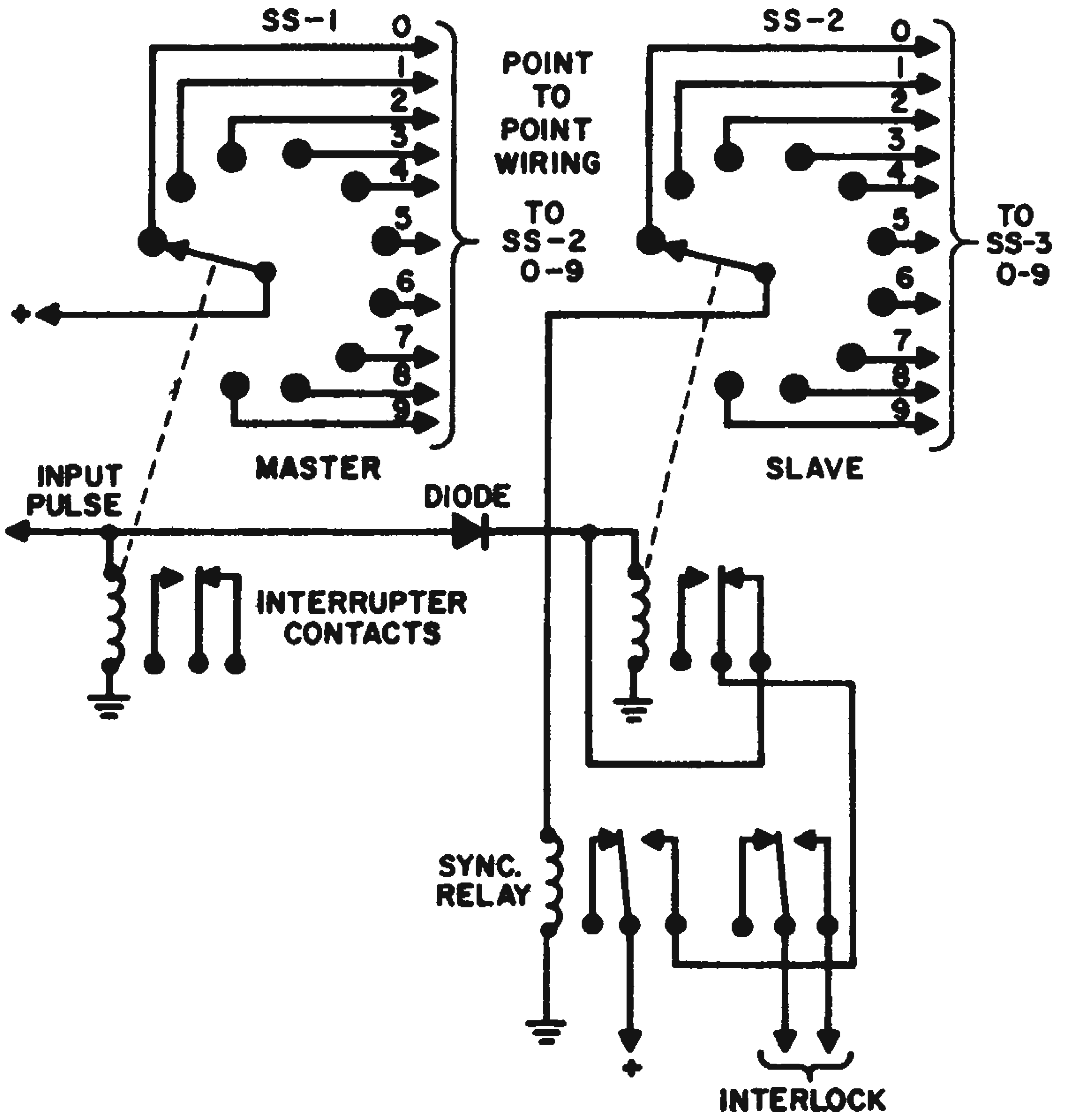

Loss of synchronization of stepping switches energizes slave stepper until proper position is found.

cate relay point-to-point wiring and supply a sync relay for each additional stepper. The contacts on the sync relay labeled "interlock" may be utilized to disable other circuits when the slave stepper is hunting. The only requirement for the sync relay is that it must stay closed between steps and must release fast enough to stop the slave units in the correct position.

Frank L. Egenstafer, project engineer, Jerrold Electronic, Hatboro, Pa.

'Constant-Current' Supply Interlocks Relay Network

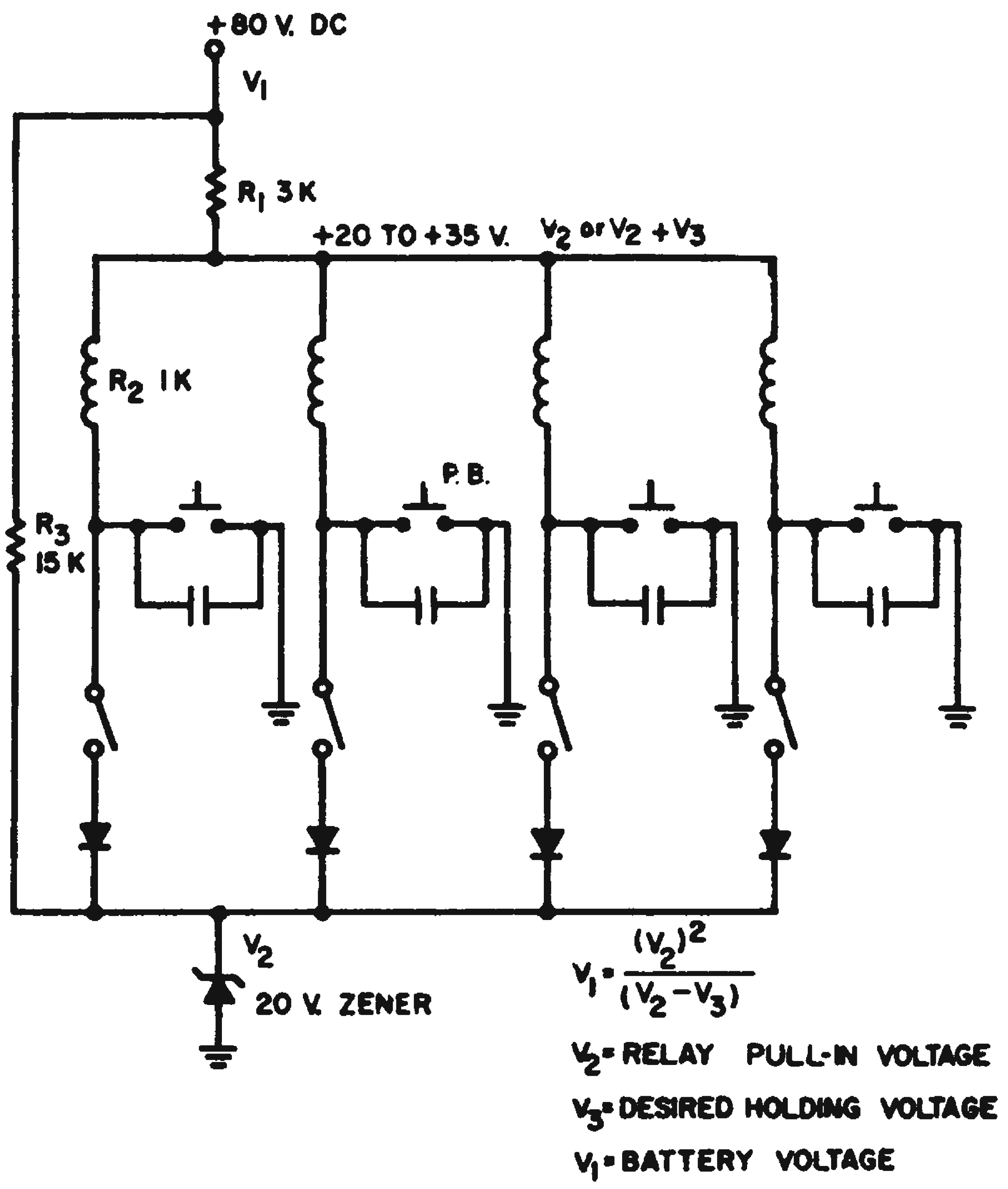

Fig. 1. Interlocks relay control requires only a single conductor for each relay.

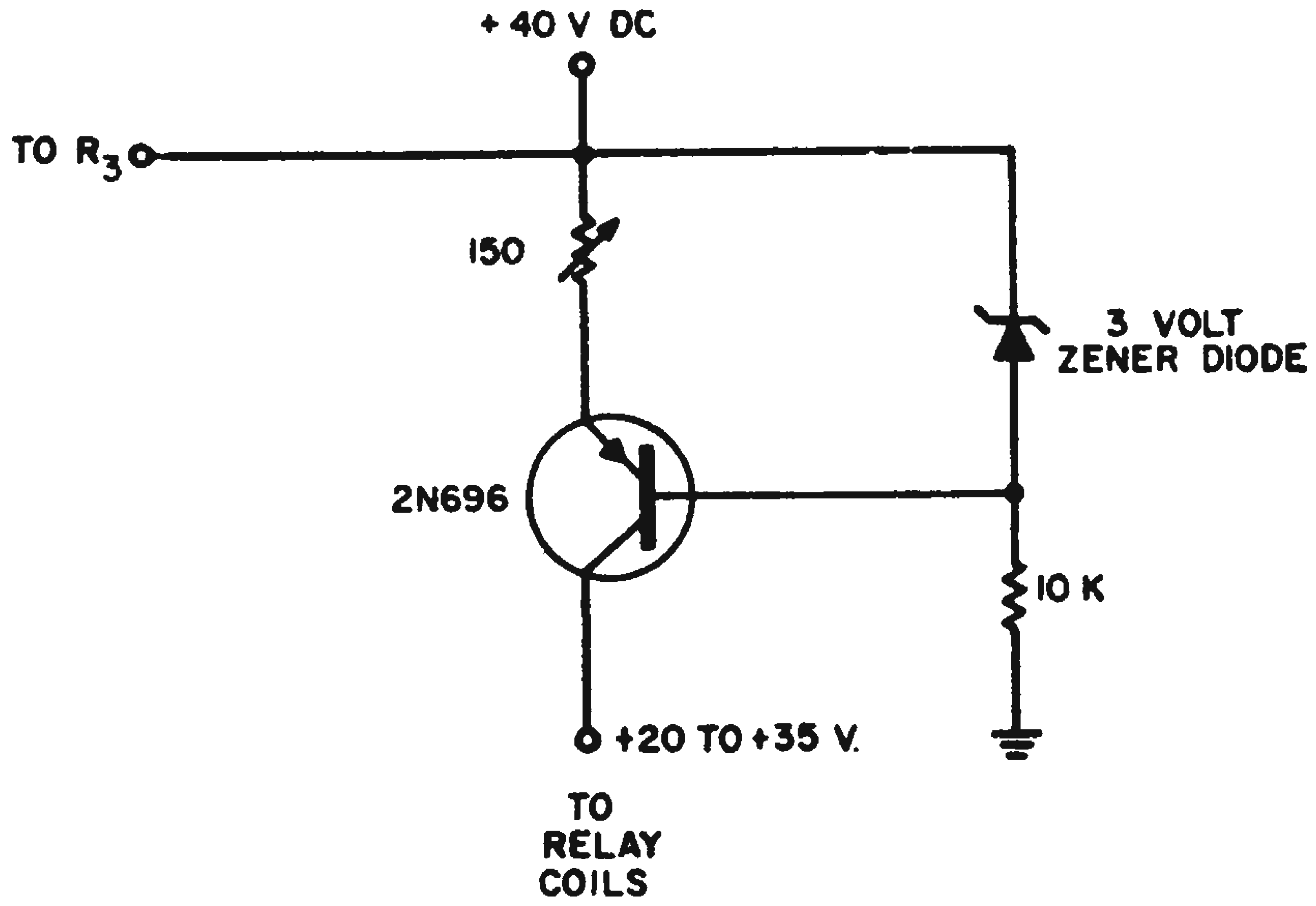

Fig. 2. Transistor regulator reduces power drain on constant-current source.

Interlock circuits become complex when a large number of relays are to be remote-controlled by push-buttons, or where latching of a new relay must unlatch any previously energized relay.

The circuit of Fig. 1 permits these functions with only a single form A contact on each relay for the latching function. Additionally, the remote push-buttons require only a single wire plus common for each relay to be controlled.

In Fig. 1, a quasi-constant current source is obtained by starting with a battery voltage of at least four times the desired pull-in voltage for the relays, and inserting a resistor in series.

The low side of each relay coil goes to ground through a Zener diode rated at the pull-in voltage. This removes voltage from any previously latched coils when a new one is engaged. If reed type, or other fast relays are used, the capacitors shown across the push buttons are not required. With relatively slow drop-out on the relays, a previously engaged coil may not drop out if the button is tapped only momentarily. A firm touch on the button, shunt capacitors, or faster relays will cure the problem.

The power waste in the large series resist usually is not serious since only one relay is energized at a time and the power involved is rather small.

Power loss can be reduced by using a more efficient constant-current source. This could be a fast barretter, a barretter and choke coil in series, or a transistor circuit, as in Fig. 2. The series diodes in the low side of each relay coil prevents the grounding of the Zener diode.

Daniel Cronin, executive vice president Bell Sound Studios, New York, N. Y.

Transistor-Relay Combination Forms Low-Cost Switching Circuit

We wanted to design a simple, low-cost circuit that would supply both a high and low voltage to several dual-input modulators. For this application, the voltages were to switch to their high and low states every 4 sec. Although the problem could have been solved by using a flip-flop, buffer amplifiers would have been needed because of the loading effects of the modulators; thus, the total component cost would increase. However, the circuit shown here accomplished the objective and kept component cost to a minimum.

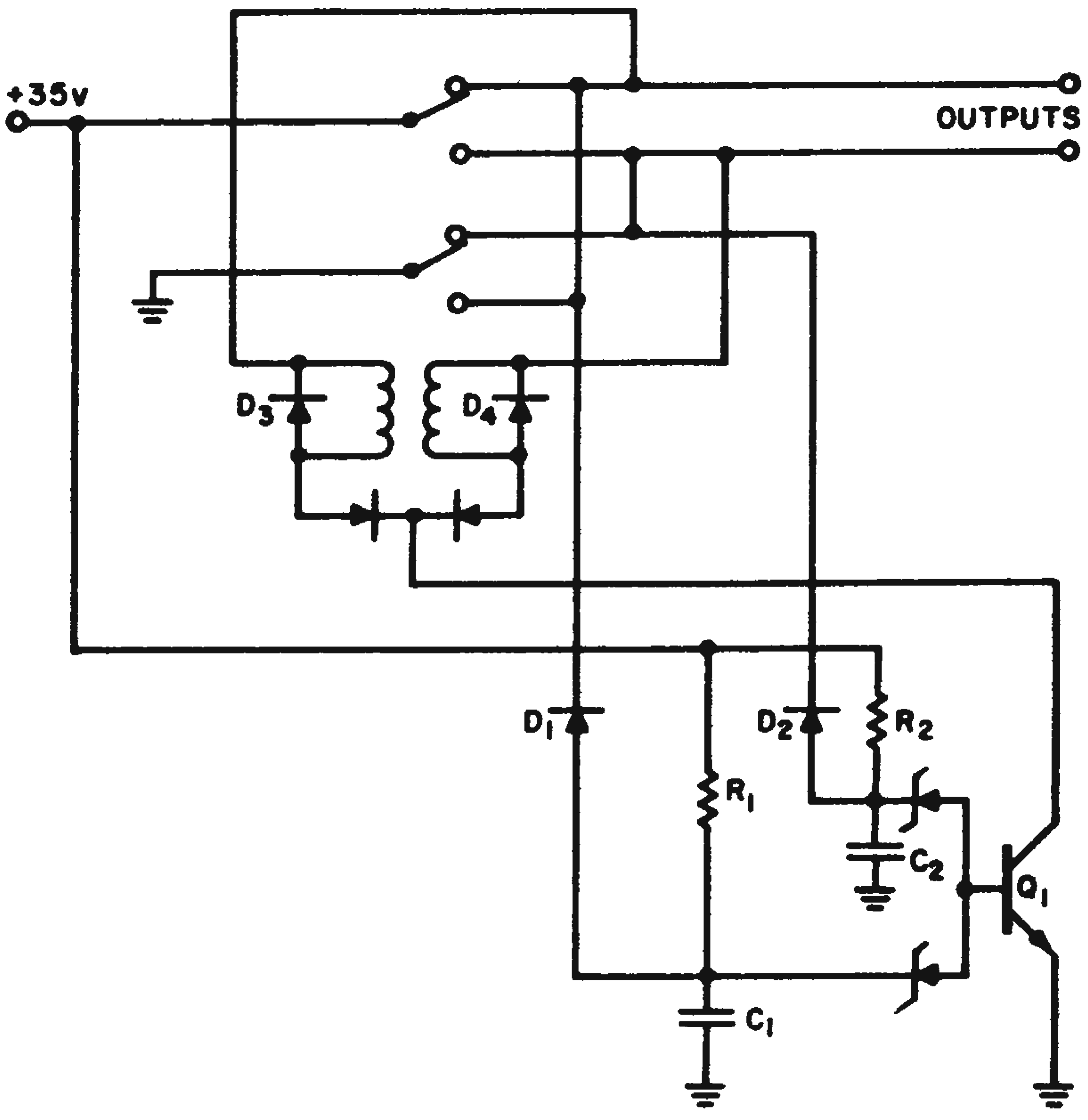

Alternate charging of C_1 and C_2 provide flip-flop action.

Major components are a relay and a transistor, which function in a manner similar to a multivibrator due to the R-C networks at the base of the transistor. The junction of R_1C_1 (and R_2C_2) is alternately connected to ground through the relay contacts. If the junction of R_1C_1 is disconnected from ground, C_1 will begin to change to 35 v through resistor R_1 when power is applied to the circuit. When the charge on C_1 is +15 v dc, the Zener diode breaks down and transistor Q_1 turns on. When Q_1 is on, the relay is energized, the R_1C_1 junction becomes grounded, C_1 discharges, and transistor Q_1 turns off. Capacitor C_2 now can begin to charge and the cycle is repeated.

Michael Cianciola, V. Lemley, engineers, General Precision Inc., San Marcos, Calif.

Voltage-Controlled Relay Selector System

There are many applications requiring a relay system to work from a voltage-controlled device. Fig. 1 shows a circuit capable of closing three relays in 1, 2, 3 order as the input voltage is raised beyond 10, 12, and 15 v respectively. (The voltage levels are arbitrary so long as sufficient collector voltage is available to actuate the relays.)

The transistor base resistors (R_B) are, in effect, limiting resistors that absorb any input voltage in excess of that needed to turn on the relays. Their values determine the turn-on sensitivity of the relay circuit. The following formulas can be used to calculate the sensitivity ΔV, that is, the input voltage in excess of the Zener voltage required for relay turn-on:

$$V_{IN} = V_Z + \Delta V$$
$$V_{IN} \approx V_Z + R_B$$
$$R_B \approx \Delta V \mathrm{B}/I_C$$

where

V_{IN} = the minimum input voltage required for relay closing,
V_Z = breakdown voltage of Zener diode,
I_C = collector current required for relay closing,
B = dc current gain of the transistor, and
R_B = base resistance.

The 2-ohm resistor and the silicon rectifier in the transistor emitter and base circuits form a clamp that limits the current into the relays when the input voltage rises to the firing levels of succeeding relays.

The characteristics of the silicon rectifier

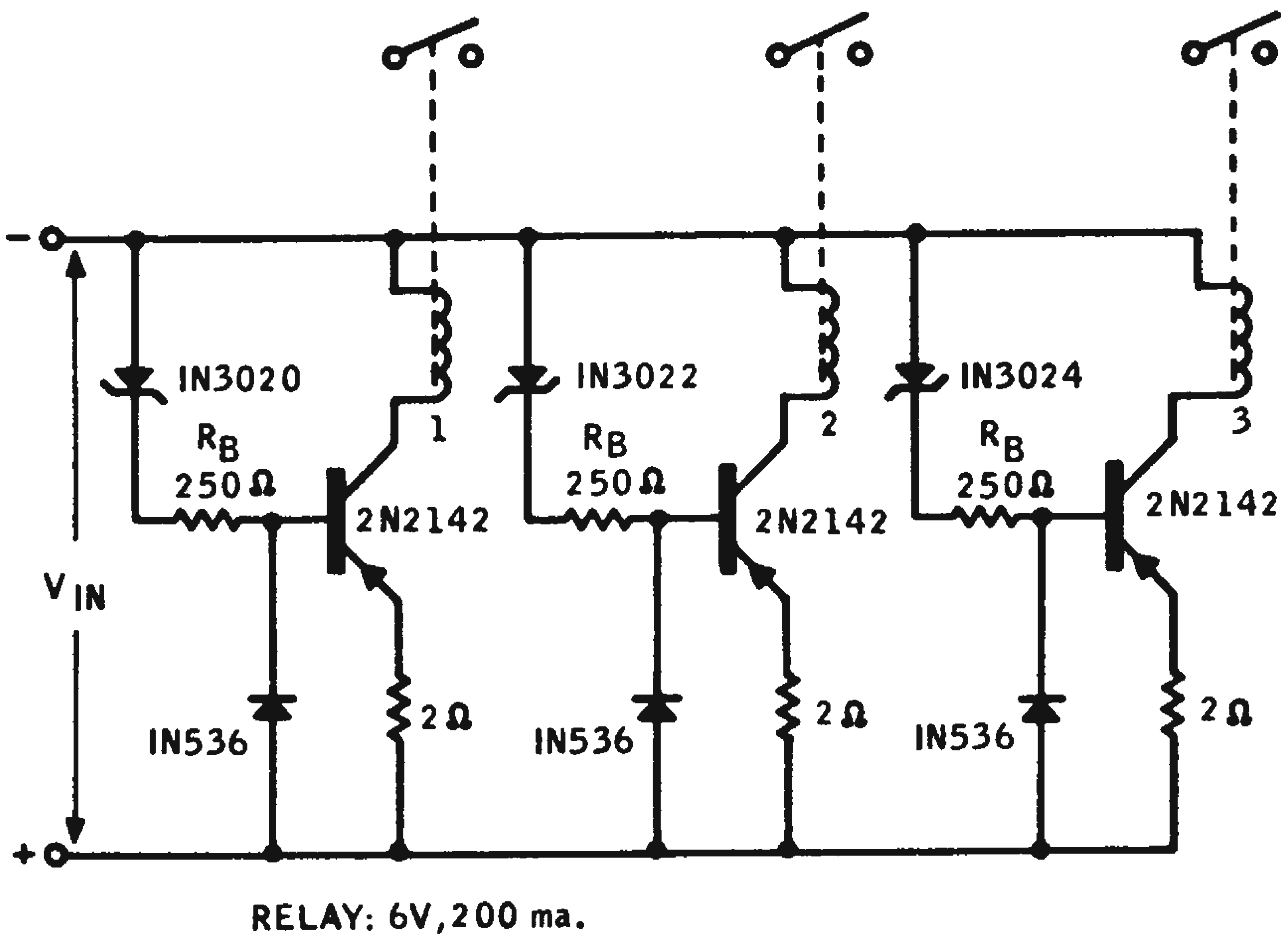

As V_{in} is increased beyond 10, 12 and 15 v, relays 1, 2 and 3 are actuated in sequences.

(1N536) are such that the unit does not conduct until the voltage reaches a level of about 0.7 to 0.8 v. Typically, the base-emitter voltage of the transistor in the forward-biased condition is about 0.3 v. To cause the rectifier to conduct, the voltage drop across the 2-ohm resistor must be at least 0.4 v, corresponding to an emitter current of about 200 ma.

As the input voltage is raised enough to turn on the last relay, the current through the earlier relays normally would increase, resulting in excessive relay current through these stages. This increase, however, is held to a minimum due to conduction of the rectifier which clamps the emitter current to a predetermined level.

As the number of relays in such a system increases, the power dissipation of the transistors, which are controlled by the lower voltage Zeners, increases because of the higher collector-emitter voltages, and heat sinking must be provided.

The circuit shown has the advantage of rapid turn-off when the input voltage falls below the Zener control voltage since all base drive is then eliminated. This provides positive turn-off as the input voltage drops below the initial turn-on level.

J. D. McCall, engineer, Motorola Semiconductor Products, Inc., Phoenix, Ariz.

Low Current Steps High Current Stepping Switch

In operating large stepping type switches a large current is often required, particularly for low voltage units. Furthermore, if the stepper must be operated from a remote location, there may be an objectionable voltage drop in the connecting wires.

The current shown in Fig. 2 does away with the need for a high current power supply, and uses relatively small cable wire between the control and operating switch positions.

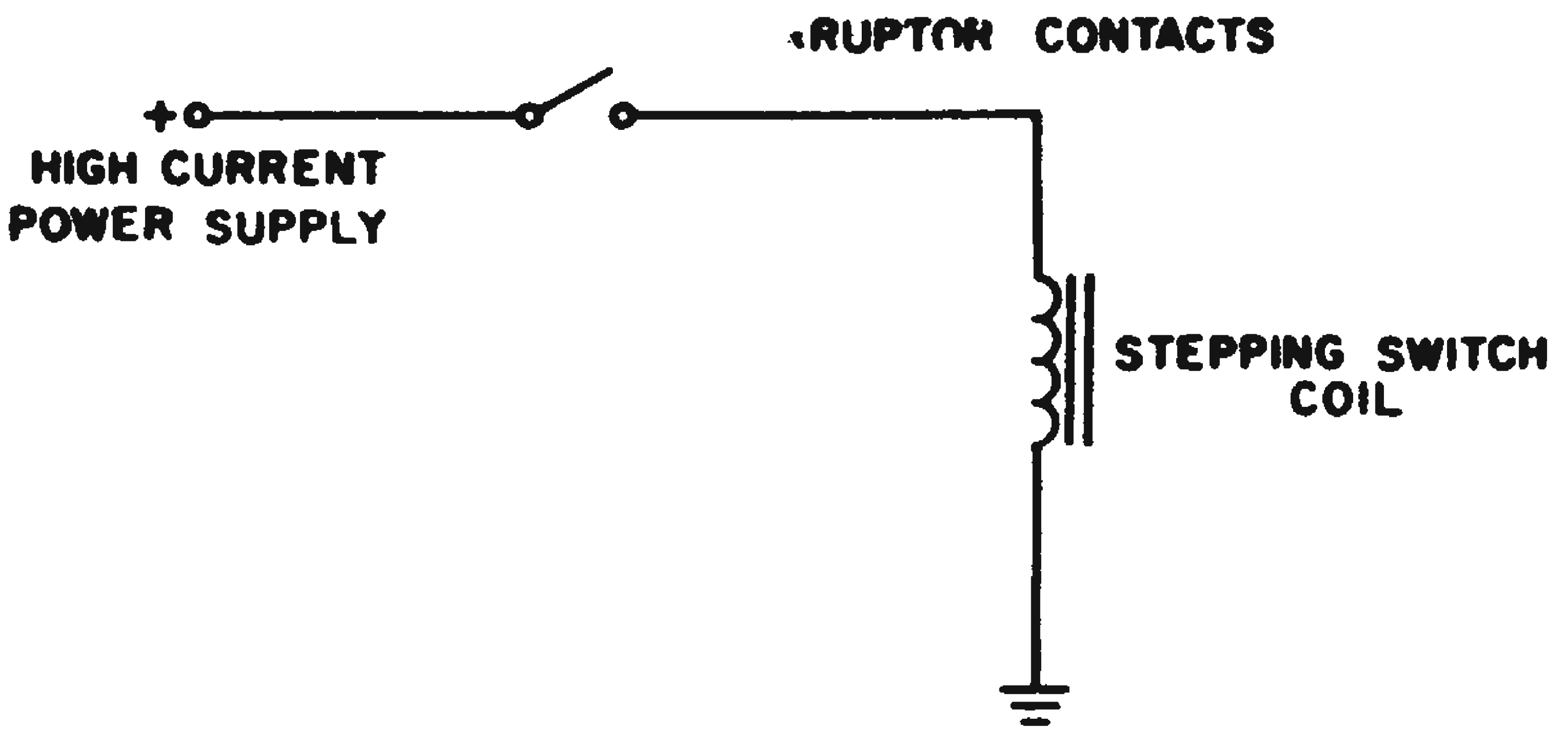

Fig. 1. "Old" circuit requires a high current power supply to directly feed the stepping switch coil.

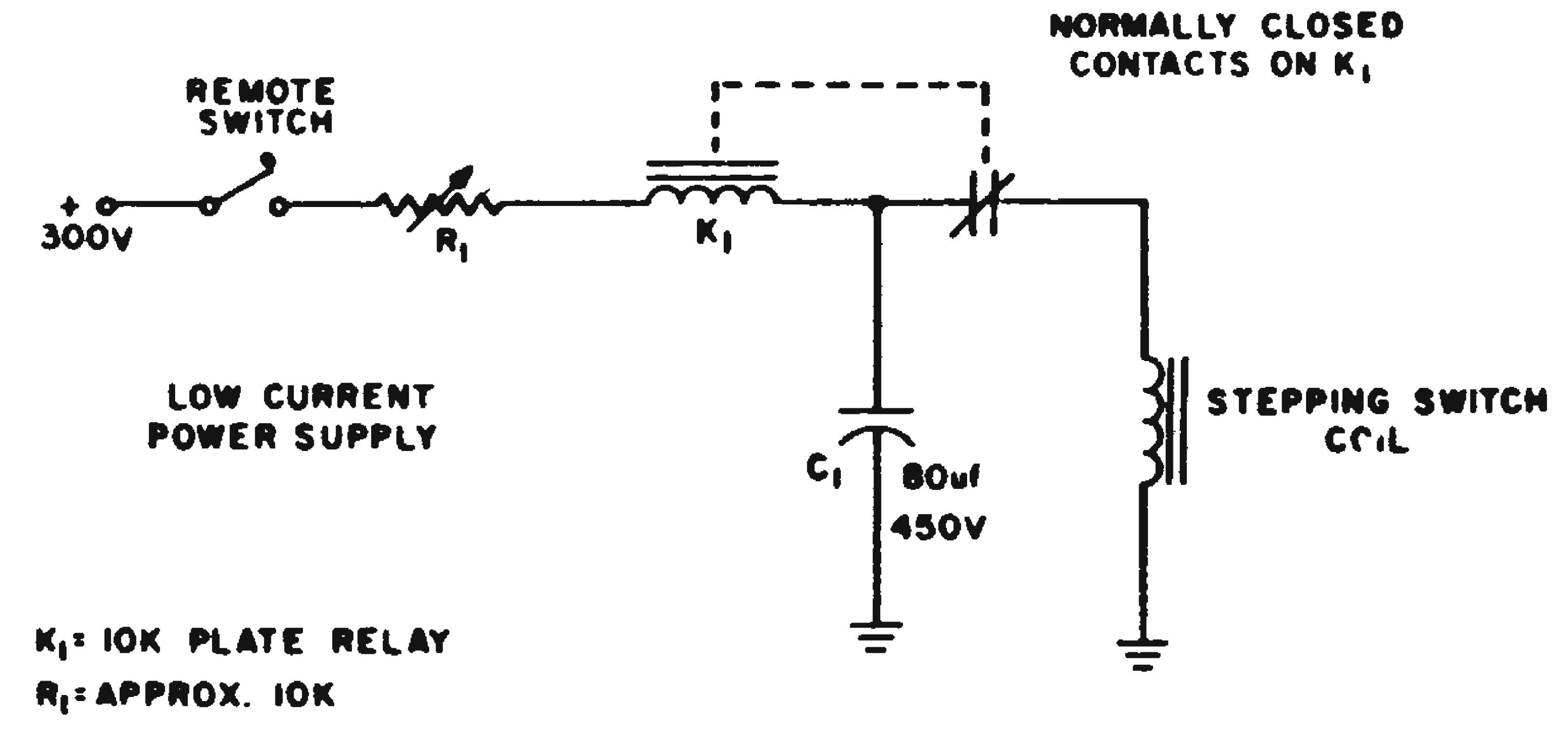

Fig. 2. The stepping switch is operated by the discharge current of capacitor C, in this "new" circuit. Hence, only a relatively low current supply is required.

When the remote switch is closed, the charging current capacitor C_1 is large enough to cause relay K_1 to operate. As C_1 charges, the current will decrease until the fall-out point of K_1 is reached. The relay again operates, closing the normally closed contacts. This causes C_1 to discharge through the stepper coil, advancing it one position. The time required for the operation is determined by the values of R_1, the dc resistance of K_1, C_1 and the pull-in, drop-out characteristics of K_1. It is possible to make the time constant variable according to a pre-arranged program by inserting the proper values of R_1 in one bank of the stepping switch, and stepping to a different value during each operation.

W. E. Barker, Jr., Systems Engineer, Systems Incorporated, Orlando, Fla.

Lamp Heating Time Speeds Relay Operation

Fast relay operation requires an overdrive current during the closing period and a comparatively small current before release. Reducing the operating current before opening also reduces the inductive back-voltage caused by interrupting the current.

The simple yet effective circuit illustrated utilizes the warming time of a lamp. When cold, the lamp has a low resistance and so allows more current to flow. The resistance of the hot lamp is several times higher and may be used to limit the relay current to the value required to keep the contacts closed. Fig. 1 illustrates the circuit, the addition of R_x would allow optimization of the relay currents.

Fig. 2 shows the variation of lamp resistance with voltage for a GE-47 lamp. The low-voltage region shows the lamp resistance at low temperatures (immediately after switching on). The intersection of this curve with the 50-ohm load line gives the operating point when hot.

Fig. 3 illustrates the variation of operating time with overdrive current using a 6-v 50-ohm relay. It should be remembered that the relay inductance will oppose the current initially and so increase the operating time above that calculated from the curves.

If a fast turn-off is required, the components should be chosen to supply the minimum turn-on current with a cold lamp and the minimum hold current with a hot lamp. Some advantage was noticed here since the hold current was only 20 per cent of the turn-on current.

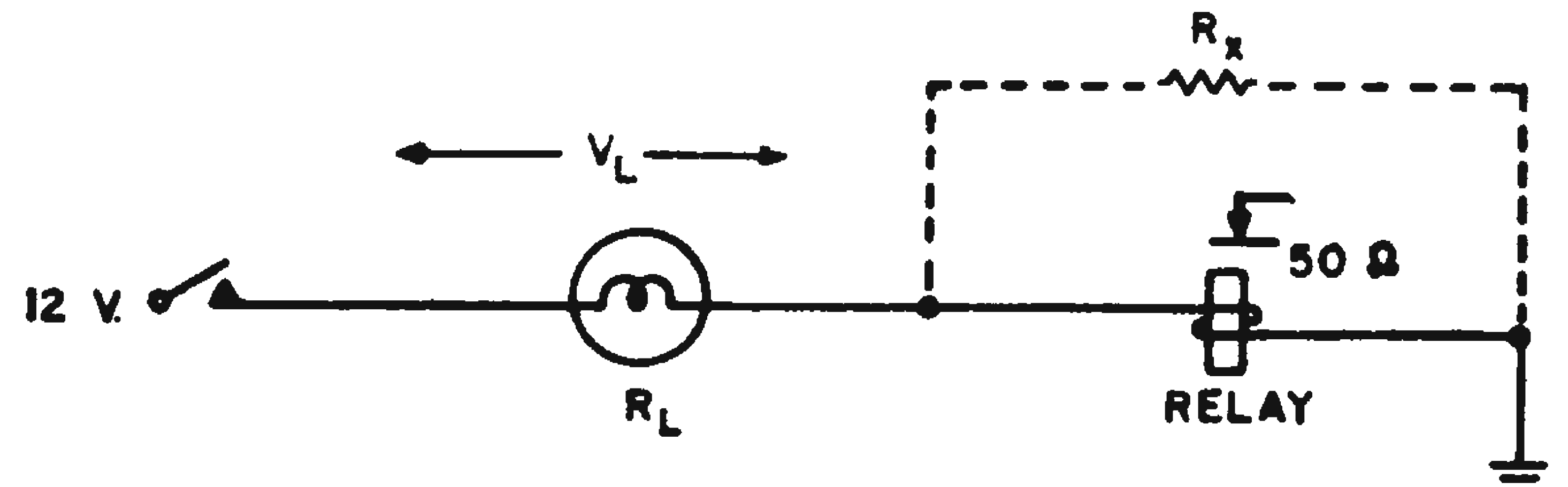

Fig. 1. Series bulb speeds switching of relay.

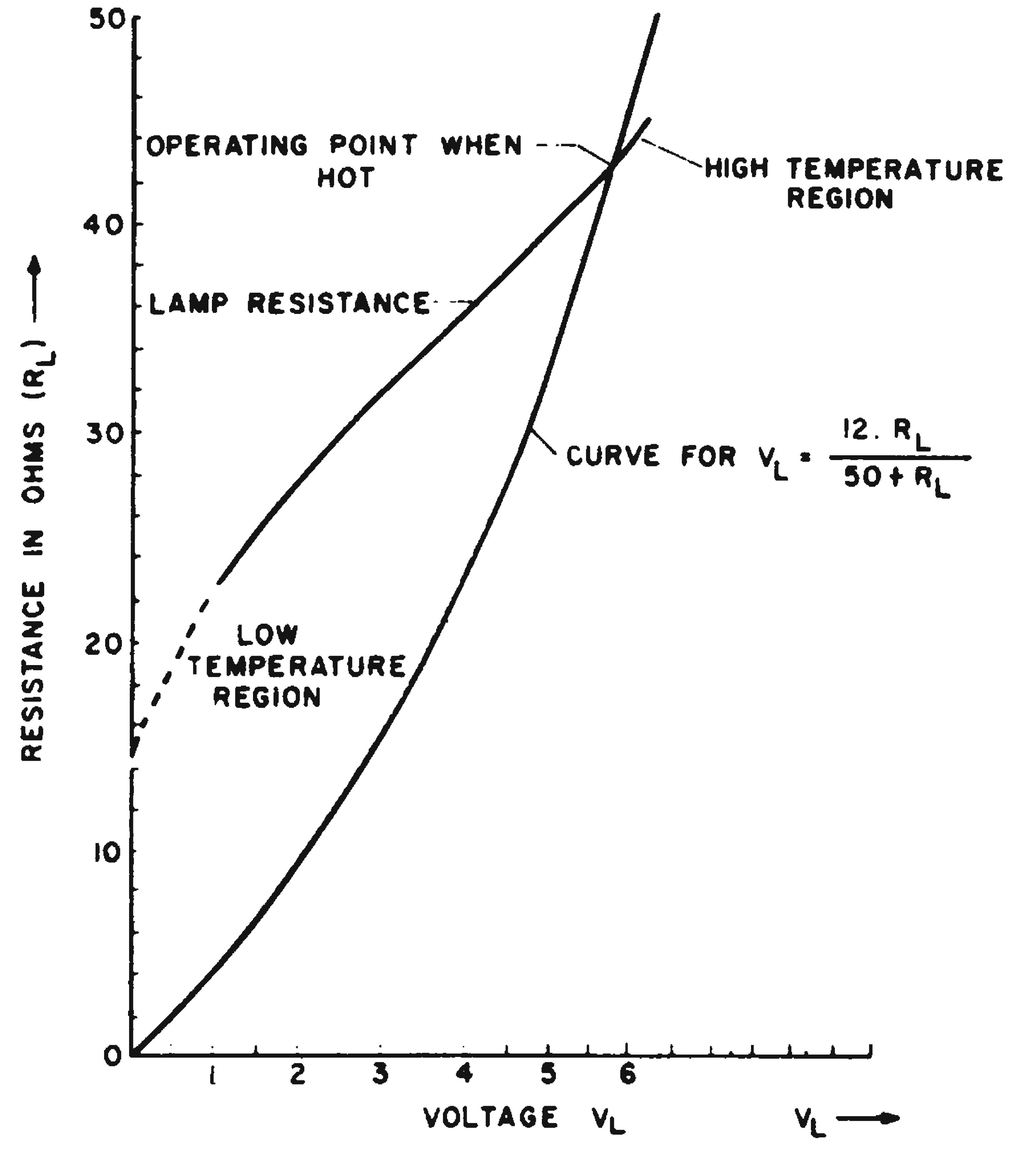

Fig. 2. Resistance variation with voltage for a type 47 lamp.

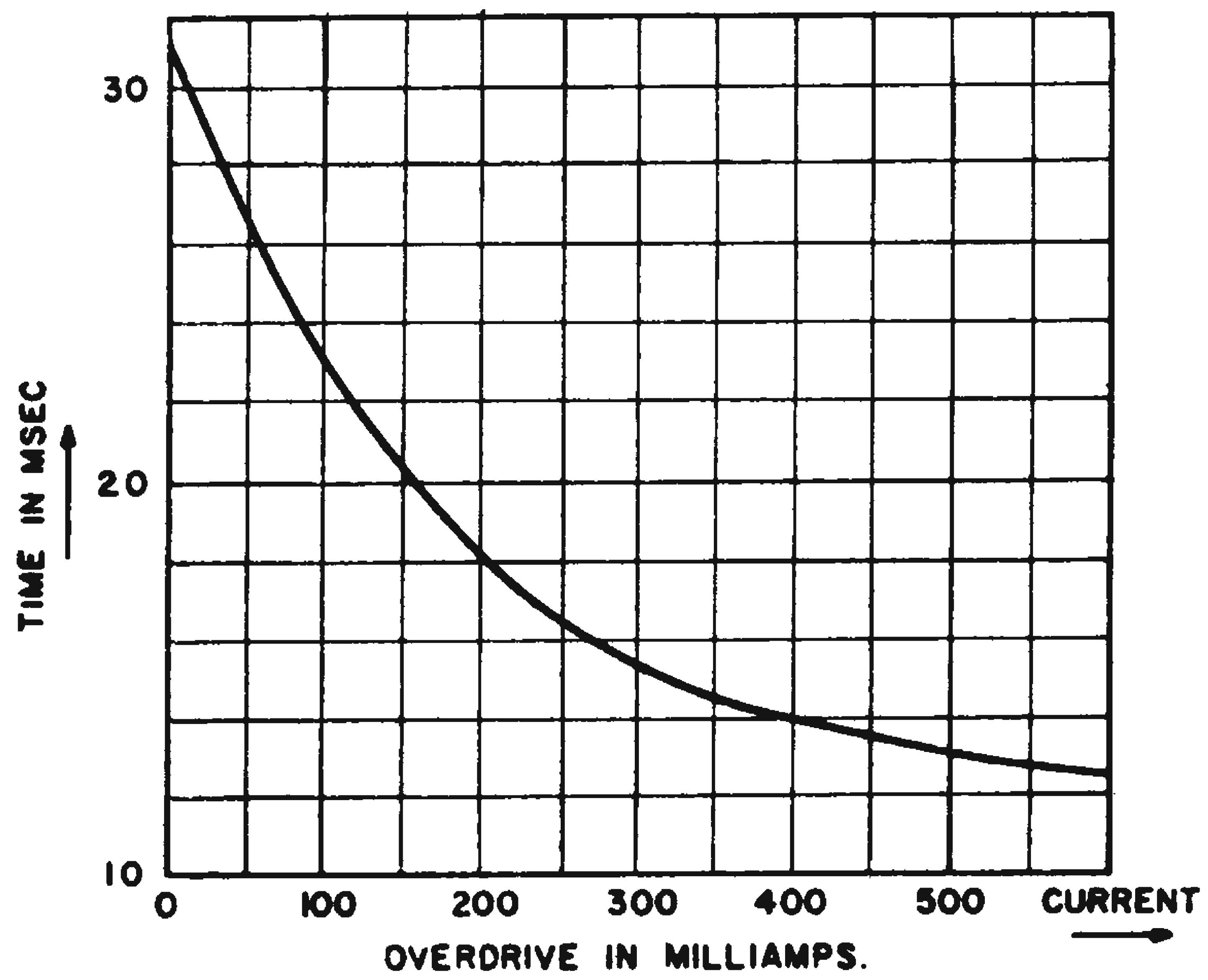

Fig. 3. Change in relay switching time with current overdrive.

The author has used the lamp to indicate relay operation and was able to dispense with the diode used to short out the inductive kick.

J. Revorg, supervising engineer, General Electric Co., Culver City, Calif.

Relay Sequencing Circuit Requires Minimum of Components

Relay sequencing circuits have numerous applications in automatic checkout equipment for missile systems. The circuit shown in Fig. 1 uses only one double pole-double throw relay and two diodes per stage.

When power is first applied to the circuit, pulses on the advance line cause no response. A start pulse applied to any relay will cause it to latch up through its own contacts. Thereafter pulses on the advance line will cause the next relay in the sequence to latch up and the previously energized relay to drop out. When the last relay is latched up, it remains in that state until power is shut off.

Diodes D_1, D_3, D_5 and D_7 are hold-in diodes to keep the previous stage relay on until the advance pulse is over. These are necessary to insure advancing only one stage at a time. Thus the only restriction on the length of the advance pulse is that it be long enough for reliable drop-out of the previous-stage relay.

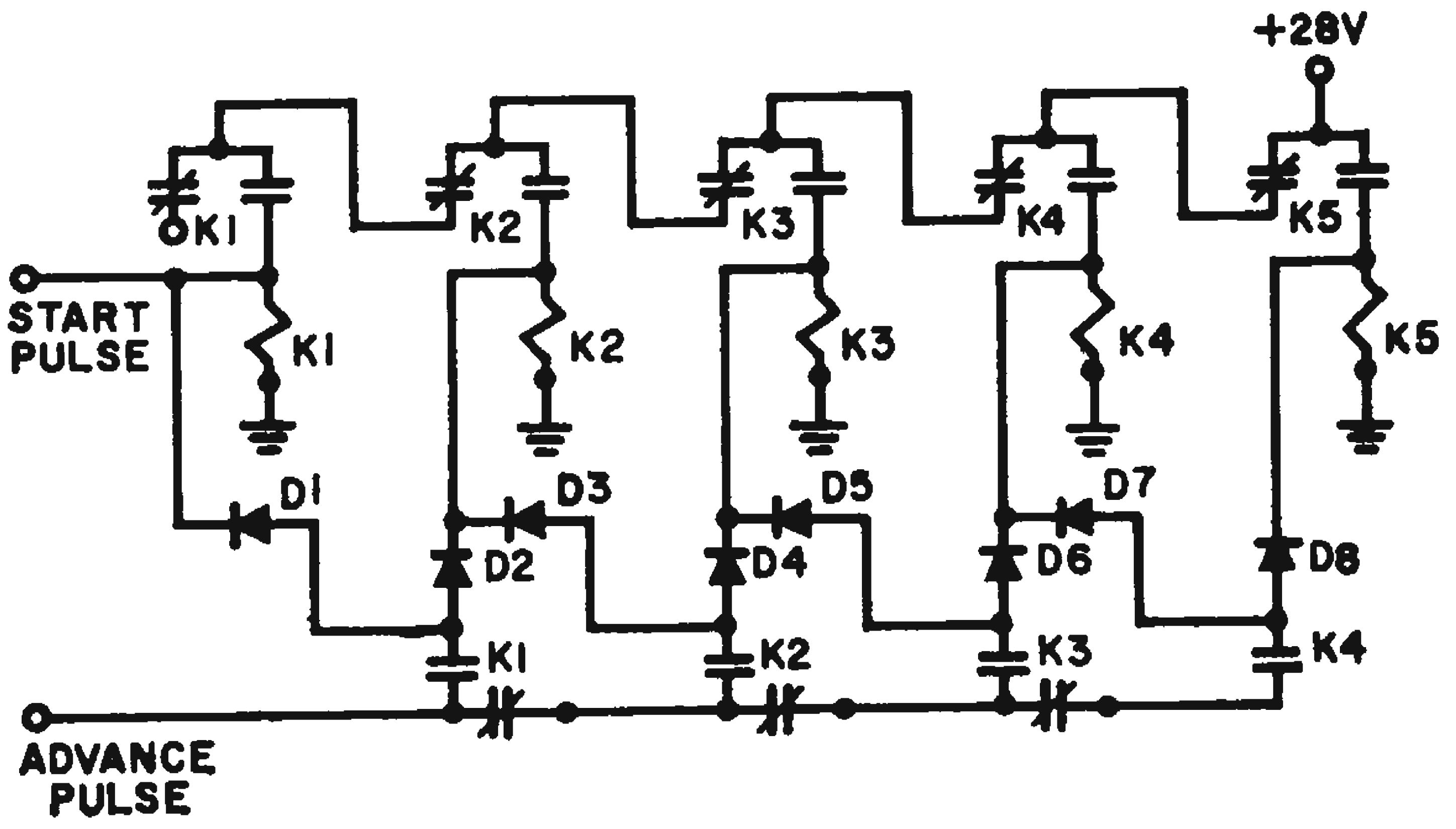

Fig. 1. Pulse on start line initiates sequence of relay operation controlled by advance pulses.

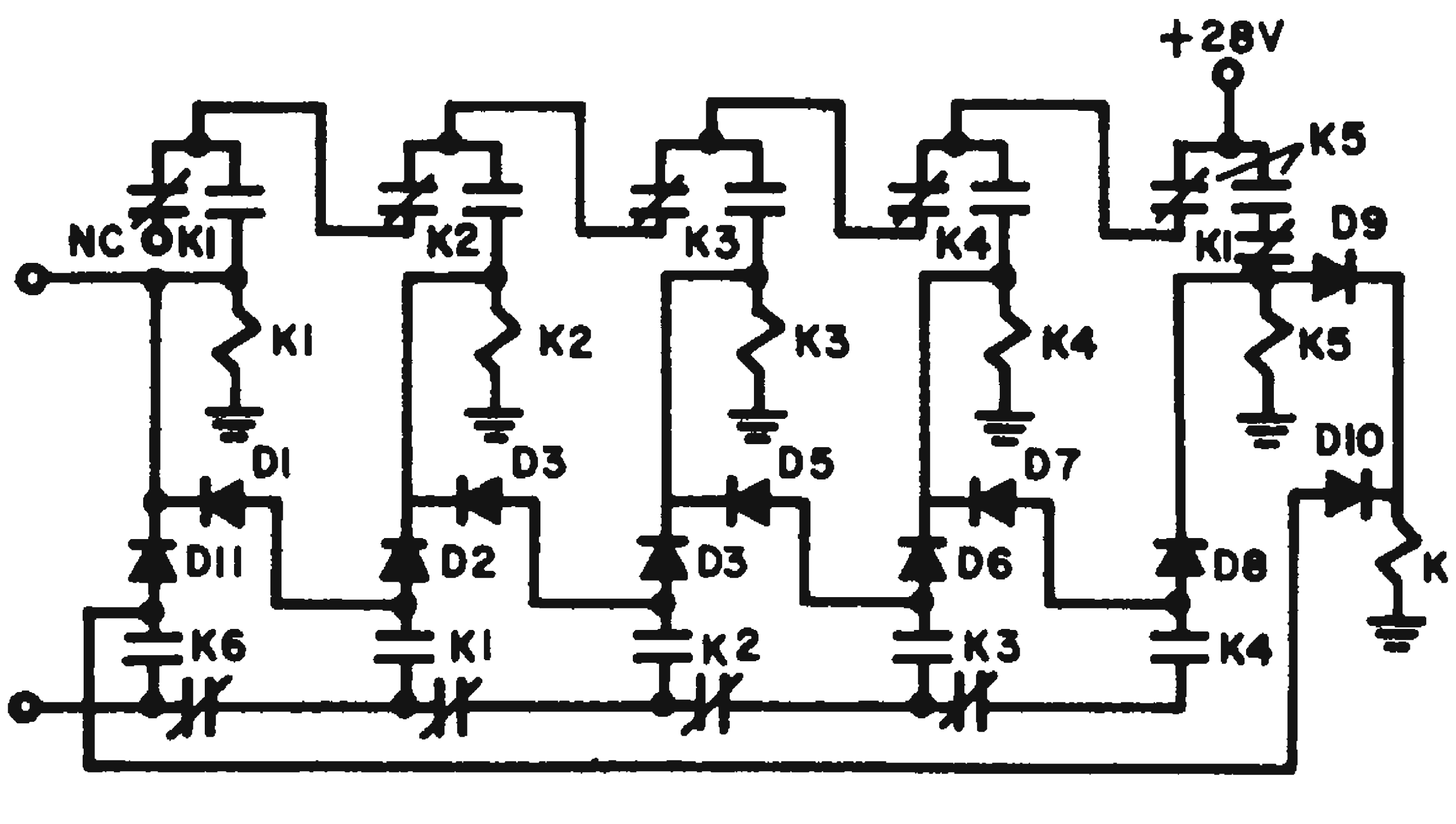

Fig. 2. Ring counter adaptation of sequence circuit requires addition of three diodes and one relay.

This circuit may be converted into a relay ring counter by making K_1 a three-pole relay and adding three diodes plus one relay (Fig. 2). K_6 serves the function of maintaining the advance pulse of K_1 while allowing K_5 to drop out to reactivate the latch-up line to the other relays.

B. H. Robinson, Martin Co., Orlando, Fla.

Tuned Relay Coil Switches at Low Current

A latching relay can be turned on and off without drawing current other then the initial surge. This is done by using a capacitor with the inductance and resistance of a latching relay to produce a near-critically damped circuit.

The choice of capacitor value is important. If the capacitance is too small, the circuit will be overdamped and the peak current will be too small to energize the relay. If the capacitance is too large, the circuit will be underdamped (or oscillatory) and upon completion of a half-cycle, the current will reverse, possibly latching the relay in the opposite direction.

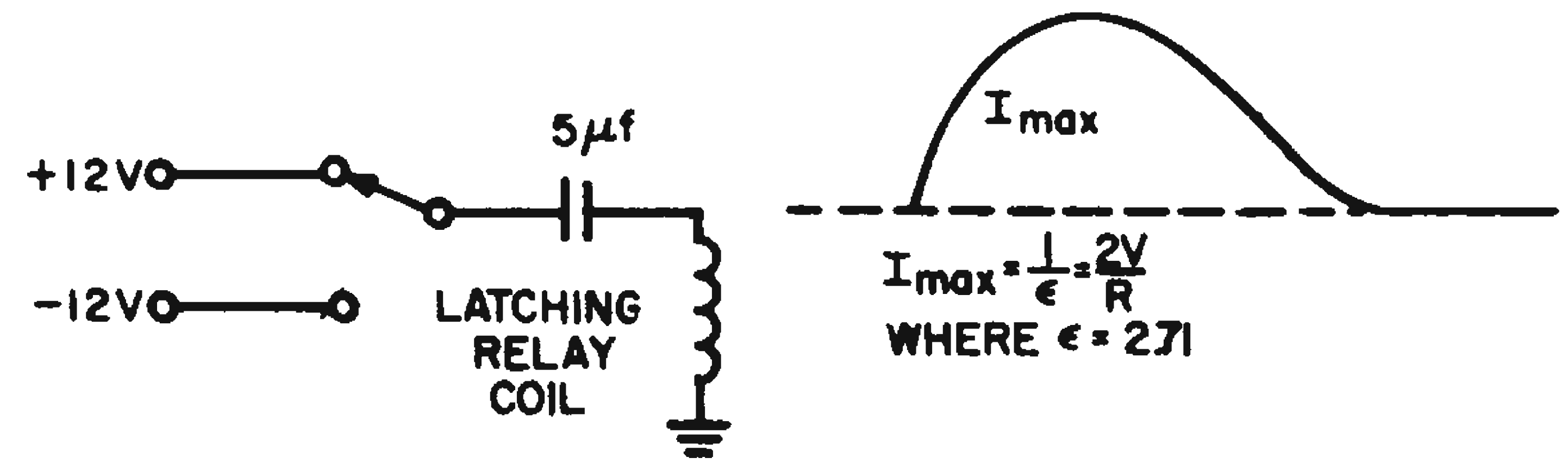

Critically damped relay circuit draws current equal to I_{max} when $C = (4L/R^2)$. Value of V is the voltage difference between the two power supplies and R is coil resistance.

In the practical application shown here, the resistance of the relay coil was 770 ohms and the inductance 680 mh. To find the critical capacitance: $C = 4L/R^2 = 4.56$ μf. A small amount of underdamping is permissible if the reverse current is insufficient to latch the relay in the opposite direction. For this reason a value of 5 μf was chosen.

H. R. Weiss, engineer, General Electric Co. Utica, N. Y.

Unijunction Oscillator Insures That Power Converter Will Start

In the design of static power-conversion equipment, high efficiency and short-circuit stability can be achieved by biasing the transistors so that they can assume a stable non-oscillatory state, (cut-off at zero bias). However, such a converter usually can be started only by applying a step function input. A solution to this problem is shown in the circuit diagram where a separate oscillator using a unijunction transistor is added.

This type of oscillator works on the relaxation principle and therefore has no stable non-oscillatory state, even at very low temperatures. The circuit constants are chosen so the unijunction oscillation frequency is about a tenth of the normal power-converter frequency. When the base potential of the unijunction transistor reaches its "firing" point, the energy in capacitor C_1 is discharged through the winding on the drive transformer T_1. This current pulse provides the required starting drive. Once the power converter has begun oscillating, power is coupled back into the unijunction circuit causing it to "idle" in synchronism with the main oscillator.

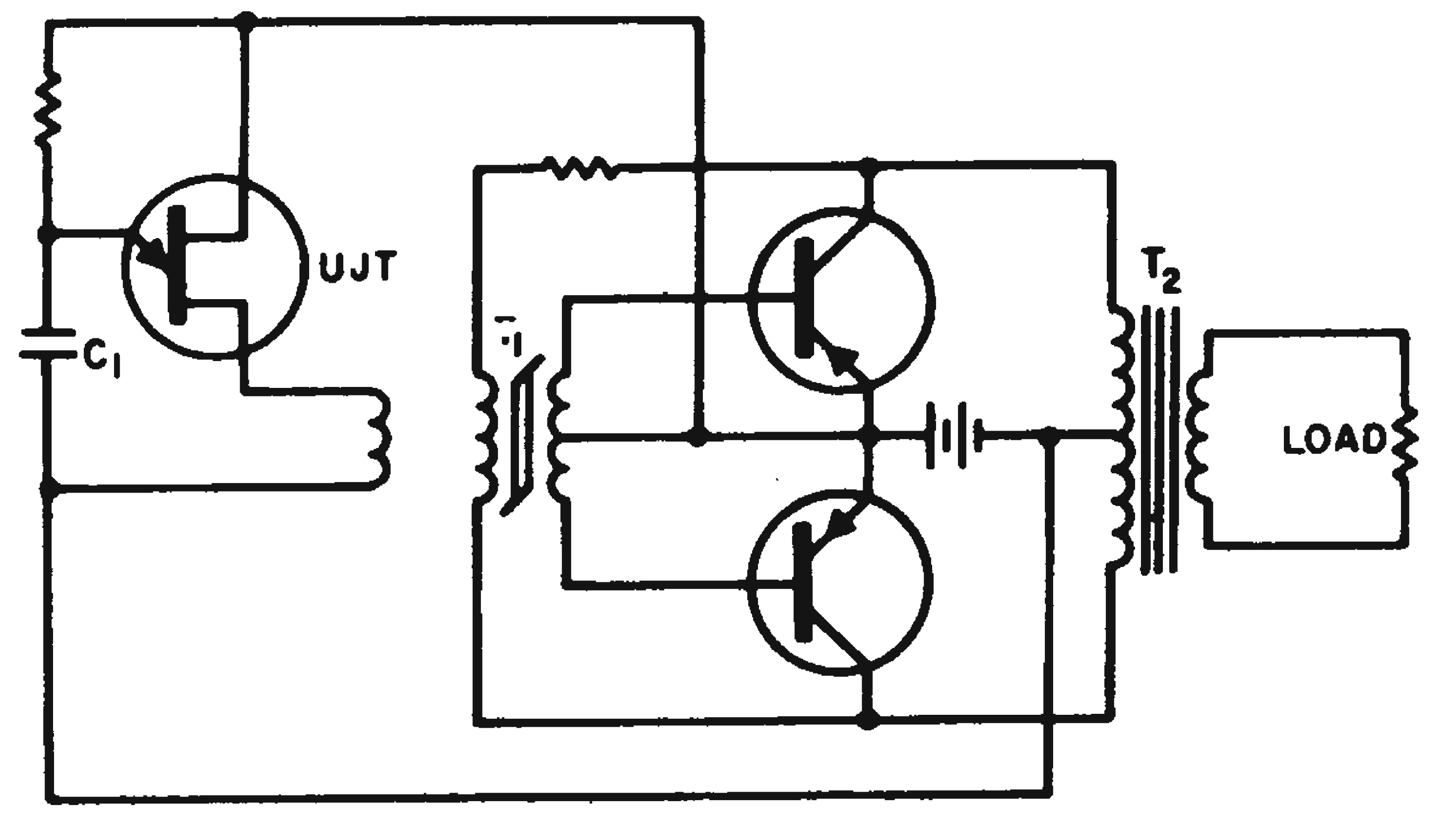

Current pulse from unijunction relaxation oscillator insures starting of power converter.

This circuit has been used successfully in units delivering up to 200 w from a 28-v dc source over a temperature range of −65 to +85 C.

Thomas P. Prouty, senior electronics engineer, MHD Research, Inc., Newport Beach, Calif.

DC Relay Draws Extremely Low Current

There are many uses for a relay that draws no current from the signal source, and there have been many approaches for obtaining infinite resistance in such a relay.

Here is a circuit for this purpose that uses the extremely high inverse resistance of a 56-pf voltage-variable silicon capacitor. The dc control voltage tunes the tank circuit C_1-C_2, L_2 in which the capacitor C_2 is the voltage-variable element. A unit may be selected with inverse resistance of several thousand megohms, which means that the signal current it draws is virtually zero.

The tank circuit is powered by a link-coupled 27- to 30-Mc rf oscillator, which need supply only about 2 mw for good reliability and thus can use a single transistor or tunnel diode.

Inductor L_2 (approximately 0.6 μh) is tuned by means of its slug to the low side of the oscillator frequency, in the absence of a dc signal voltage. A 1-v signal will tune the circuit to resonance, diode D will rectify the rf tank voltage and the 50-microampere dc relay will close. When the dc signal is removed, the relay will open.

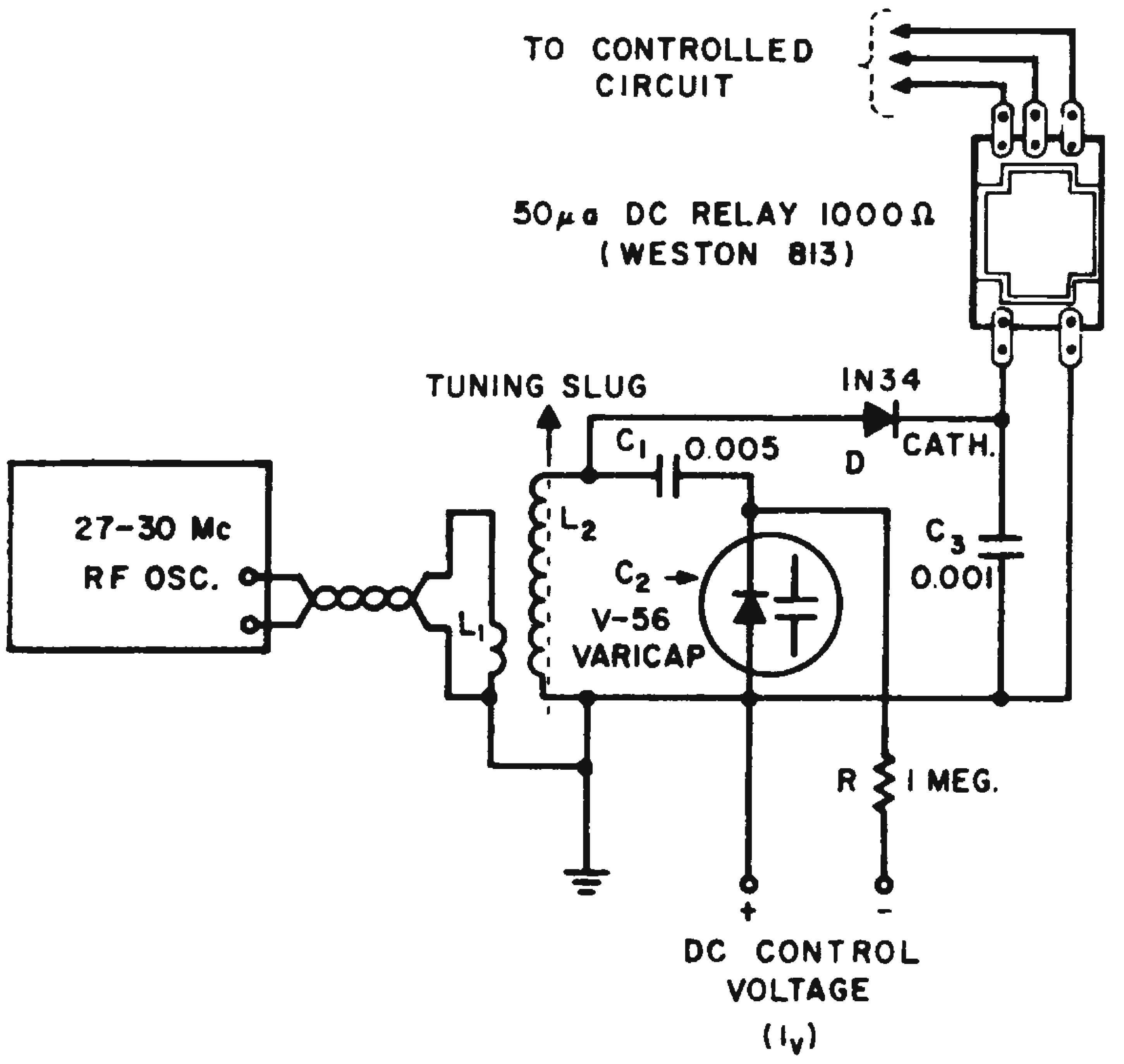

Relay circuit uses high inverse resistance of voltage-variable capacitor to provide operation at extremely low current levels.

Rufus P. Turner, consulting engineer, Altadena, Calif.

Biased Reed Relays Recognize Polarity

Using reed relays, we have devised two simple methods for polarity recognition, each with single lead control. One method uses two relays to provide isolated, three-lead output. The second method uses one relay to give non-isolated, three-lead output.

The reed relays have normally open contacts. Where normally closed contacts are needed, a small permanent magnet is placed in proximity with the reed capsule. Energizing the relay coil with polarity opposite to that of the permanent magnet will neutralize the field of the magnet and open the normally closed contacts. This assumes, of course, that the coil field is strong enough to neutralize the field of the permanent magnet, but no so strong that the contacts will reclose.

If the coil and magnet are designed with proper strengths, the normally closed contacts will open before the normally open contacts close.

The permanent magnet is oriented so that when the start terminal of the coil is grounded and the finish terminal is positive, both the normally open and the normally closed contacts operate.

If a negative battery is applied to the finish of the coil, only the normally open contacts will operate. This is because the polarities of both magnet and coil are in the same direction. This simple principle can be applied to single-lead control.

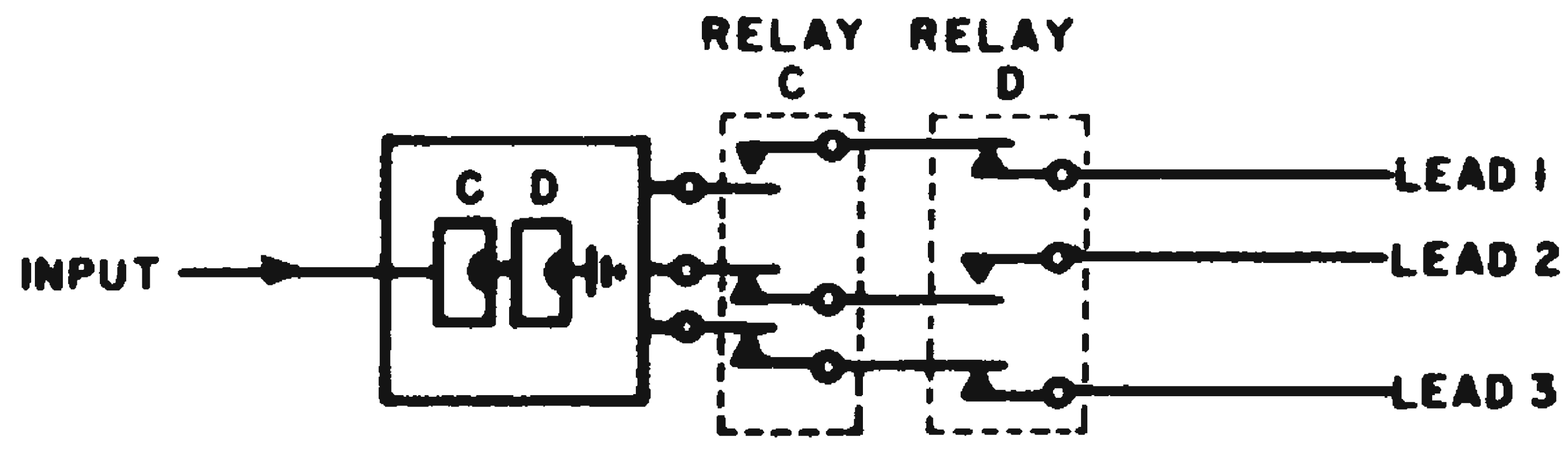

Fig. 1. Two reed relays provide polarity identification with isolation of outputs.

By arranging two reed relays as shown in Fig. 1, we can recognize positive, negative or ground inputs on isolated leads. Each relay has one normally open and two normally closed, with the biasing magnets arranged to give the following conditions:

Lead Polarity	Relay C Contacts NC	Contacts
positive	closed	closed
negative	closed	open
Gnd.	open	closed

Relay D	
NA Contacts	**N Contacts**
closed	open
closed	closed
open	closed

With negative potential on the single lead input, output is over lead *1*. Positive input produces output over lead *2*. Lack of potential (ground) input registers output on lead *3*. False signaling will not occur as long as the normally closed contacts operate before the normally open contacts do.

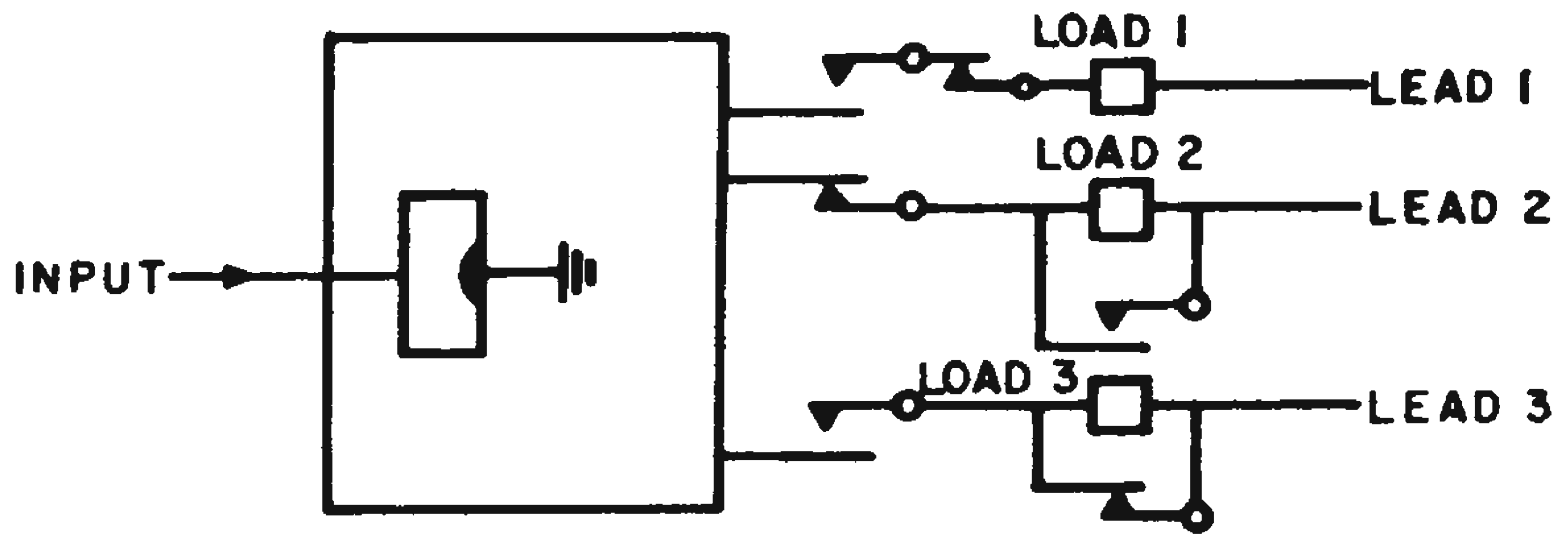

Fig. 2. One relay provides polarity recognition but does not provide isolation.

Fig. 2 shows how polarity recognition can be accomplished with only one relay. In this circuit, isolated output is sacrificed; the relay contacts must be associated with a load on two of the three output leads. The relay, with *3* normally open and *3* normally closed contacts, responds to input polarities as follows:

Lead Polarity	NA Contacts	NB Contacts
+	closed	open
–	closed	closed
Gnd.	open	closed

With negative potential applied to the input of the single relay circuit, a load output is created on lead *1*. Positive input creates load output on lead *3*, and ground input provides load output on lead *2*.

Using the selective contact characteristics of reed relays, the above circuits or variations can provide circuit flexibility and component economies.

R. K. Else, project engineer, Automatic Electric Labs., Northlake, Ill.

Full-Wave SCR Relay Gives Undistorted Output

Full-wave SCR control circuits do not provide 100 per cent conduction, since a portion of the cycle is used to develop the gating signal. The following circuit is a true full-wave SCR relay which, once triggered, provides a vertically undistorted sine-wave output. It has been used to start and stop a 117-volt, single-phase, 1/3-hp induction motor.

Fig. 1 shows a simplified version of the circuit. When SCR Q_1 is gated into conduction, current flows from the ac line through the load and L_1. Shunt silicon rectifier CR_1 acts as a voltage limiter. At the end of the positive half cycle, Q_1 stops conducting and the field of L_1 begins to collapse.

This produces a pulse of opposite polarity to the gate of Q_2, causing it to conduct. Since this pulse is applied at the instant that the polarity reverses, there is no lost conduction time. This circuit requires triggering of Q_1 at the beginning of every cycle to obtain full-wave output.

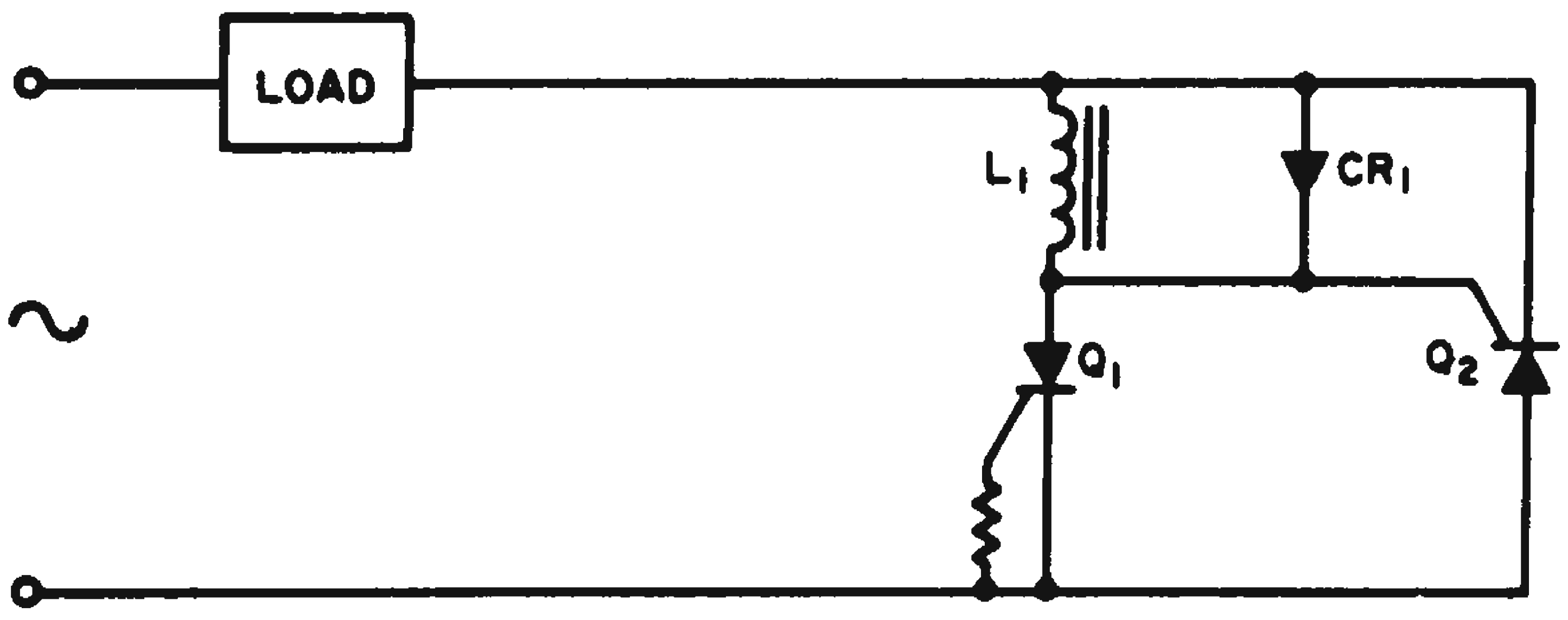

Fig. 1. Inductor L_1 provides pulse to turn on Q_2 at instant of ac polarity reversal.

Fig. 2 shows a version of the circuit that can be triggered into full-wave conduction. An inductor-rectifier combination is connected in series with each SCR, and cross-coupled to be mutually triggering. Thus, if Q_1 is turned on, it compels Q_2 to conduct during the following half cycle. Q_2 then causes Q_1 to continue conducting during the next cycle.

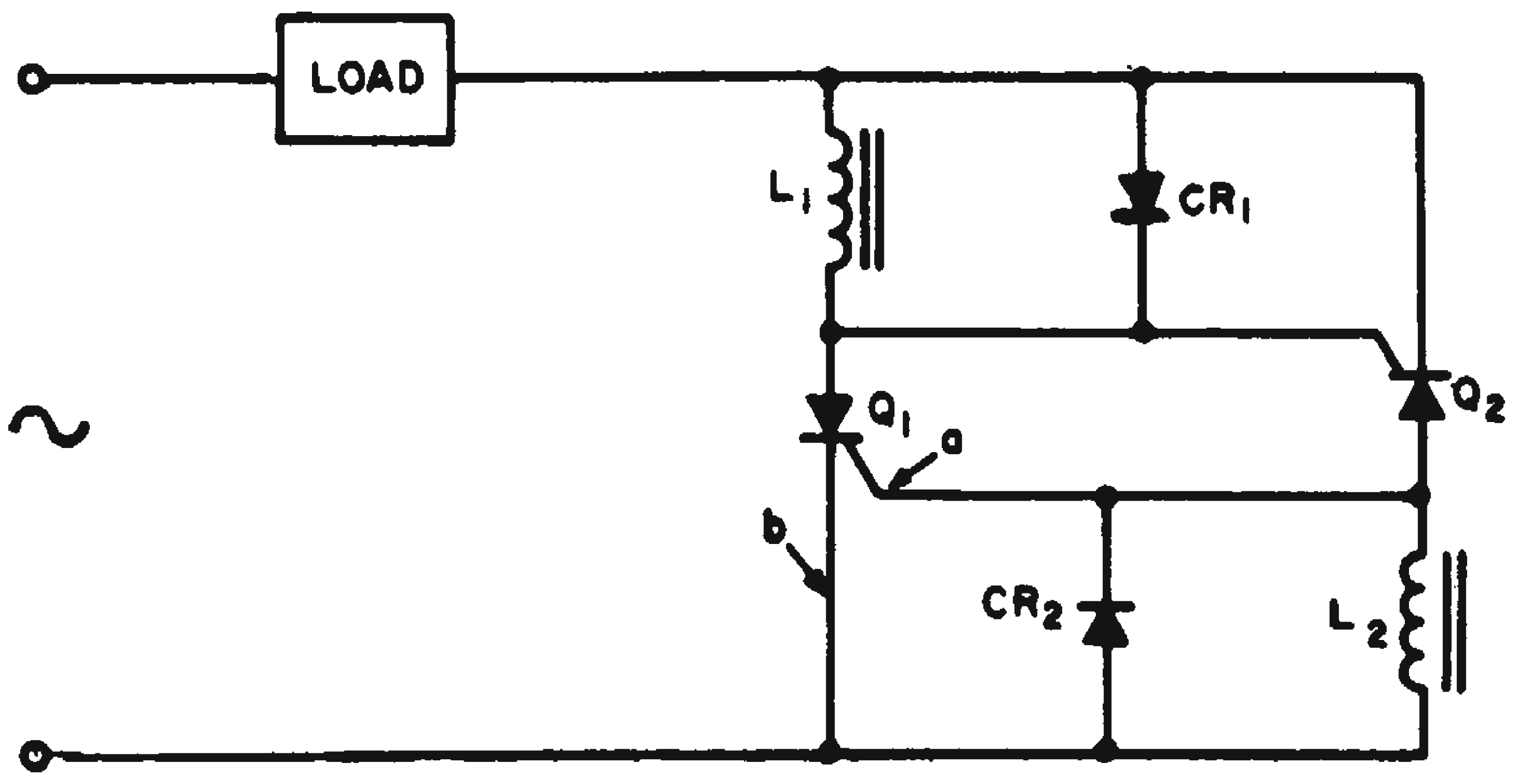

Fig. 2. Cross coupling of two inductors causes alternate turn-on of control SCRs.

The relay can be turned off by interrupting SCR anode current. Opening or shorting the gate circuit of either SCR will also turn the circuit off. However, the duration of the OFF pulse must be at least half cycle if synchronized, and one cycle if not. One technique has been to connect a pnp transistor from point *a* to point *b*, and discharging a capacitor into the base of the transistor.

The series rectifiers must be rated to pass full-load current. The value of I_1 is not critical. The low impedance winding of an iron-core audio transformer has been found satisfactory.

W. E. Dion, electronics project engineer, A. G. Russell Co., Inc. Bristol, Conn.

Constant Percentage Gate Operates Over Wide Range

This circuit was evolved for applications calling for a marker with essentially constant percentage width and controllable position; the sweep voltage could vary over a 20 per cent frequency range. The constant percentage width permits a CRT presentation with the controllable marker appearing in the same position with the same width, for all values of the sweep frequency.

The circuit functions as follows: A sweep signal from a low-impedance driver (such as an emitter follower) is applied to the common transformer winding connection; a reference voltage, E_1, and offset reference voltage, E_2, are derived from the emitter resistor of the constant-current emitter follower pair, Q_1 and Q_2. These voltages reverse-bias diodes CR_3 and CR_4.

The circuit makes use of the equal but opposite polarity transformer windings L_1 and L_2. When the reference level is reached by the sweep, CR_3 conducts and a voltage step $e = L_1\ di/dt$ is induced in L_1; here di/dt is a constant due to the constant slope of the sawtooth input. This step is transformed through the turns ratio *n* to the common secondary, L_3, and appears as a positive voltage $e = nL\, di/dt$.

When the offset reference-level diode CR_4 conducts, a negative step voltage $e = nL\, di/dt$ is superimposed on the original positive step. This drives the output to zero, resulting in the generation of a gating signal whose width is determined by the difference between E_1 and E_2, and whose position is determined by the setting of E_1.

Zener diodes CR_1 and CR_2 maintain adequate level separation to prevent "run-off" of the marker for the end of the sweep. Q_3 serves as a high input-impedance amplifier, while direct-coupled emitter-follower Q_4 yields a low-impedance output point to drive the following circuits. The rise and fall times are functions of both sweep speed and transformer characteristic. Where these are not fast enough, addition of a Schmitt trigger yields appropriate waveshaping.

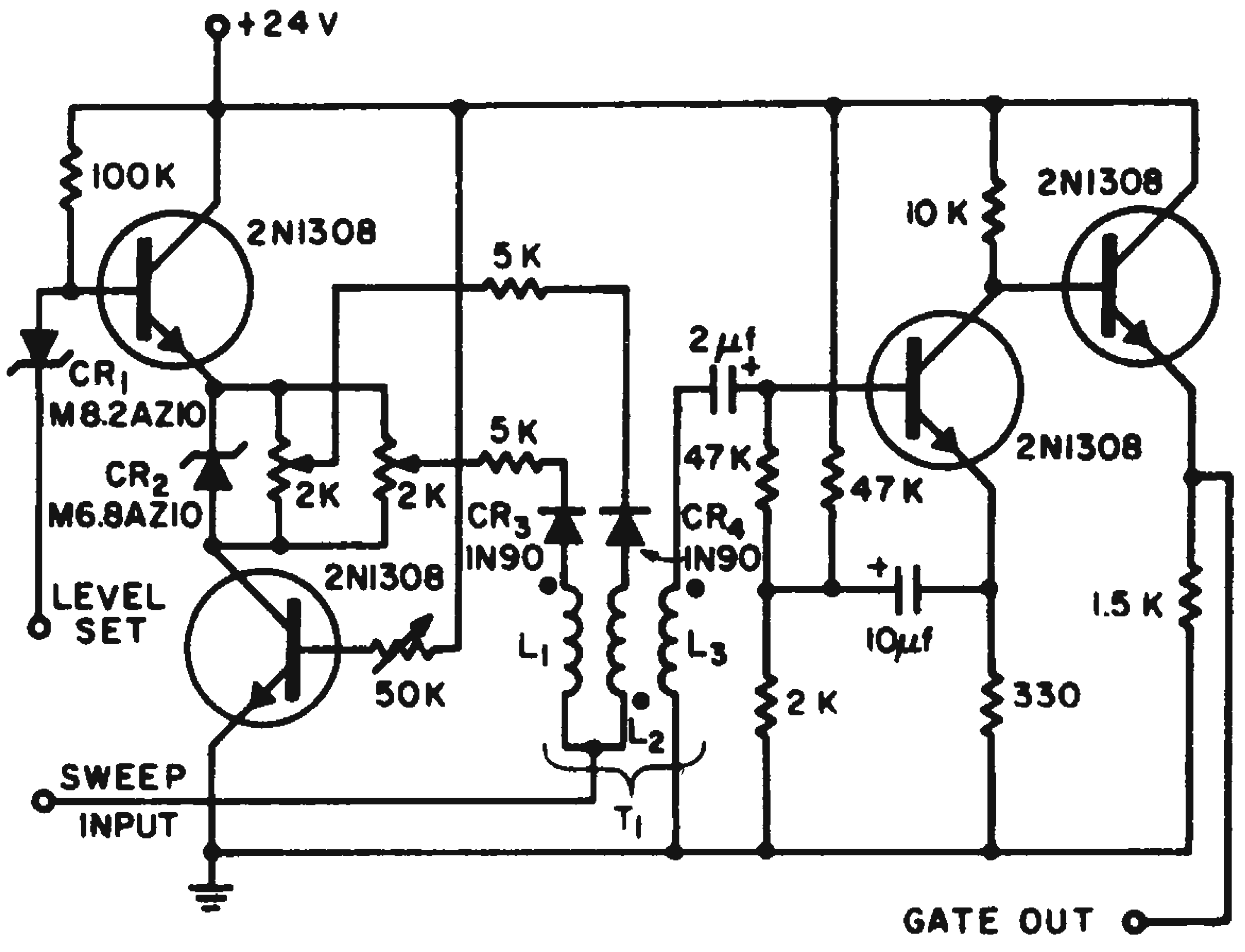

Gating circuit provides constant percentage output determined by difference in voltages E_1 and E_2.

The transformer used should have a high-frequency response consistent with the sweep speed and rise times desired. Primary impedance should be low enough to prevent excessive reactive effects on the step transient, and the low-frequency response must be consistent with the maximum gate width. The same gating principle may be applied to extended sweep ranges by use of audio transformers for low frequencies and blocking oscillator transformers at high frequencies.

The circuit constants shown in the figure are those utilized in a 25-to-30-cps sweep circuit. For this, the DOT-37 transformer is very satisfactory, since it has a center-tapped 2K and 8K secondary with a 20-cps to 20-Kc frequency response.

V. J. Kanesni, principal engineer, Melpar Inc., Falls Church, Va.

Delayed SCR Turn-On Eliminates Contact Bounce

Current and voltage fluctuations caused by bounce of switch or relay contacts can be prevented from reaching the load by a simple delayed electronic contactor using an SCR. Application of power to the load is delayed by the time required to charge a capacitor to the firing voltage of the SCR. If the delay is longer than the settling time of the contacts, the load will see a clean power step with a rise time of about 1 μsec.

In the circuit shown, the switch contacts bounce for about 7 msec and the SCR begins to conduct about 3 msec after the switch contacts settle in the closed position. The kick from inductive loads should be clamped by a diode across the load or suppressed in some other manner.

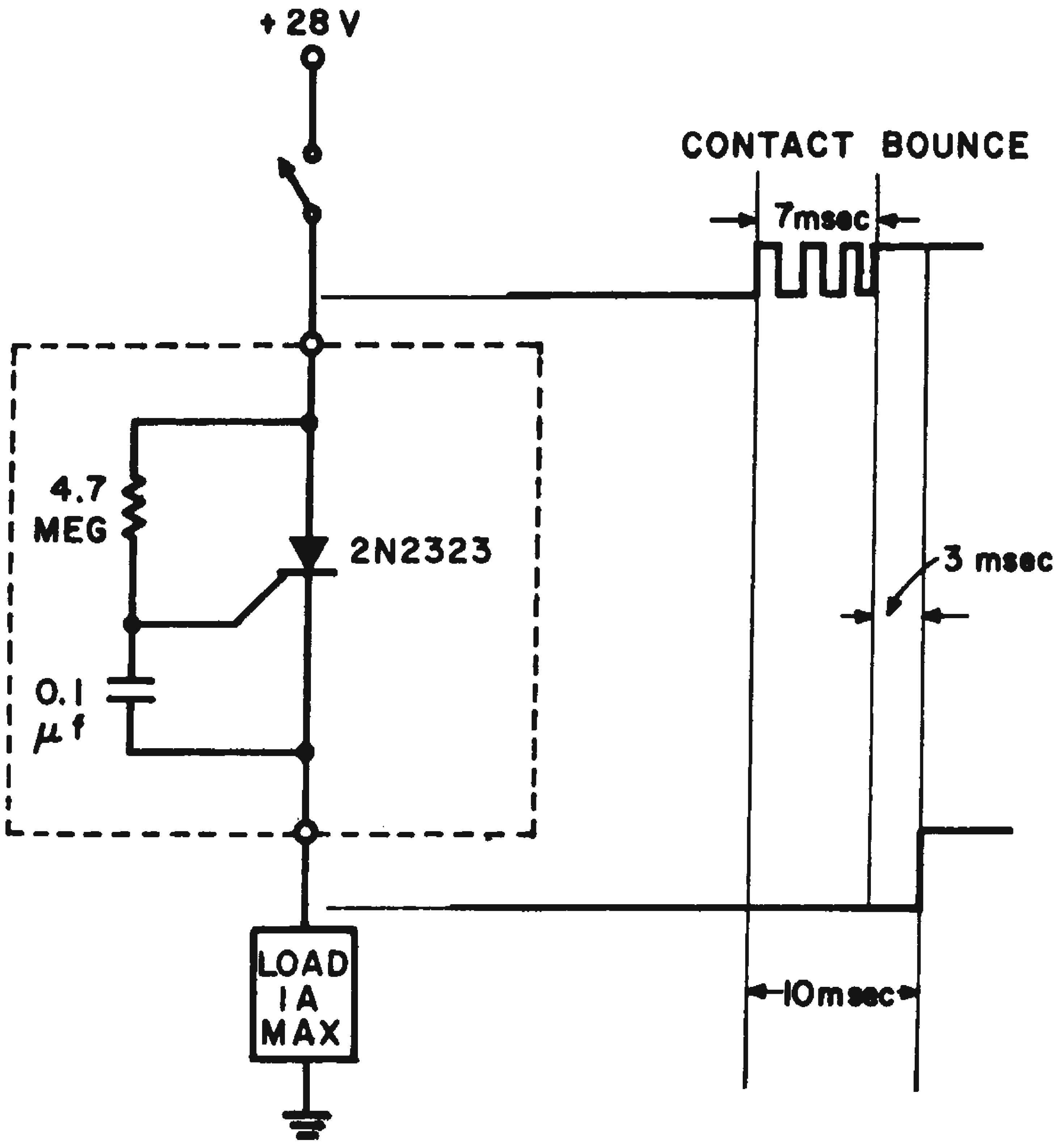

Turn-on delay of SCR prevents power application until after switch contacts stop bouncing.

By cascading several such circuits, a sequencing scheme is possible. The amplitude of the outputs is progressively smaller, due to the forward drop of the SCR. The time delay of each stage may be proportioned for a particular application.

Andrew Balint, design engineer, Bell and Howell Co., Chicago, Ill.

Transistor Ignition System Improves Engine Performance

The transistorized ignition system shown here was designed to reduce maintenance cost and improve performance of an automobile. A novel feature of this circuit is that with two switches and by moving the high-voltage cable from HV_1 to HV_2, the conventional ignition system is returned to operation. The present system has been used on a 1960 Oldsmobile for over 1000 miles with excellent results.

The two steady-state conditions of the ignition points will be considered to give a functional description of the system. When the points are open, a minute current (about 0.001 amp) flows from the battery, through the ballast resistor, the emitter-collector elements, ignition coil primary to the battery negative potential. Since the ballast resistance and ignition coil have a combined resistance of only 1.25 ohms, the transistor terminals represent a resistance of 12,000 ohms. When the breaker points are closed, the collector current rises to approximately 8 amp. Under these conditions the transistor terminals represent a very small (0.25 ohm) resistance. The steady-state conditions have been used only for illustrative purposes. The voltage developed across the coil is dependent on the rate of current change with respect to time. The significant point is that by switching the base circuit open and closed, the heavy current is carried by the transistor and not the breaker points.

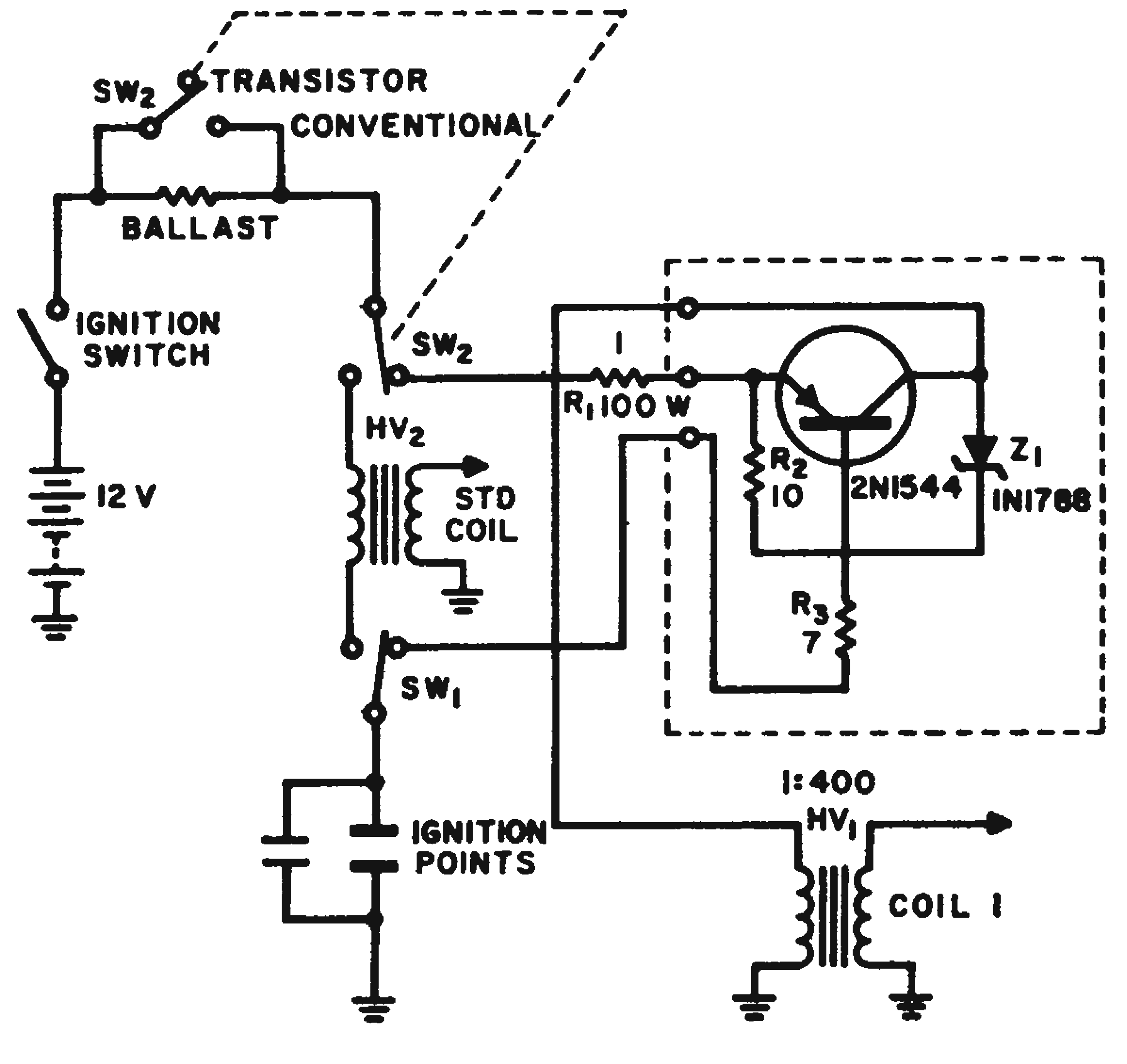

Single-transistor ignition system permits easy changeover to conventional system.

The measured current density through the points was reduced by approximately 1/15 of the current density of the conventional ignition system. The current density with the conventional system was 324 amp/sq in., as compared with 20 amp/sq in. for the transistorized system.

It is estimated that breaker point life should be increased to about 75,000 miles. The length of the spark does not drop off at high speeds as in the conventional system, thus providing better high-speed performance.

J. Nawracaj, research technician, Amphenol-Borg, Chicago, Ill.

Flip-Flop Switch Eliminates Contact Bounce

When a manual switch is used to generate a logic signal, contact bounce can be eliminated by using a spdt switch to short-circuit one transistor of a flip-flop. Changing the switch position causes the flip-flop to change state. It will remain in that state until contact is made to the collector of the opposite transistor. The illustration shows the switch connection for two popular bistable designs.

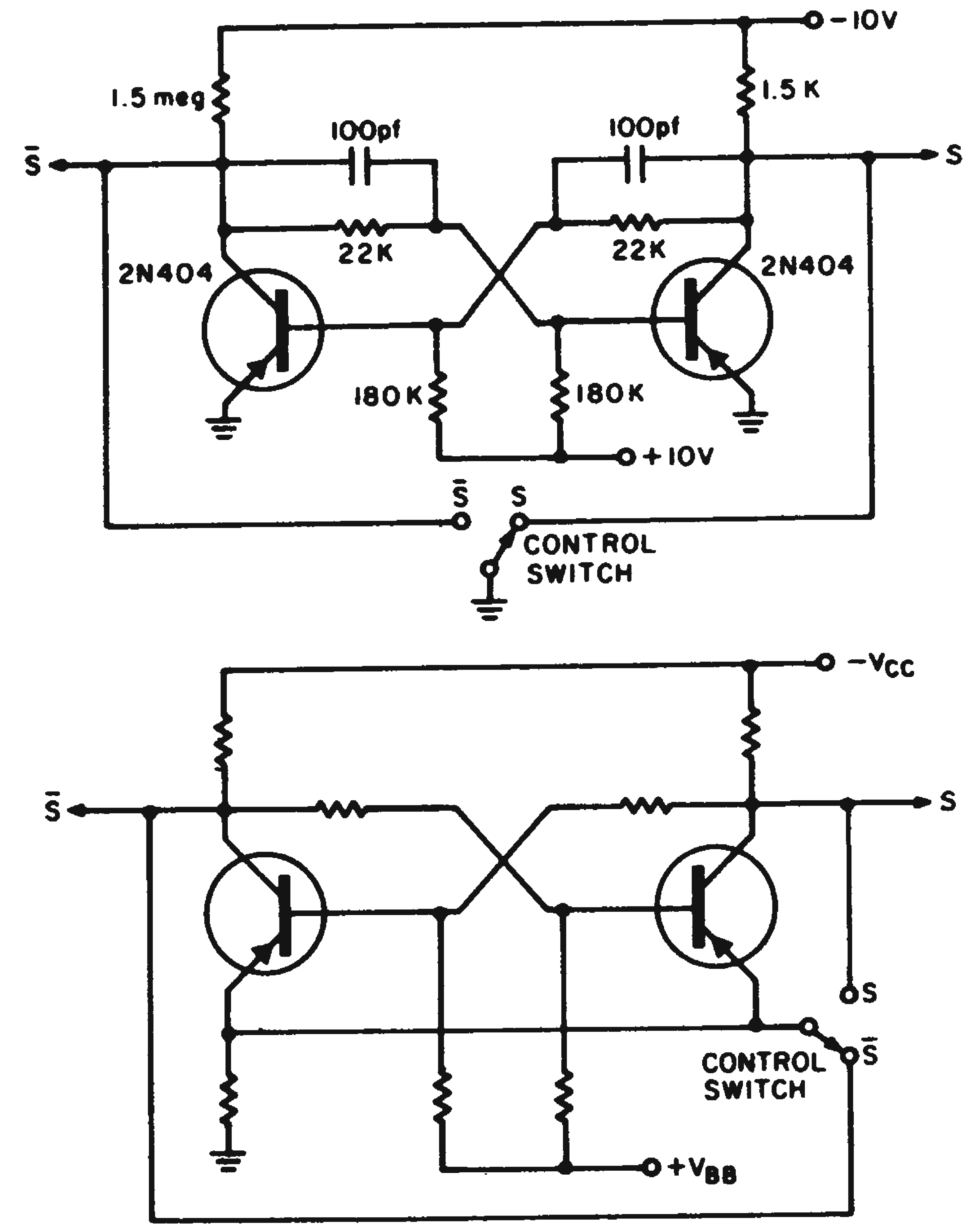

Flip-flops can be used to obtain bounce-free manual switching by spdt switch used to ground one transistor.

Bruce Ross, research engineer, The Boeing Co., Seattle, Wash.